EN 64100152 V01

QUICK INSTALLATION GUIDE

SMILE-B3-PLUS

01 Product Overview

(1). Wi-Fi Port
(2). Backup&Grid Connector
(3). Communication Ports
(4). Battery Breaker of Inverter
(5). Grounding
(6). INV LED Display
(7). Battery LED Display
(8). Battery Breaker
(9). Battery Power Switch
(10). Battery + Power Connector
(11). Battery - Power Connector
(12). BMS COM Ports

Dimension(W×H×D):640×725×250mm

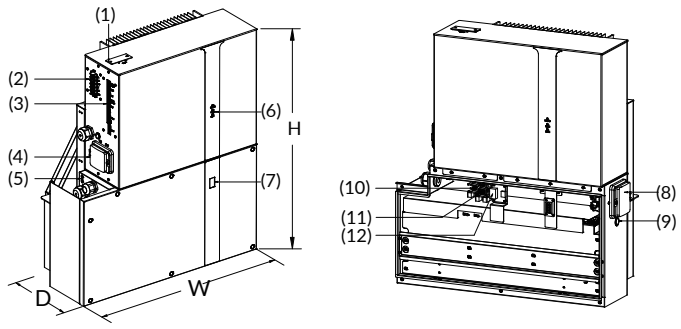

02 Packing List

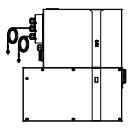 (X1)	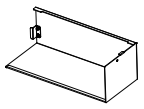 (X1)	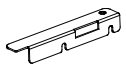 (X2)	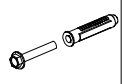 (X6)	 (X7)	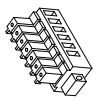 (X1)	 (X1)
 (X2)	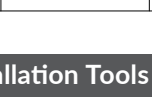 (X1)	 (X1)	 (X1)	 (X1)	 M4*12(X10) M5*10(X2) M6*16(X6)	 (X1)

03 Installation Tools

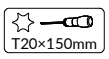 T20 Screwdriver	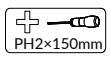 Phillips Screwdriver	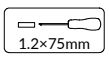 Flat-Head Screwdriver	 Wire Stripper
 Network Wire Clamp	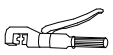 Crimping Plier	 Tape Measure	

04 Mount the Product

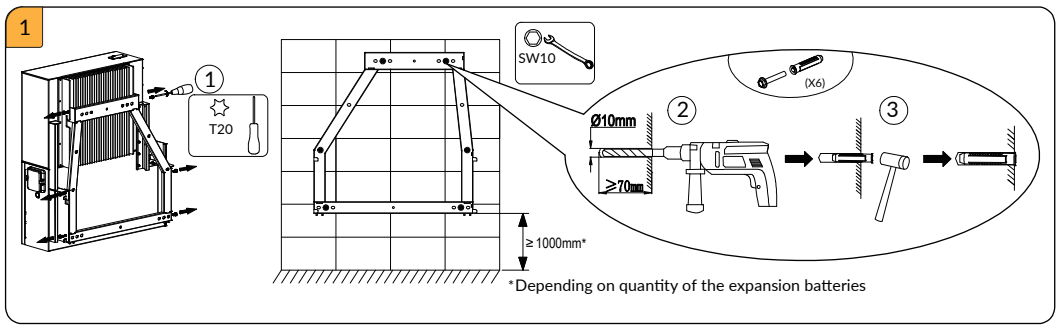

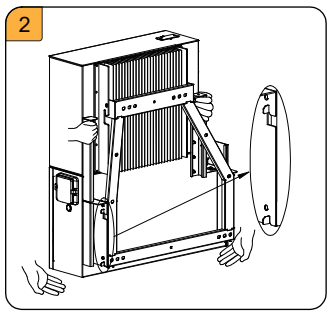

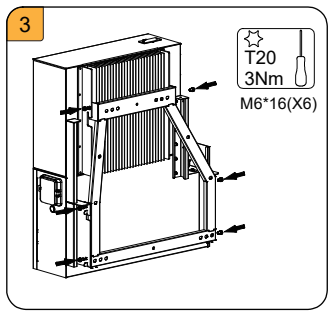

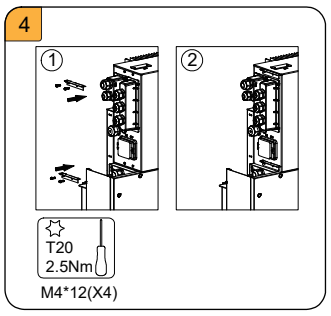

05 Electrical Connections

RISK OF ELECTRIC SHOCK

Before doing electrical connection,please ensure the PV switch & all AC and BAT circuit breakers are switched OFF and cannot be reactivated.

DANGER

You must protect each inverter with an individual grid and backup in or-der to ensure that the system can be disconnected safely.

Description	Breaker Specification
Grid Side	40A
Backup Side	25A

NOTE:
Please see System Wiring Diagram for detailed system wiring.

5.1 Mount the PE cable

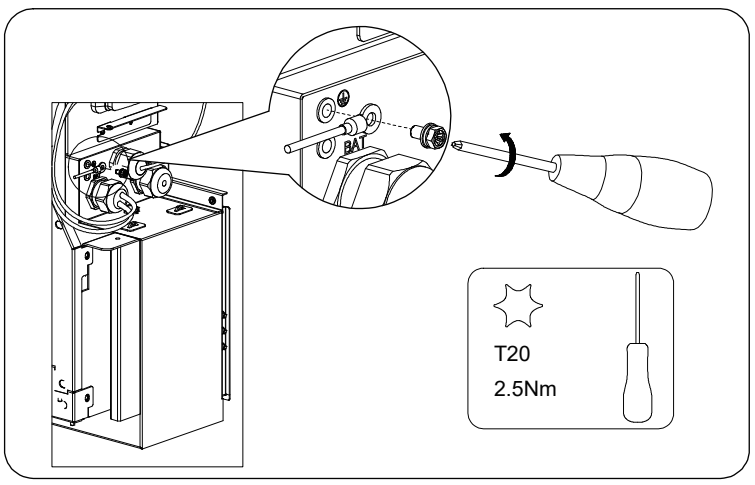

5.2 Connect to the Backup / Grid Power Cable

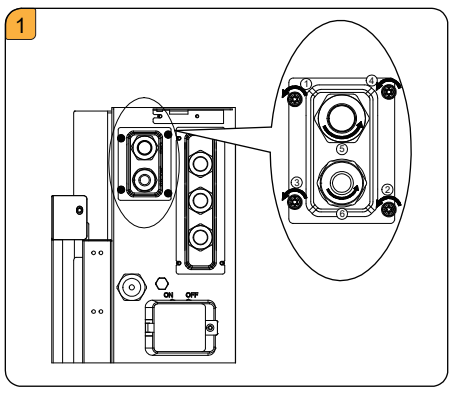

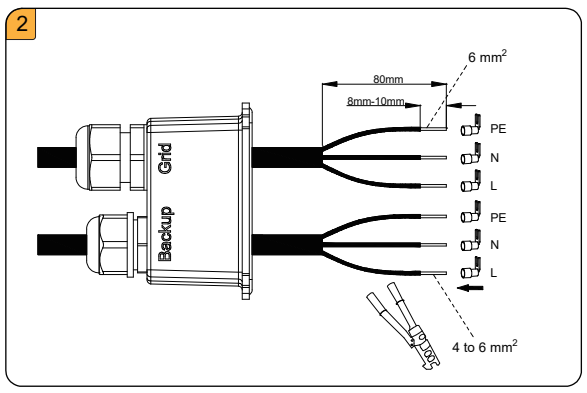

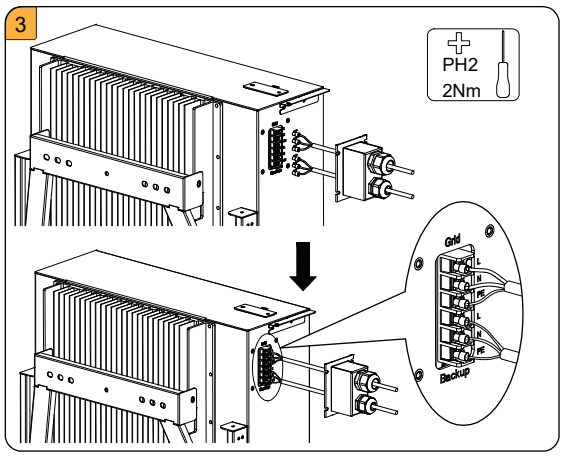

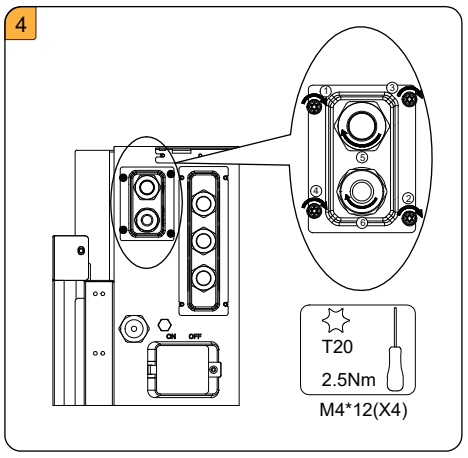

06 Communication Connection

6.1 Wi-Fi Connection

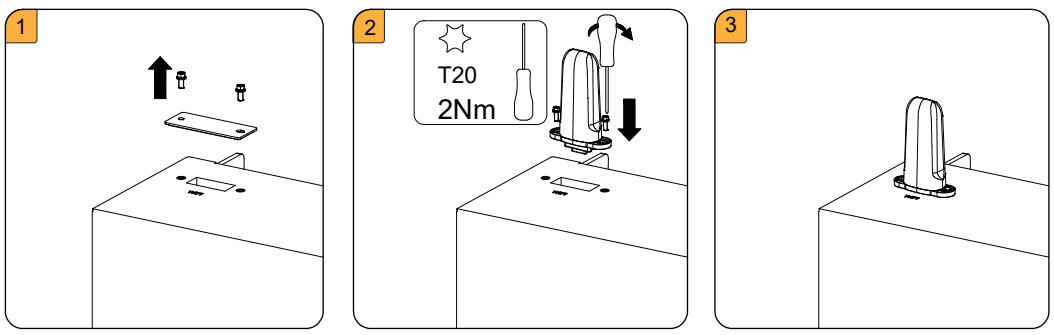

6.2 CAN, RS485 / BMS / LAN / Meter, GRID-CT / DRM / PV-CT/ AUX Connection

Communication Connection Ports as Follows:

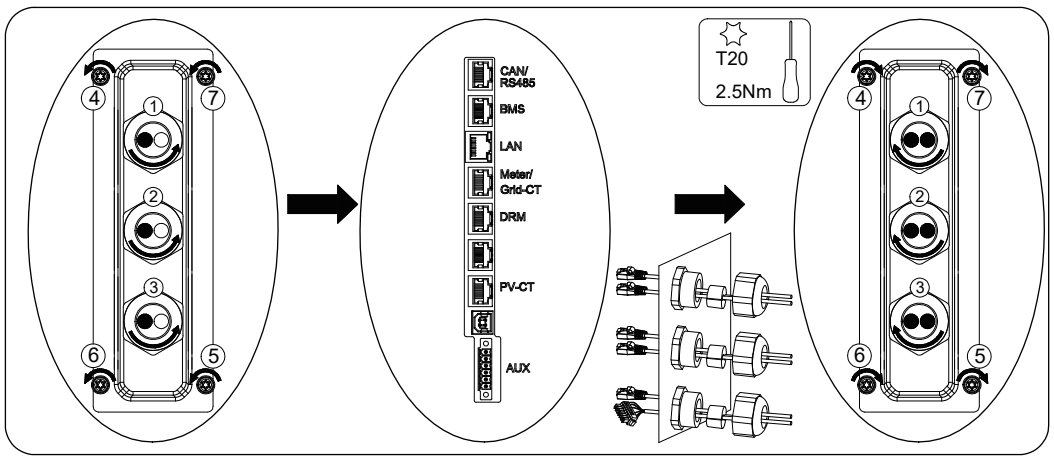

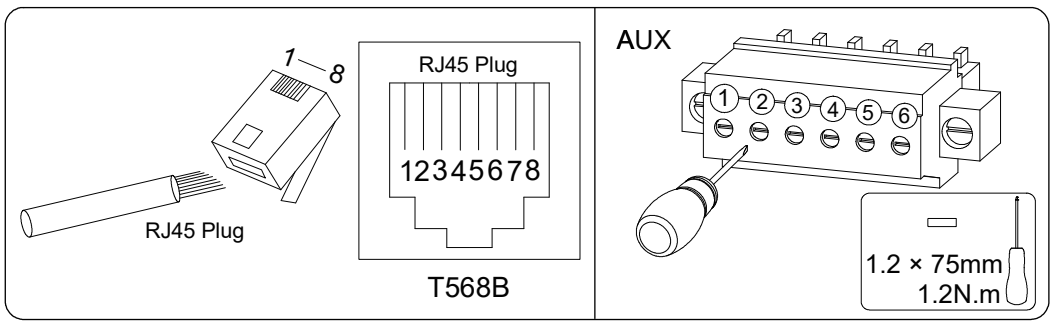

AUX	1	2	3	4	5	6		
	DO1_NC	DO1_COM	DO1_NO	DO2_NC	DO2_COM	DO2_NO		
DRM	1	2	3	4	5	6	7	8
	DRED 1 /5	DRED 2/6	DRED 3/7	DRED 4/8	REF GEN/0	COM LOAD/0	/	/
PV_CT	1	2	3	4	5	6	7	8
	PV_CT-	PV_CT+	RS485_A7	/	/	RS485_ B7		/
GRID_CT METER	1	2	3	4	5	6	7	8
	GRID_CT-	GRID_CT+	RS485_A7	/	/	RS485_ B7	/	/
CAN/ RS485	1	2	3	4	5	6	7	8
	/	/	/	RS485_ B5	RS485_ A5	/	/	/
BMS	1	2	3	4	5	6	7	8
	/	CAN1_L	/	/	/	/	CAN1_H	/

07 Commissioning

WARNING

Before Power-ON,check that the installation and electrical connection are correct and reliable.

Follow the commissioning steps in **COMMISSIONING GUIDE AND REPORT** and it also include steps to download AlphaESS APP and register account, power on the product, configure wifi module, set system parameter and operate the system.

08 Switch OFF the Product Procedure

1) Switch off the AC breaker between the inverter and the load.
2) Switch off the AC breaker between the inverter and the grid.
3) Switch off the battery breaker which is at the left of the inverter.
4) Turn off the battery by pressing the power button at the right side for more than 6s.
5) Switch off the battery bre aker at ri ght side of the battery.

09 Installing the Cable Cover

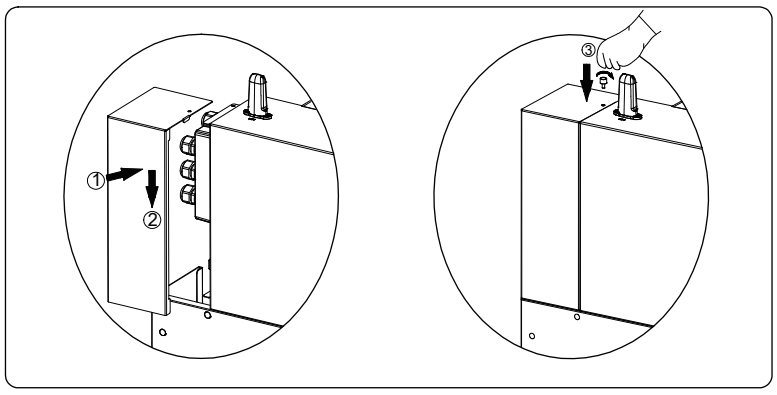

SYSTEM USER MANUAL

SYSTEM INSTALLATION MANUAL

APP MANUAL (INSTALLER)

ALPHACLOUD MANUAL (INSTALLER)

APP MANUAL (END USER)

ALPHACLOUD MANUAL (END USER)

SYSTEM DATASHEET

Alphaess
your smart energy

@AlphaEnergyStorageSystem

@AlphaESS

@alpha_ess

@AlphaESS

www.alphaess.com