EN

AlphaESS QUICK INSTALLATION GUIDE

your smart energy

SMILE-G3-S5-INV / SMILE-G3-S3.6-INV / SMILE-G3-B5-INV / SMILE-G3-S6-INV

412-10000-03

1. Product Overview

(1) Grid Connector
(2) Backup Connector
(3) BAT+ Connector
(4) BAT- Connector
(5) Battery Circuit Breaker
(6) PV Connectors*
(7) PV Switch*
(8) Wi-Fi Port
(9) Communication Ports
(10) LED Display
(11) Grounding Points

*** Only for SMILE-G3-S5/S3.6-INV**

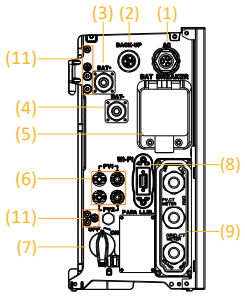

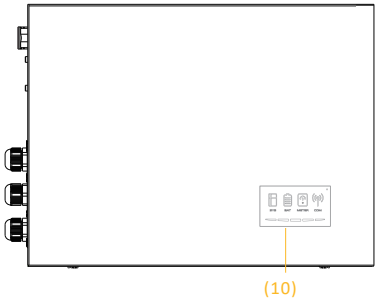

2. Accessories and Installation Tools

2.1 Scope of Delivery

Inverter (×1)	Top Cover (×1)	Right Cover (×1)	Cable Cover (×1)	Left Supporting Foot (×1)	Right Supporting Foot (×1)	PV+ Connectors [a] (×2)	PV- Connectors [a] (×2)
Grid Plug Connector (×1)	Backup Plug Connector (×1)	Backup Plug Connector [b] (×1)	Wi-Fi Module (×1)	6 Pin AUX Terminal Block (×1)	Series Battery Main Positive Power Cable (×1)	Series Battery Main Negative Power Cable (×1)	Grounding Cable between Inverter and 1st Battery (×1)
Y Type Terminals (×5)	M5 Screws (×9)	PV&BAT Connector Disassembling Tool (×1)	Documentation (×4)	a: Not included in SMILE-G3-B5-INV b: Only for SMILE-G3-S6-INV			

2.2 (Optional) Accessories for Wall Mounting

Wall Bracket (×1)	Support Bracket for Cable Cover (×1)	Locating Bracket for Cable Cover (×1)	Locating Screw for Side Cover (×1)	Wall Anchor (×6)	Screw M5*12 (×8)
Screw M3*10 (×2)	Flange Nut M5 (×6)	Left Connector for Wall Bracket (×1)	Right Connector for Wall Bracket (×1)	Small Spirit Level (×1)	

2.3 Installation Tools

T20x150mm T20 Screwdriver	Spirit Level	Blade width: 1.2&2.5mm Flat-head Screwdriver	SW 8 Socket Wrench	Wire Stripper	Network Plug Clamp
Terminal Crimpler	Crimping Pliers	Measuring Tape	Hammer Drill, bit φ10	Multimeter	Current Clamp

3. Installing the Inverter

3.1 Installing the Inverter Standing on the Battery

Before installing the inverter, please ensure that the battery has been installed properly.

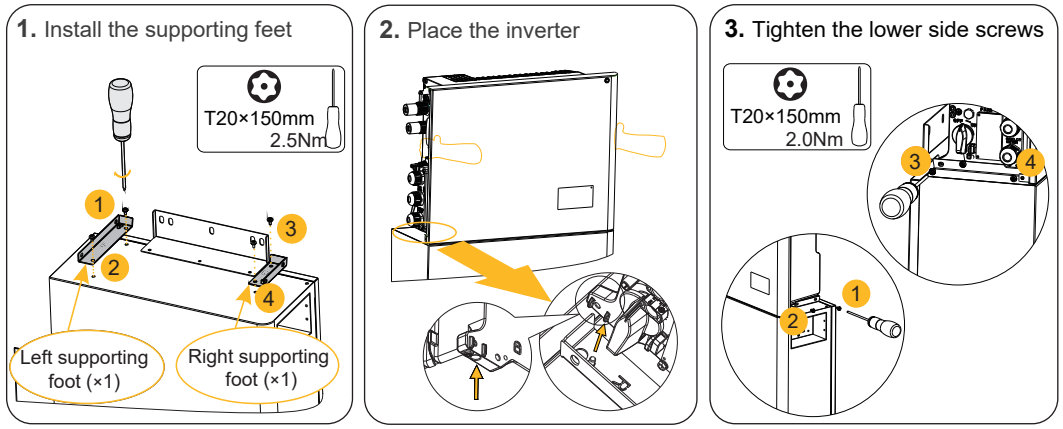

3.1 (Optional) Installing the Inverter with Wall Bracket

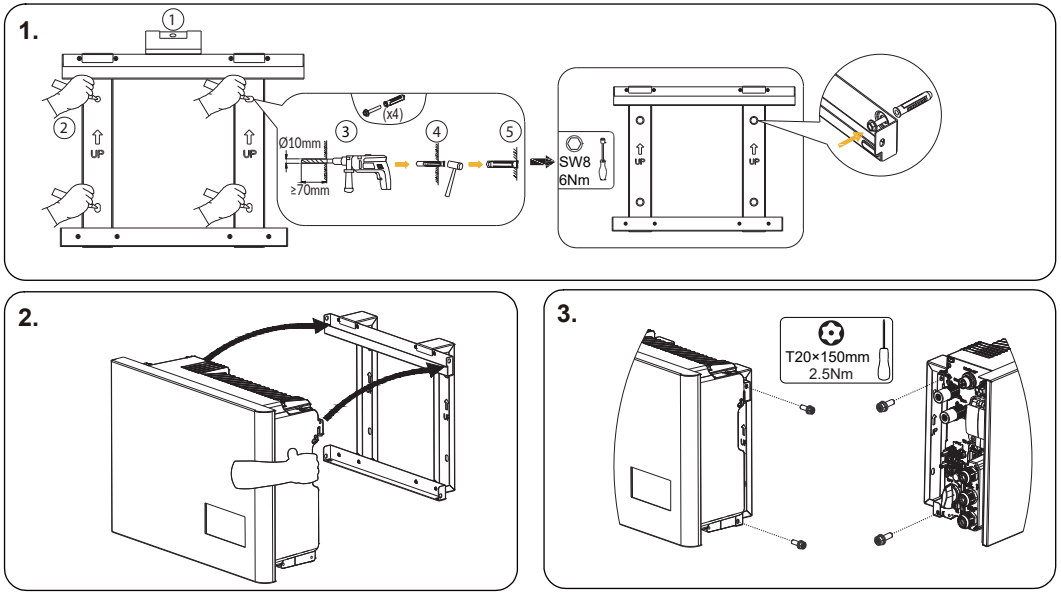

4. Electrical Connection

WARNING

Before doing electrical connection, please ensure the PV switch & AC and BAT circuit breakers are switched off and cannot be reactivated.

DANGER

You must protect each inverter with an individual AC circuit breaker for grid side and backup side in order to ensure that the inverter can be disconnected safely.

4.1 Grounding Connection

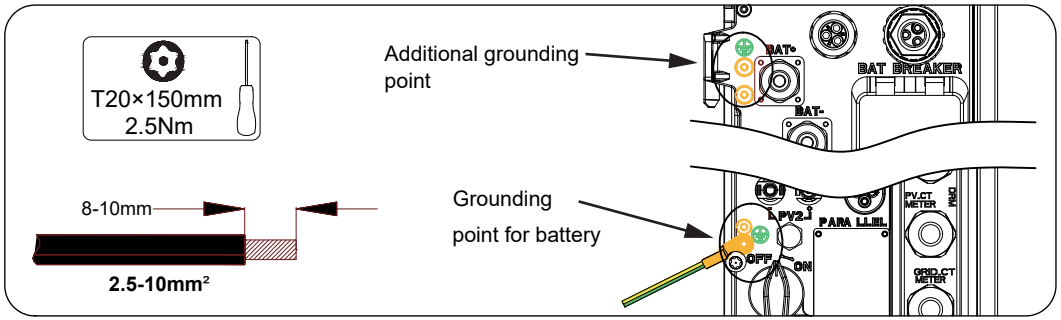

4.2 Battery Power Connection

DANGER

Danger to life due to burns caused by electric arcs through short-circuit currents.
Short-circuit currents in the battery can cause heat build-up and electric arcs. Heat build-up and electric arcs may result in lethal injuries due to burns.

- Disconnect the battery from all voltages sources prior to performing any work on the battery.
- Disconnect the inverter from all voltages sources prior to performing any work on the inverter.
- DO NOT short-circuit the battery terminals. First, complete the negative terminal connection between battery and inverter, and then complete the positive terminal connection between battery and inverter.
- Observe the battery safety information provided in the Installation&Operation&Maintenance Manual.

Wiring steps of BAT power connector for parallel batteries and inverter.

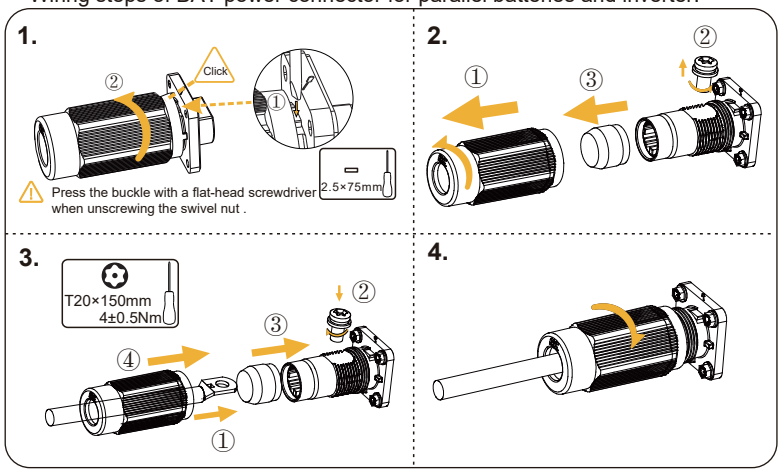

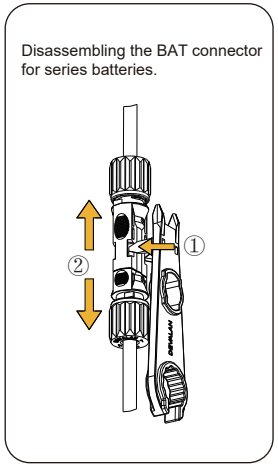

4.3 AC Connection

WARNING

For SMILE-G3-S5/B5-INV, the maximum allowable grid circuit breaker specification is 50A. For SMILE -G3-S6-INV, the maximum allowable grid circuit breaker specification is 63A. At the same time, the copper conductor cross section for grid connection must be 10mm².
If the rated current of the AC circuit breaker selected is less than the maximum current of the inverter, please set its allowable maximum current through the AlphaESS App or AlphaCloud. Otherwise, it will increase the danger of the circuit breaker tripping under normal operating conditions.

AC connection recommendation for S3.6-INV

Description	Max. current	AC Circuit breaker type	Recommended cable section
Grid side	32A	40A	6~10mm²
Backup side	23.5A*	32A**	4~6mm²

AC connection recommendation for S6-INV

Description	Max. current	AC Circuit breaker type	Recommended cable section
Grid side	50A	63A	10mm²
Backup side	50A	63A	10mm²

AC connection recommendation for SMILE-G3-S5/B5-INV

Description	Max. current	AC Circuit breaker type	Recommended cable section
Grid side	43.5A	50A	10mm²
Backup side	35A	50A**	6mm²

*Based on the voltage of 230V.
**You can choose a smaller-sized miniature circuit breaker (MCB) based on the actual backup load power.

4.3.1 Grid Connection

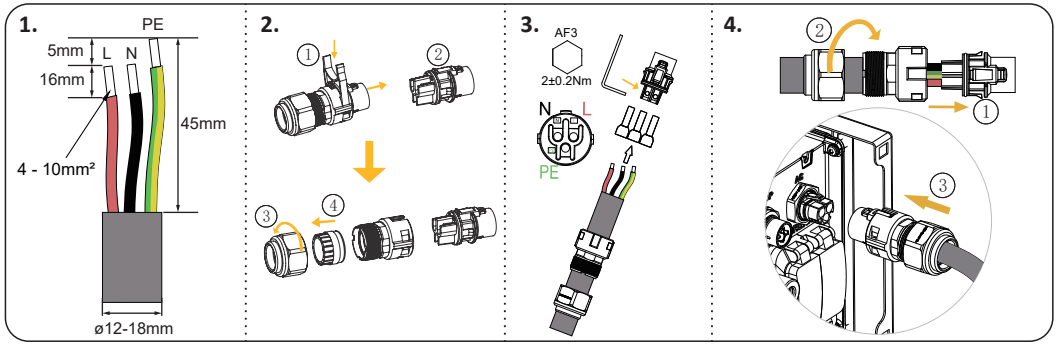

The wiring steps are also suitable for backup connection of SMILE-G3-S6-INV.
The Backup plug connector of the SMILE-G3-S6-INV is blue.
The Grid plug connector of the SMILE-G3-S6-INV is black.

4.3.2 Backup Connection

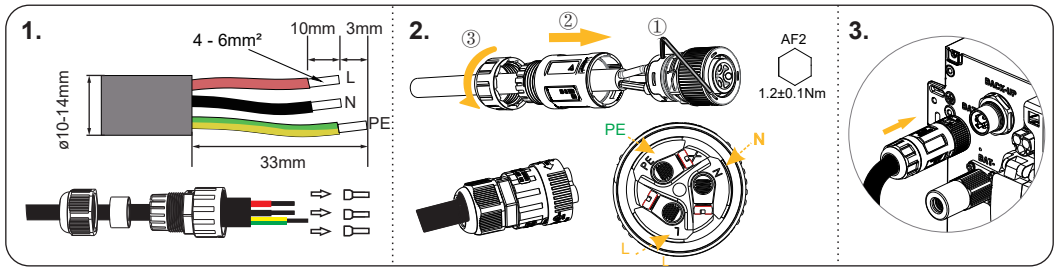

The wiring steps are only suitable for backup connection of SMILE-G3-S5/S3.6/B5-INV.

4.3.3 Grid/Backup Disconnection

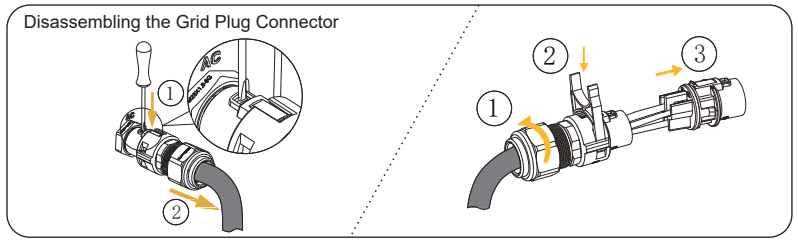

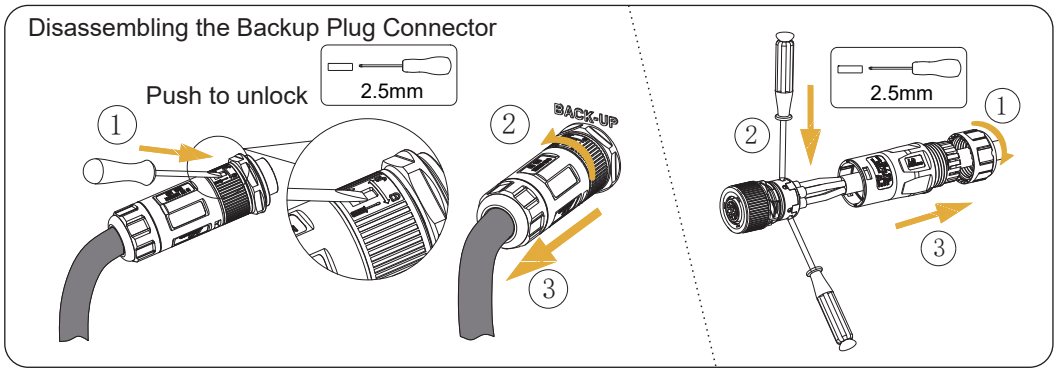

4.4 PV Connection

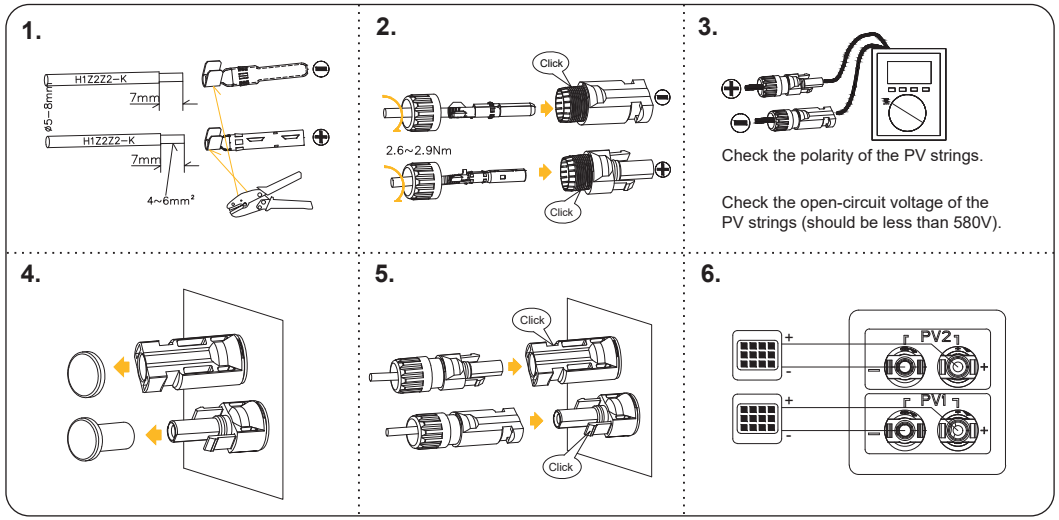

5. Communication Connection

5.1 Wi-Fi Connection

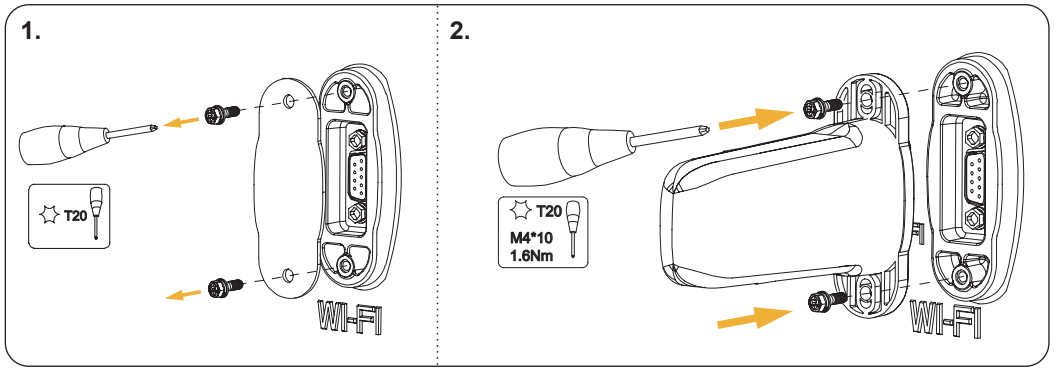

5.2 Communication Connection

AUX / LAN / DRM&RRCR / PV_CT / GRID_CT&Meter / RS485 / BMS Connection Ports

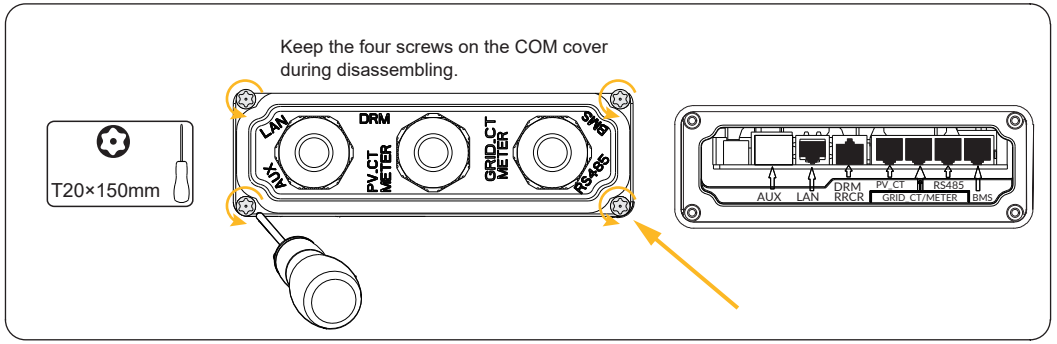

Item \ No.	1	2	3	4	5	6	7	8
BMS	NC	RS485_A4	NC	CAN1_H	CAN1_L	NC	RS485_B4	NC
RS485	12V	NC	GND	RS485_B5	RS485_A5	NC	NC	NC
GRID_CT/METER	GRID_CT-	GRID_CT+	RS485_A7	NC	NC	RS485_B7	NC	NC
PV_CT	PV_CT-	PV_CT+	RS485_A7	NC	NC	RS485_B7	NC	NC
RRCR	K1	K2	K3	K4	3.3V			
DRM	DRED1/5	DRED2/6	DRED3/7	DRED4/8	REFGEN/0	COMLOAD/0		
AUX	DO1_NO	DO1_COM	DO1_NC	DI_NEGATIVE	DI_POSITIVE	GND		

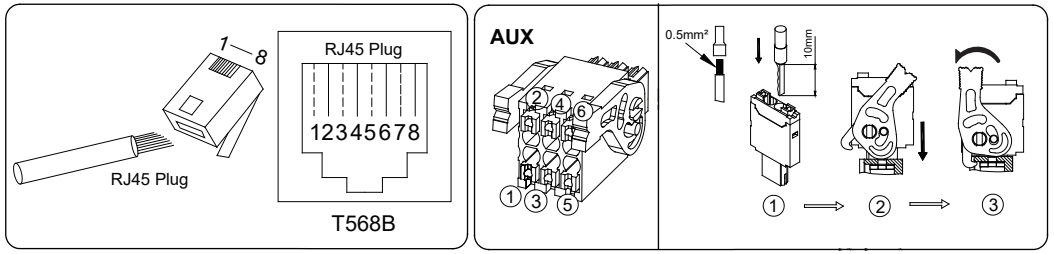

5.3 Wiring the Communication Cables between the Inverter and Battery

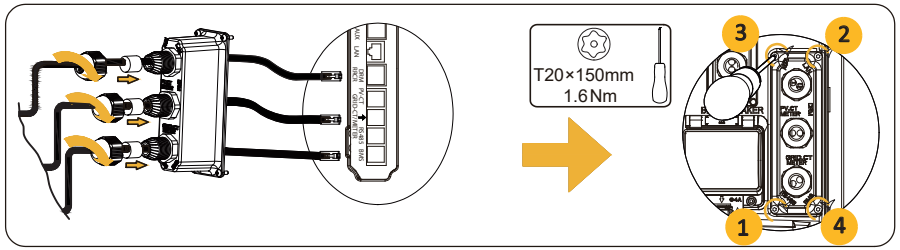

5.4 CT Wiring (Optional)

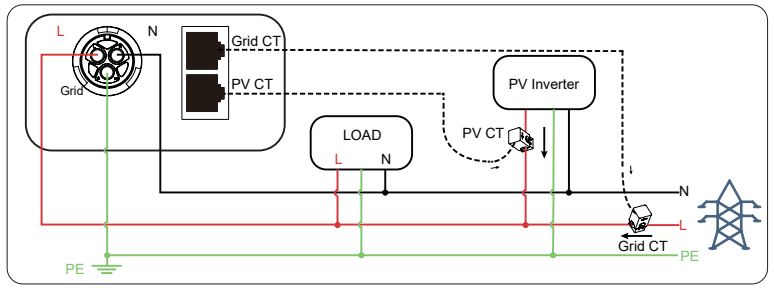

6. Commissioning

WARNING

Never power on the energy storage system without the correct and reliable installation and electrical connection.

Follow the steps in the COMMISSIONING GUIDE AND REPORT to download the AlphaESS App, register your account, power on the system, configure Wi-Fi module, set system parameters and operate the system.
After completing the commissioning, please submit the commissioning report.

7. Power ON / OFF the Energy Storage System Procedure

Procedure for Powering ON the System

1) Switch on the battery circuit breaker of the inverter, directly below the AC connector.
2) Switch on the battery circuit breakers of all batteries.
3) For series batteries, please skip this step.
   For parallel batteries, shortly press the battery power buttons. If more than one parallel battery is installed, please shortly press all power buttons within 30 seconds.
4) Switch on the AC circuit breaker between the grid port of the inverter and the grid.
5) Switch on the AC circuit breaker between the backup port of the inverter and the loads.
6) Switch on the PV switch (if there is any) between the PV strings and the inverter.
7) Switch on the PV switch (if there is any) at the lower left of the inverter.
8) Switch on the AC circuit breaker (if there is any) between the PV-inverter and the grid.

Procedure for Powering Off the System

1) Switch off the AC circuit breaker between the inverter and the loads.
2) Switch off the PV switch (if there is any) between the PV strings and the inverter.
3) Switch off the PV switch (if there is any) at the lower left of the inverter.
4) For series batteries, please skip this step.
   For parallel batteries, press and hold the power button of each parallel battery for 6 seconds.
5) Switch off the battery circuit breakers of the batteries.
6) Switch off the battery circuit breaker of the inverter, directly below the AC connector.
7) Switch off the AC circuit breaker (if there is any) between the PV-inverter and the grid.
8) Switch off the AC circuit breaker between the inverter and the grid.

8. Mounting the Covers

Make sure all the wiring has been done and the energy storage system is working normally, then mount the covers of the inverter.

8.1 Mounting the Top Cover

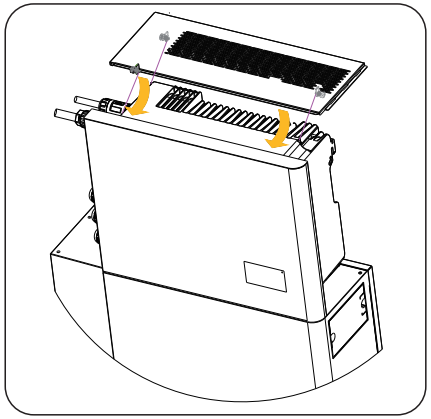

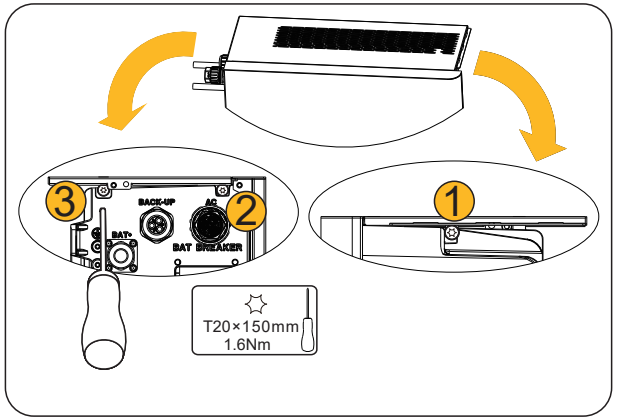

8.2 Mounting the Right Side Cover (If you don't have a wall bracket, please skip step 1.)

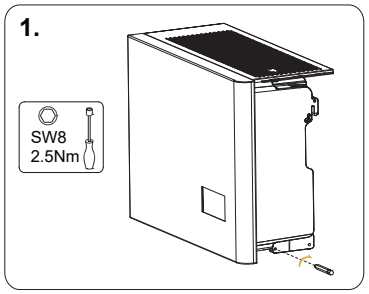

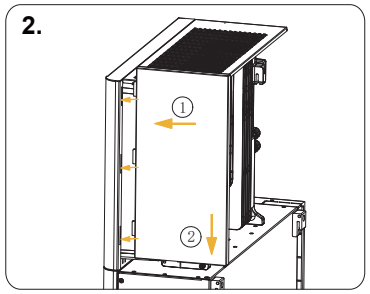

8.3 Mounting the Cable Cover (If you don't have a wall bracket, please skip steps 1 to 3.)

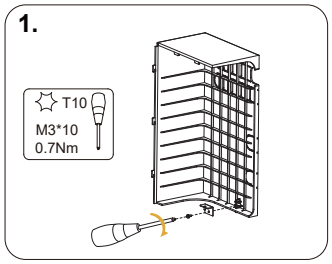

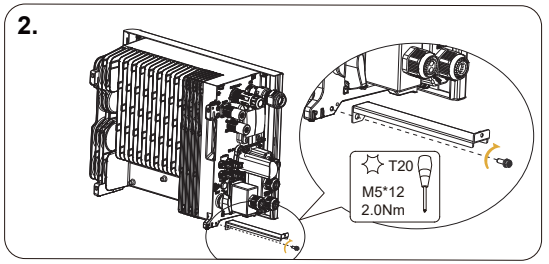

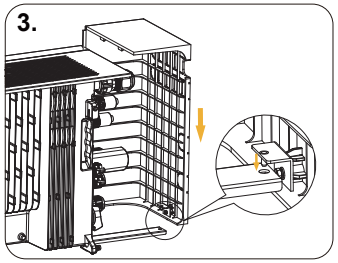

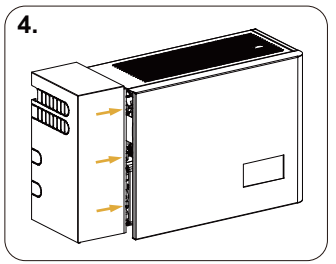

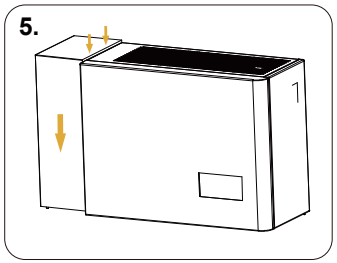

8.4 Disassembling the Cable Cover

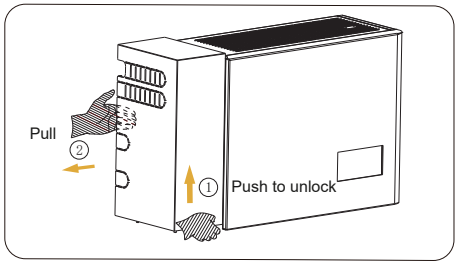

For more information, please download the user manual and other technical documents.

System User Manual | System Installation Manual | App Manual (Installer) | AlphaCloud Manual (Installer) | App Manual (End User) | AlphaCloud Manual (End User) | System Datasheet