EN 64100161 V01

QUICK INSTALLATION GUIDE

SMILE5-INV

01 Product Overview

(1). Wi-Fi Port
(2). Battery Breaker
(3). Battery Power Connectors
(4). PV Switch (optional)
(5). PV Connectors
(6). Backup Connector
(7). Grid Connector
(8). Communication Ports
(9). Grounding Bar
(10). LC Dislpay

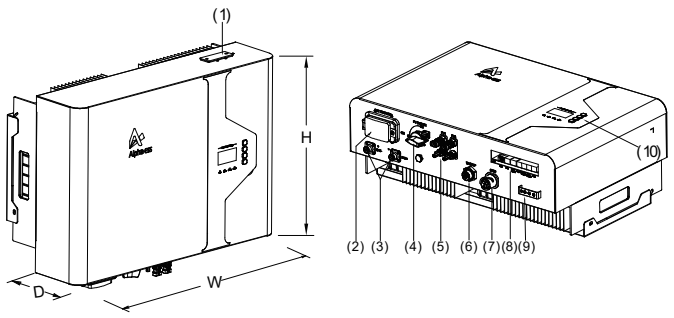

Dimension(W×H×D):610×420×141mm

02 Packing List

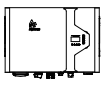 (X1)	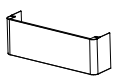 (X1)	 (X2)	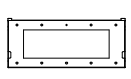 (X1)	 (X1)	 (X1)
 (X2)	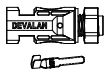 (X2)	 (X3)	 (X1)	 (X1)	 (X2)
 (X3)	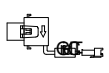 (X1)	 (X1)	 (X6) (X1)	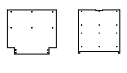 (X1) (X1)	(X1)

03 Installation Tools

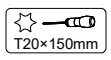 T20 Screwdriver	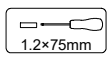 Flat-Head Screwdriver	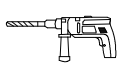 Hammer drill	Bubble or digital level
 Wire Stripper	 Network Wire Clamp	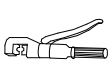 Crimping Plier	 Tape Measure

04 Mount the Inverter

SMILE5-INV with SMILE-BAT SERIES

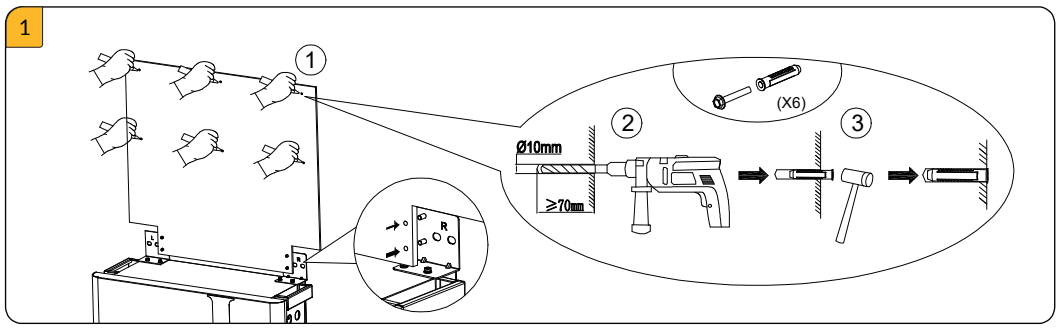

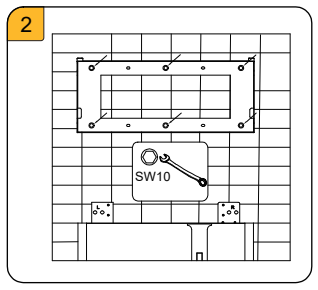

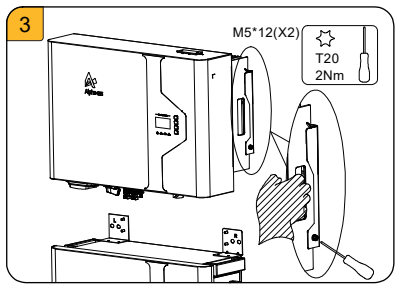

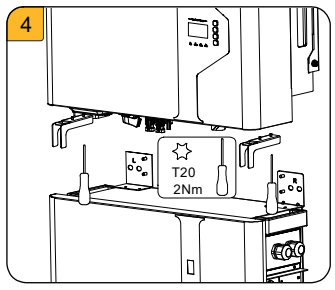

SMILE5-INV with M4856-P

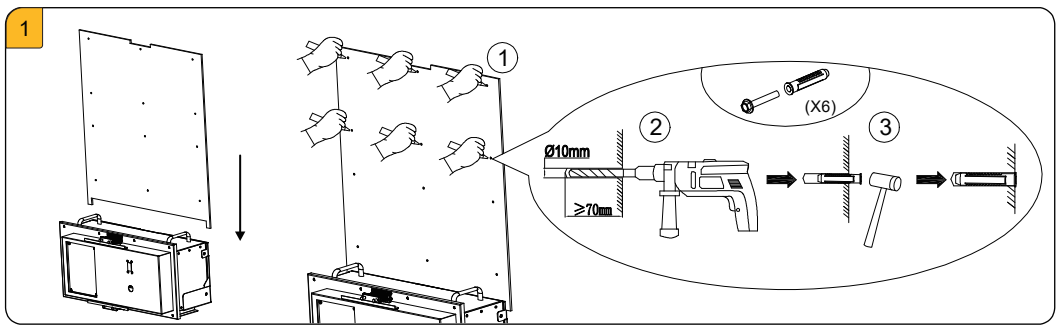

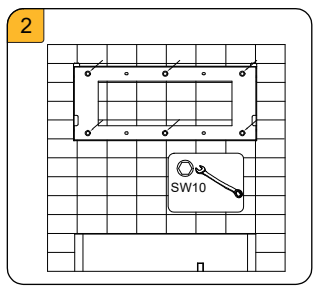

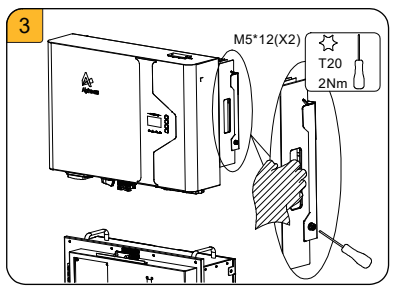

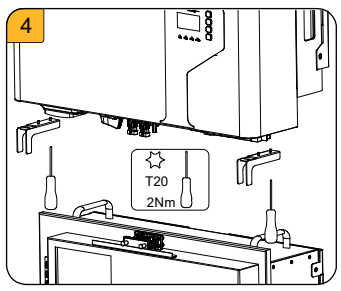

05 Electrical Connections

RISK OF ELECTRIC SHOCK

Before doing electrical connection,please ensure the PV switch & all AC and BAT circuit breakers are switched OFF and cannot be reactivated.

DANGER

You must protect each inverter with an individual grid/backup circuit breaker in order to ensure that the inverter can be disconnected safely.

Description	Breaker Specification
Grid Side	40A
Backup Side	32A

NOTE:
Please see System Wiring Diagram for detailed system wiring.

5.1 Mount the PE Cable

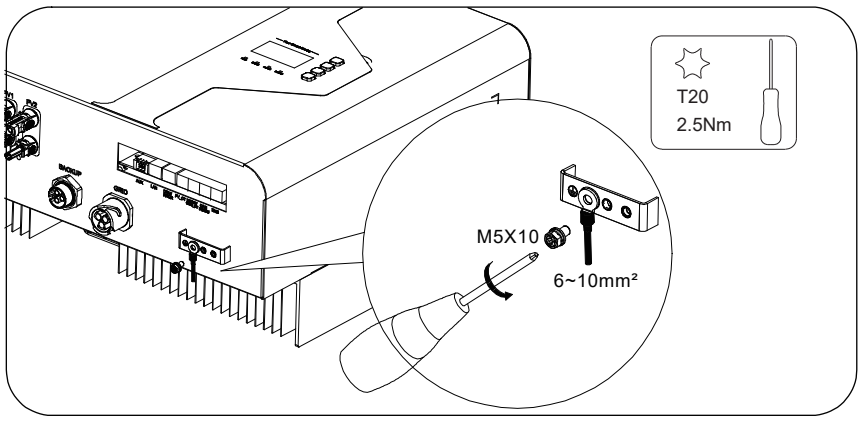

5.2 Connect to the Backup / Grid Power Cable

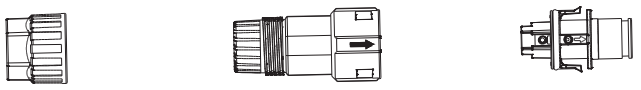

Grid/Backup Connector Structure

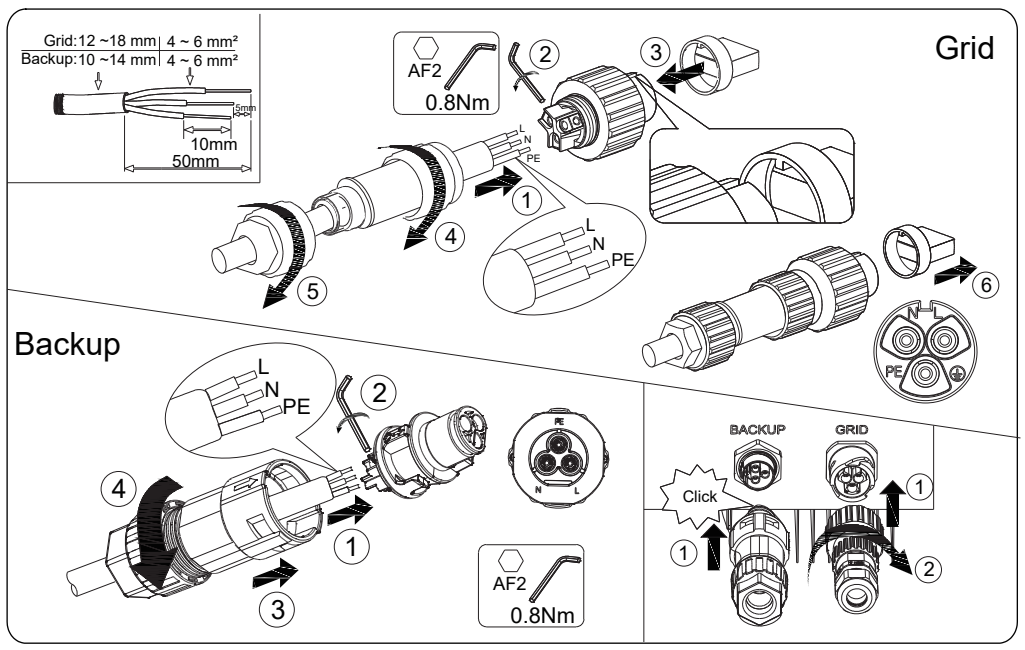

NOTICE:
For the installation sites in Australia and New Zealand, the neutral cable of grid side should be connected in parallel to the backup side, or otherwise the backup output will fail to operate.

5.3 Connecting the Batteries

SMILE5-INV with SMILE-BAT SERIES

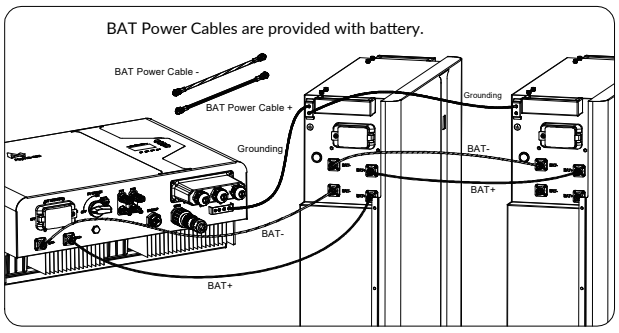

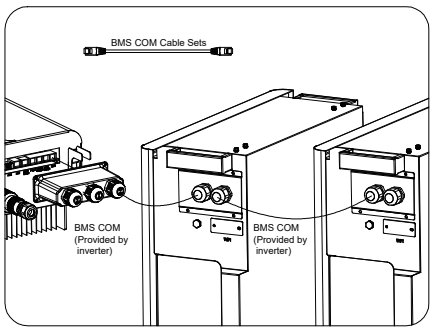

SMILE5-INV with M4856-P

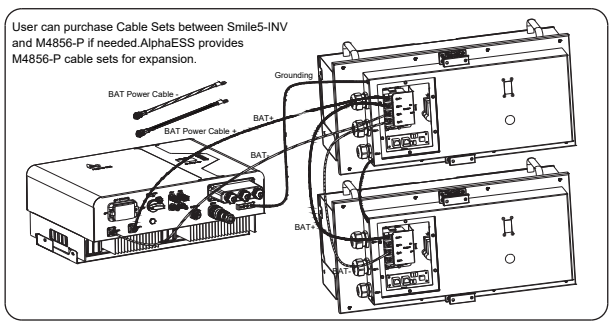

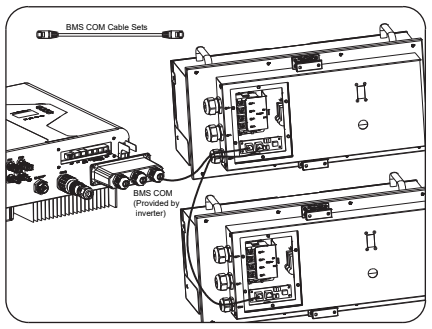

5.4 Connecting the PV Power Cable

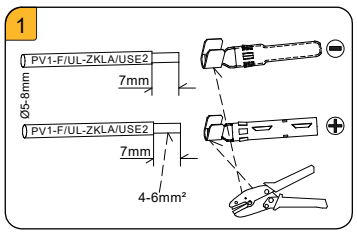

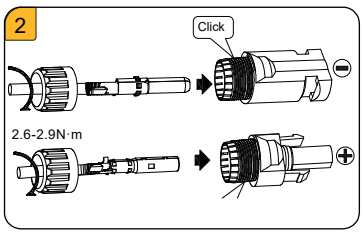

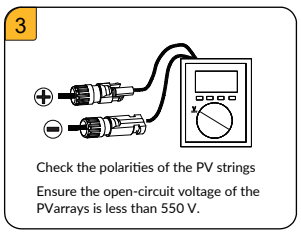

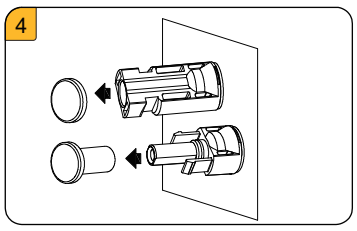

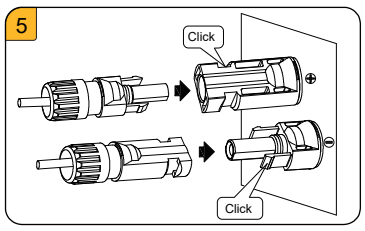

6.2 AUX / LAN /PV-CT /DRM, RRCR /GRID-CT and Meter /RS485 /BMS Communication Connection

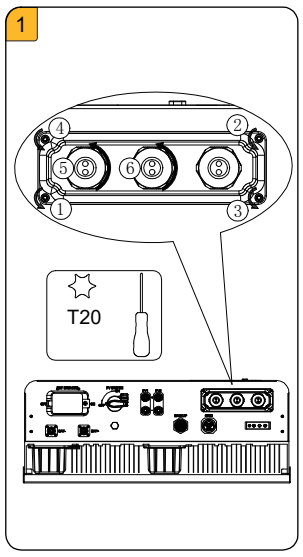

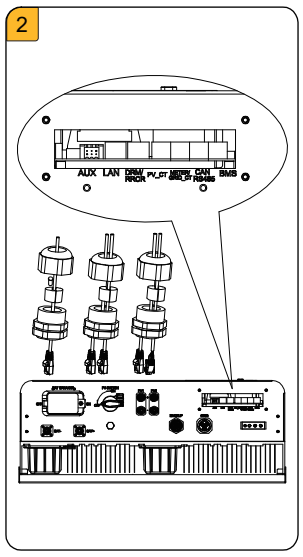

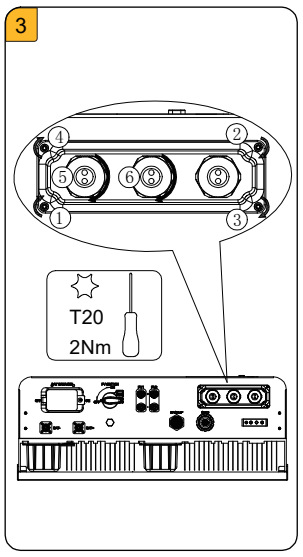

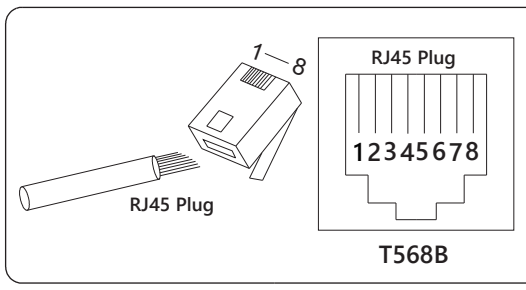

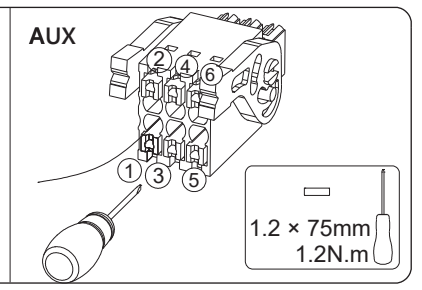

AUX	1	2	3	4	5	6		
	DO1_NO	DO1_COM	DO1_NC	DO2_NO	DO2_COM	DO2_NC		
DRM RRCR	1	2	3	4	5	6	7	8
	DRED 1/5	DRED 2/6	DRED 3/7	DRED 4/8	REF GEN/0	COM LOAD/0	/	/
PV_CT	1	2	3	4	5	6	7	8
	/	/	RS485_A7	/	/	RS485_B7		/
GRID_CT METER	1	2	3	4	5	6	7	8
	/	/	RS485_A7	/	/	RS485_B7	/	/
RS485	1	2	3	4	5	6	7	8
	/	/	/	RS485_B5	RS485_A5	/	/	/
BMS		2	3	4	5	6	7	8
	/	RS485_A4	/	CAN1_H	CAN1_L	/	RS485_B4	/

06 Communication Connection

6.1 Wi-Fi Connection

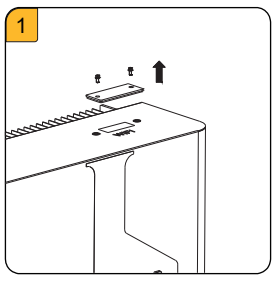

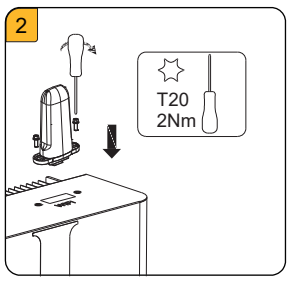

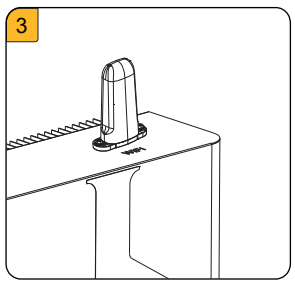

07 Commissioning

WARNING

Never power on without the correct and reliable installation and electrical connection.

Follow the commissioning steps in **COMMISSIONING GUIDE AND REPORT** and it also include steps to download AlphaESS APP and register account, power on the product, configure wifi module, set system parameter and operate the system. After completing the commissioning, please submit the commissioning report.

08 Switch On the Product Procedure

1) Switch on the battery breaker of the batteries.
2) Switch on the battery breaker which is at the bottom of the inverter.
3) Press the battery button, if there are multiple batteries, press the button of each battery within 5s prior to the next one.
4) Switch on the AC breaker between the grid port of the Smille5-inv and the grid.
5) Switch on the AC breaker between the backup port of the Smile5-inv and the loads.
6) Switch on the PV switch at the bottom of the Smile5-inv if there is any.
7) Switch on the PV switch between the external PV-inverter and the grid if there is any.

09 Switch OFF the Product Procedure

1) Switch off the AC breaker between the inverter and the load.
2) Switch off the AC breaker between the inverter and the grid.
3) Switch off the PV switch at the bottom of the inverter if there is any.
4) Switch off the PV switch between the PV string and the inverter if there is any.
5) Switch off the battery breaker which is at the bottom of the inverter.
6) Long press the power button of the battery for 6s.
7) Switch off the battery breaker.

10 Installing the Cable Cover

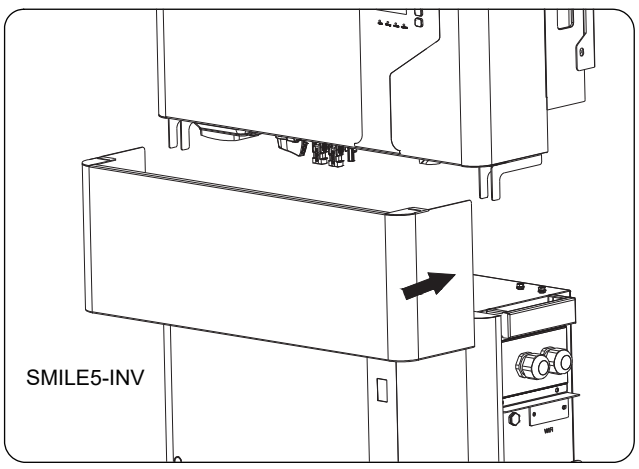

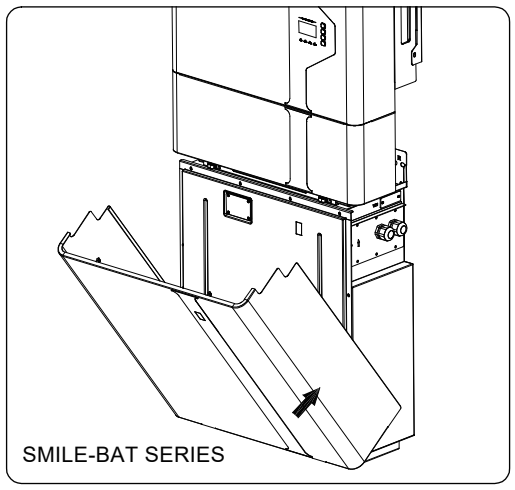

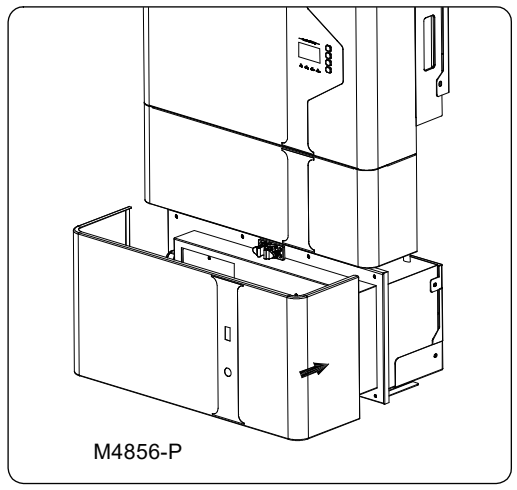

SYSTEM USER MANUAL

SYSTEM INSTALLATION MANUAL

APP MANUAL (INSTALLER)

ALPHA CLOUD MANUAL (INSTALLER)

APP MANUAL (END USER)

ALPHA CLOUD MANUAL (END USER)

SYSTEM DATASHEET

@AlphaEnergyStorageSystem @AlphaESS @alpha_ess @AlphaESS www.alphaess.com
Alphaess your smart energy