QUICK INSTALLATION GUIDE

SMILE-BAT-8.2PH (INDOOR)

V01



Legal Provisions

The information contained in these documents is the property of AlphaESS. No part of this document may be reproduced, stored in a retrieval system, or transmitted, in any form or by any means, be it electronic, mechanical, photographic, magnetic or otherwise, without the prior written permission of AlphaESS. Internal reproduction used solely for the purpose of product evaluation or other proper use is allowed and does not require prior approval.

AlphaESS makes no representations or warranties, express or implied, with respect to this documentation or any of the equipment and/or software it may describe, including (with no limitation) any implied warranties of utility, merchantability, or fitness for any particular purpose. All such representations or warranties are expressly disclaimed. Neither AlphaESS nor its distributors or dealers shall be liable for any indirect, incidental, or consequential damages under any circumstances.
The exclusion of implied warranties may not apply in all cases under some statutes, and thus the above exclusion may not apply.

Specifications are subject to change without notice. Every attempt has been made to make this document complete, accurate and up-to-date. Readers are cautioned, however, that product improvements and field usage experience may cause AlphaESS to make changes to these specifications without advance notice or per contract provisions. AlphaESS shall not be responsible for any damages, including indirect, incidental or consequential damages, caused by reliance on the material presented, including, but not limited to, omissions, typographical errors, arithmetical errors or listing errors in the content material.

1. Information on this Document

1.1. Validity

This document is valid for the SMILE-BAT-8.2PH.

1.2. Target Group

The instructions in this document may only be performed by qualified persons who must have the following skills:

- Knowledge of how batteries work and are operated
- Knowledge of how an inverter works and is operated
- Knowledge of, and adherence to the locally applicable connection requirements, standards and directives
- Knowledge of, and adherence to this document and the associated system documentation, including all safety instructions
- Training in dealing with the hazards associated with the installation and operation of electrical equipment and batteries
- Training in the installation and commissioning of electrical equipment

Failure to do so will make any manufacturer's warranty, guarantee or liability null and void unless you can prove that the damage was not due to non-compliance.

1.3. Content and Structure of this Document

This document contains safety information and instructions on installing, connecting and commissioning. Please finish reading this document before taking any actions on this product.

The latest version of this document and the installation/commission/operation manual can be found in Document Center on AlphaCloud/AlphaAPP.

Illustrations in this document are reduced to the essential information and may deviate from the real product.

2. Safety

2.1. Intended Use

This product is for residential and small business use, and works with a PV system. It is a high voltage Li-ion battery storage system. It could be operated in either off-grid or on-grid mode with compatible inverters.

This product could be connected with the Internet through inverter for maintenance and software updates.

This product must only be used as stationary equipment.

This product is suitable for indoor use.

This product can only work with compatible inverter and you can find the compatible inverter list at AlphaESS official website.

This product is not suitable for supplying life-sustaining medical devices. Please ensure that no personal injury would lead due to the power outage of the system.

Alterations to the AlphaESS product, e.g., changes or modifications are not allowed unless the written permission of AlphaESS is achieved.

Any use of the product other than that described in the Intended Use section does not qualify as the intended use.

The enclosed document is an integral part of this product. Keep the documentation in a convenient, dry place for future reference and observe all instructions contained therein.

The type label should be always attached to the product.

2.2. IMPORTANT SAFETY INSTRUCTIONS

This product has been designed and tested under international safety requirements. However, to prevent personal injury and property damage and ensure long-term operation of this product, please do read this section carefully and observe all safety information at all times.

2.2.1. Battery Pack Leakage

If the battery packs leak electrolyte, contact with the leaking liquid or gas should be avoided. Electrolyte is corrosive and the contact may cause skin irritation and chemical burns. If one is exposed to the leaked substance, do these actions:

Inhalation: Evacuate the contaminated area, and seek for medical help immediately.

Eye contact: Rinse eyes with flowing water for 15 minutes, and seek for medical help immediately.

Skin contact: Wash the affected area thoroughly with soap and water, and seek for medical help immediately.

Ingestion: Induce vomiting, and seek for medical help immediately.

2.2.2. Firefighting Measures

The battery packs may catch fire when it is put into fire. In case of a fire, please make sure that an ABC or carbon dioxide extinguisher is nearby. Water cannot be used to extinguish the fire.

Full protective clothing and self-contained breathing apparatus are required for the firefighters to extinguish the fire.

2.2.3. Battery Packs Handling and Storage Guide

- The battery packs and its components should be protected from damage when transporting and handling.
- Weight of the battery pack may cause injury risk, please take the weight of this product into account during transportation and lifting.
- Do not impact, pull, drag or step on the battery packs.
- Do not insert unrelated objects into any part of the battery packs.

- Do not throw the battery packs into a fire.
- Do not soak the battery packs in water or seawater.
- Do not expose to strong oxidizers.
- Do not short circuit the battery packs.
- The battery packs cannot be stored in high temperature (more than 60℃).
- The battery packs cannot be stored directly under the sun.
- The battery packs cannot be stored in high humidity environment.
- Do not use the battery packs if it is defective, or appears cracked, broken or otherwise damaged, or fails to operate.
- Do not attempt to open, disassemble, repair, tamper with, or modify the battery packs. The battery packs are not user serviceable.
- Do not use cleaning solvents to clean the battery packs.

2.2.4. Warning of Electric Shock

It is danger to life due to electric shock when live components or DC cables are touched.

The DC cables connected to this product may be live. Touching live DC cables results in death or serious injury due to electric shock.

- Disconnect the battery from voltage source and make sure it cannot be reconnected before working on the device.
- Do not touch non-insulated parts or cables.
- Do not disconnect the battery power connectors under load, an electric arc may occur leading to electric shock and burns.
- Wear suitable personal protective equipment for all work on the battery pack.

2.2.5. Notice of Property Damage

If the product doesn't start at all, please contact AlphaESS service as soon as possible. Otherwise, the battery could be permanently damaged.

2.2.6. Surge Protection

Over-voltages (e. g. in the event of a flash of lightning) can be further conducted into the building and to other connected devices in the same network via the network cables or other data cables if there is no surge protection.

Ensure that this product is integrated into the existing surge protection.

2.2.7. Safety Information of the Inverter Manufacturer

Please read and observe all safety information of the inverter manufacturer.

3. Symbols on the System

Symbol	Explanation
	Beware of a danger zone This symbol indicates that the product must be additionally grounded if additional grounding or equipotential bonding is required at the installation site.
	Beware of electrical voltage The product operates at high voltages.
	Grounding conductor This symbol indicates the position for connecting a grounding conductor.
	Risk of chemical burns
	Risk of explosion
	WEEE designation Do not dispose of the product together with the household waste but in accordance with the disposal regulations for electronic waste applicable at the installation site.
	Observe the documentation Observe all documents supplied with the system.
	Risk of electrolyte leakage
	Refer to the instruction for operation
	Use eye protection
	Fire, naked light and smoking prohibited. Keep the battery modules away from open flame or ignition sources.

	No nearing
	Do not short circuit.
	CE marking The product complies with the requirements of the applicable EU directives.
	RCM (Regulatory Compliance Mark), a brief guide to Electrical equipment approvals in Australia
	The relevant device equipment conforms to the requirements specified in UK Directives.
	Place it straight up, without inclination or upside down.
	Handle with care
	Keep it dry

4. EU Declaration of Conformity

Within the scope of the EU directives

- Radio Equipment Directive 2014/53/EU (22.5.2014 L 153/62) (RED)
- Restriction of the use of certain hazardous substances 2011/65/EU (L 174/88, June 8, 2011) and 2015/863/EU (L 137/10, March 31, 2015) (RoHS)

AlphaESS confirms herewith that the products described in this document are in compliance with the fundamental requirements and other relevant provisions of the above mentioned directives. The entire EU Declaration of Conformity can be found at www.alpha-ess.com.

5. UK Declaration of Conformity

According to the regulations of England, Wales and Scotland

• Radio Equipment Regulations 2017

• The Restriction of the Use of Certain Hazardous Substances in Electrical and Electronic Equipment Regulations 2012

AlphaESS confirms herewith that the products described in this document are in compliance with the fundamental requirements and other relevant provisions of the above mentioned regulations. The entire UK Declaration of Conformity can be found at www.alphaess.com.

6. Instructions

6.1. Product Overview

6.1.1. Interface

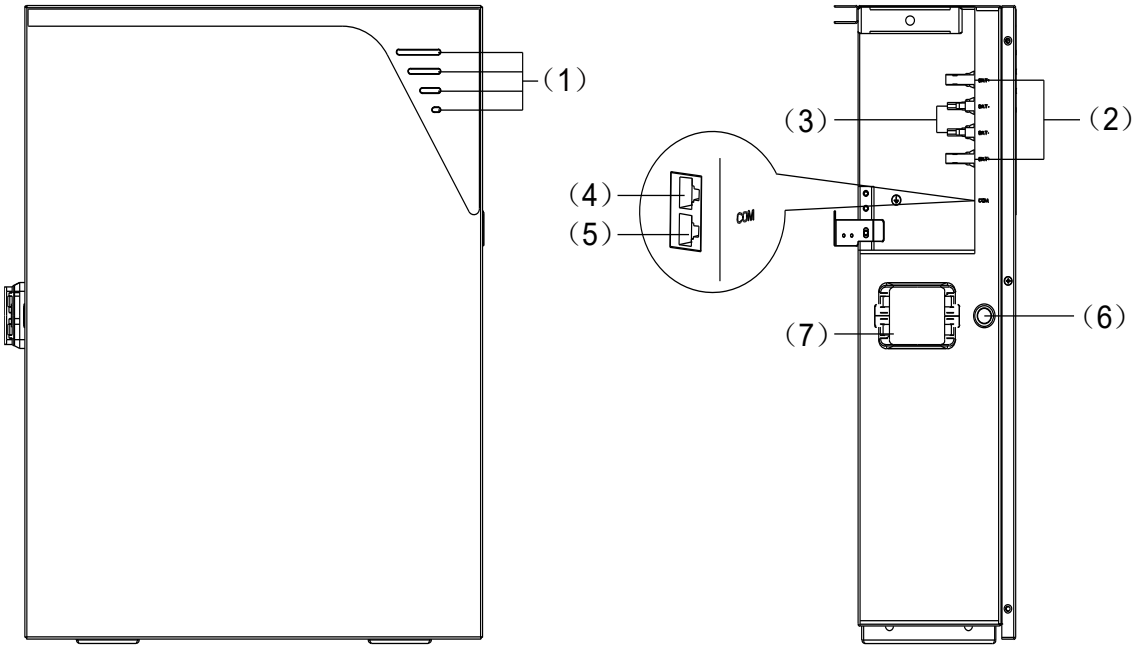

(1) LED Display

(2) BAT+ Power Connectors

(3) BAT- Power Connectors

(4) BMS COM-1

(5) BMS COM-2(with terminal resistance)

(6) Power Button

(7) Battery Circuit Breaker

6.1.2. LED Display

Four LED indicators are provided on the display panel of the battery.
Different colors represent different states: green for SOC, yellow for Protection, red for Error.

Battery SOC Description

LED Indictor	SOC	Description
Standby: **Green LEDs flash once per second**		SOC≤5% The first line of the LED indicator flashes every 10s.
		5%＜SOC≤30% The first line of the LED indicator is always on. When the SOC is less than 30% and the battery is being charged, the first line of the LED indicator will flash every 3s.
		30%＜SOC≤55% The first and second line of the LED indicator are always on. When the battery is being charged and the SOC is between 30% and 55%, the second line of the LED indicator will flash every 3s.
		55%＜SOC≤80% The first, second and third line of the LED indicator are always on. When the battery is being charged and the SOC is between 55% and 80%, the third line of the LED indicator will flash every 3s.
		80%≤SOC≤100% All the LED indicators are always on. When the battery is being charged and the SOC is between 80% and 100%, the fourth line of the LED indicator will flash every 3s.

Battery Protection Status Description

LED Indictor	Error Code	LED Display	Description	Troubleshooting
Yellow LEDs flash once per second.	1		Temperature difference	Wait for automatical recovery. If the problem is not be solved yet, please call the service center.
	3		Hardware error	Stop discharging and charging until this state is eliminated and wait for the temperature to drop.
	4		Low-temperature discharge	Stop discharging until this code is eliminated and wait for the temperature to rise
	5		Over-current charge	Wait for automatical recovery. If the problem is not be solved yet, please call the service center.
	6		Over-current discharge	
	8		Cell overvoltage	
	9		Cell under voltage	Stop discharging and call the service immediately.
	11		Low-temperature charge	Stop discharging until this state is eliminated and wait for the temperature to rise.

⚠ **NOTE:**

In the case of work mode, if the protection code 9 appears, please press the power button 5 times within 10 seconds, the BMS will be forced to turn on the MOSFET of discharge so that the inverter can detect the battery open voltage and charge the battery.

Battery Error Status Description

LED Indictor	Error Code	LED Display	Description	Troubleshooting
Red LEDs flash once per second.	Error 01		Hardware error	Wait for automatical recovery. If the problem is not be solved yet, please call the service center.
	Error 02		Hardware error	
	Error 03		Hardware error	
	Error 05		Hardware error	
	Error 06		Circuit breaker open	Switch on circuit breaker after powering off the battery.
	Error 08		LMU disconnect (slave)	Reconnect the BMS communication cable.
	Error 09		SN missing	Call for service.
	Error 10		LMU Disconnect (master)	Reconnect the BMS communication cable.
	Error 11		Software ver-sion inconsistent	Call for service.
	Error 12		Multi master	Restart all batteries.
	Error 13		MOS over temperature	Power off the battery and power on the battery after 30 minutes.
	Error 14		Insulation fault	Restart battery and in case the problem is not resolved, call for service.
	Error 15		Total voltage fault	Restart battery and in case the problem is not resolved, call for service.

6.1.3. Switch On/Off

Switch on:

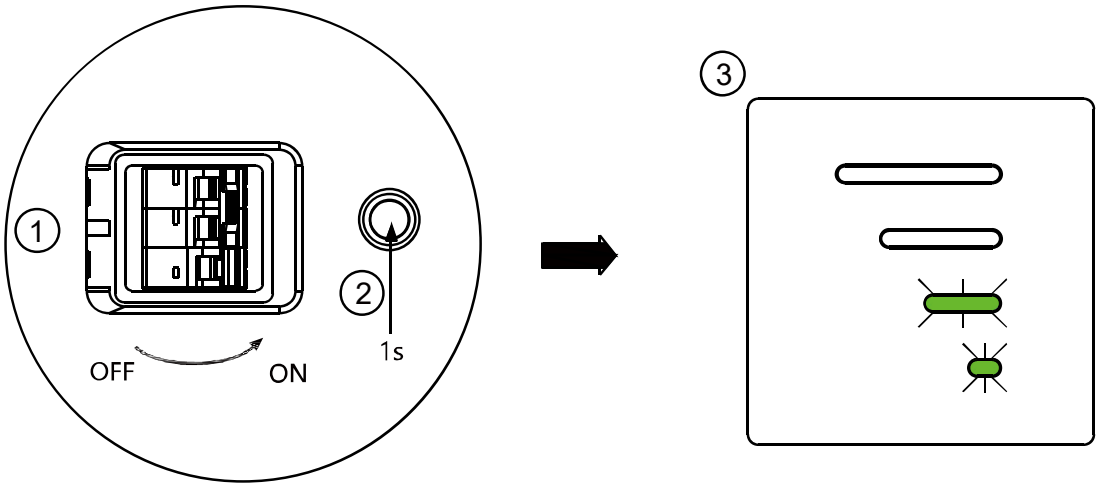

Switch off:

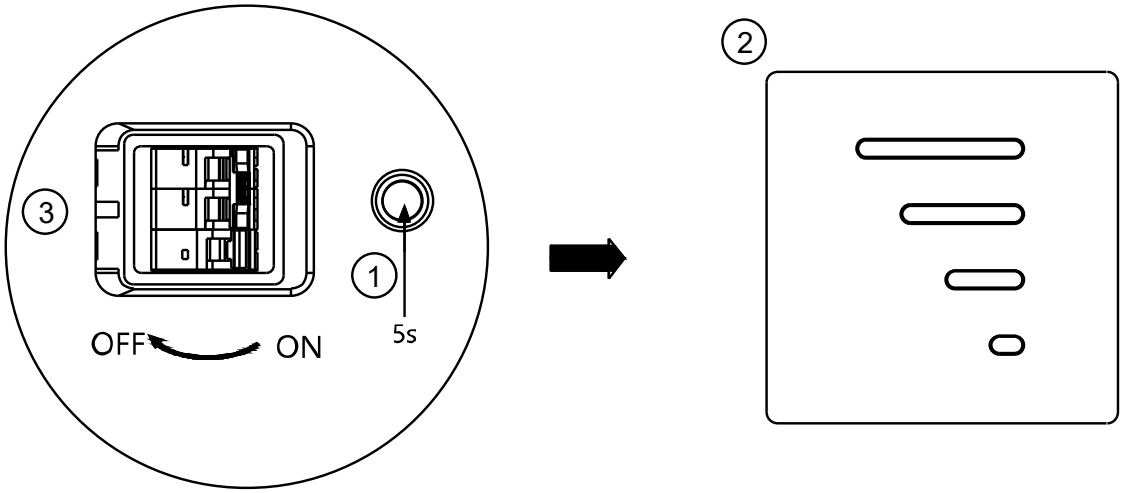

6.2. Dimensions

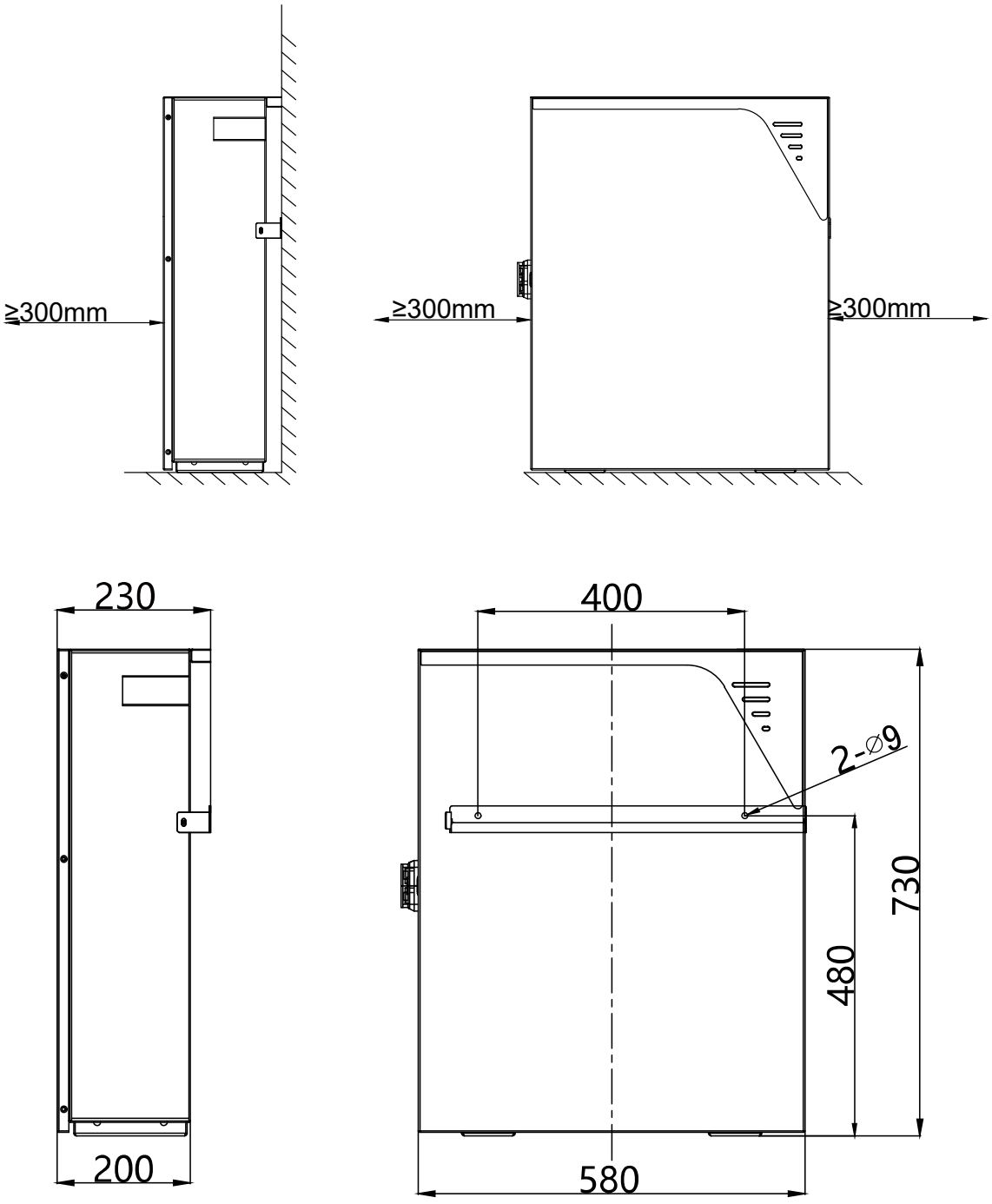

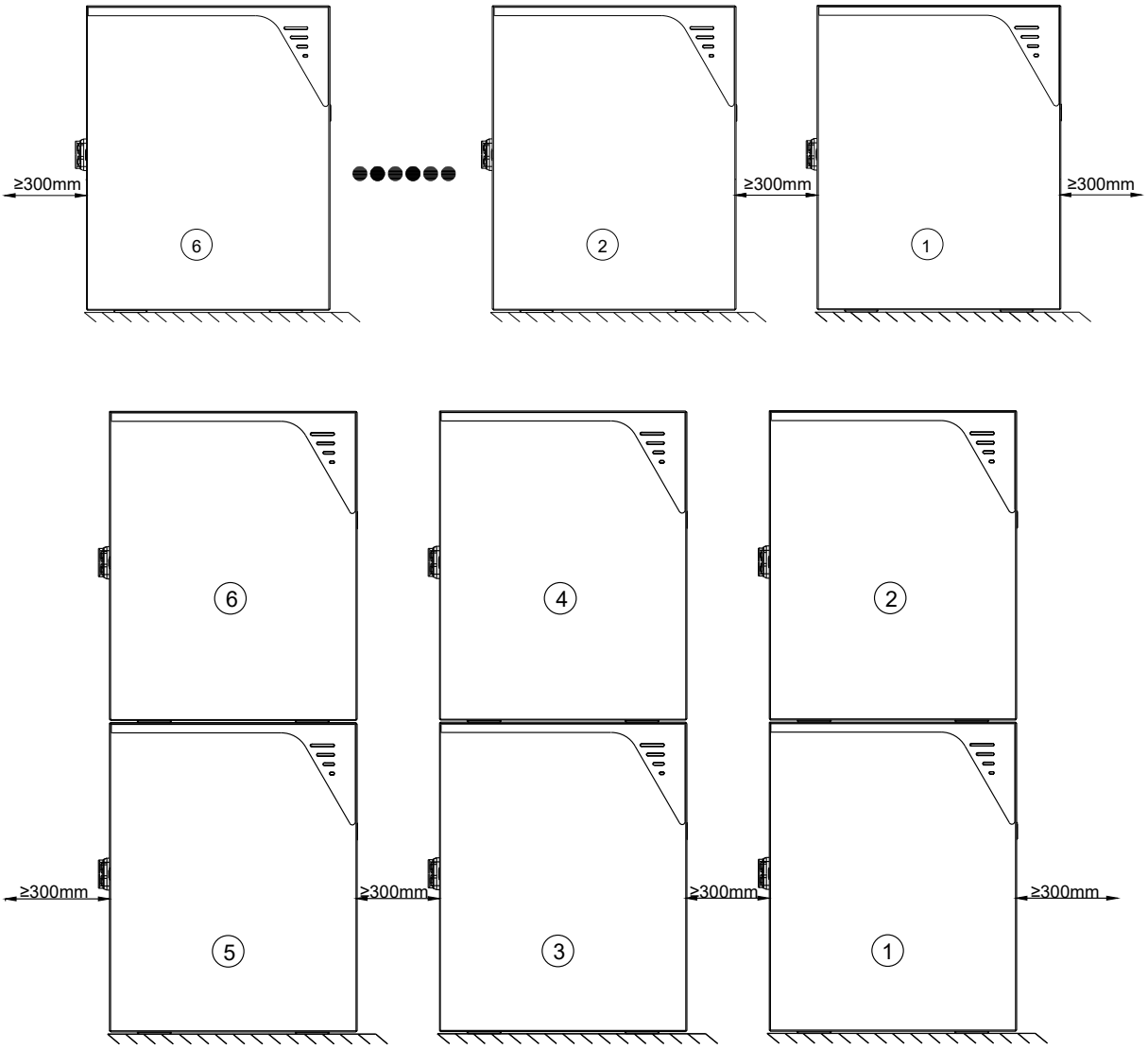

The side clearance “ ⩾300mm” is a recommendation. Keep the clearance as short as you can if there is no influence to the breaker operation and maintenance

6.3. Scope of Delivery

1x

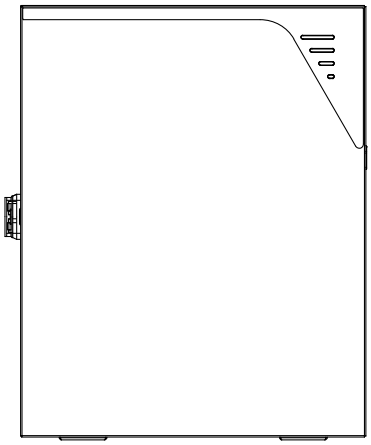

1x



1x

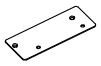

8x



(M5*10)

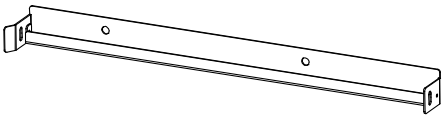

2x



(M5*12)

4x

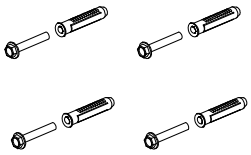

1x

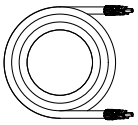

1x

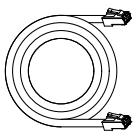

1x

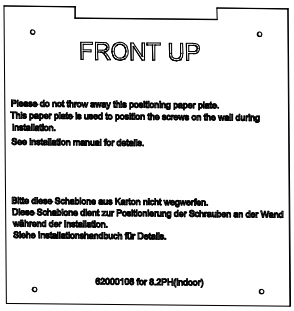

2x



2x

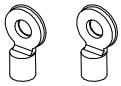

1x

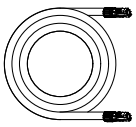

1x

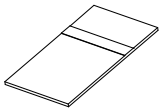

6.4. Mounting Location

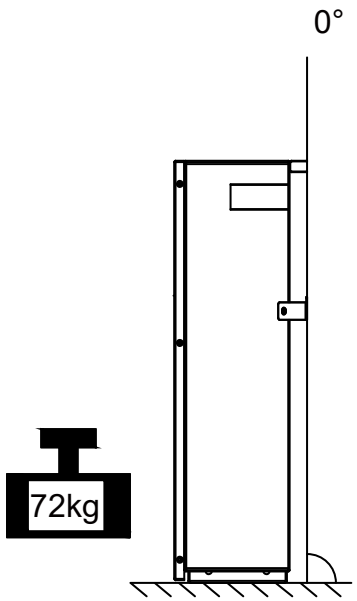

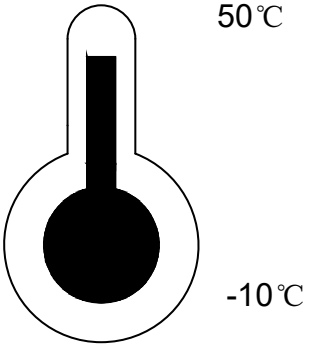

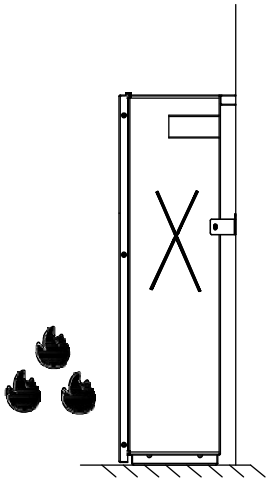

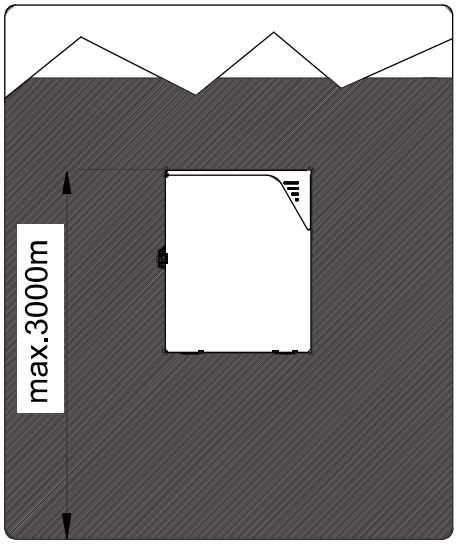

6.5. Installation

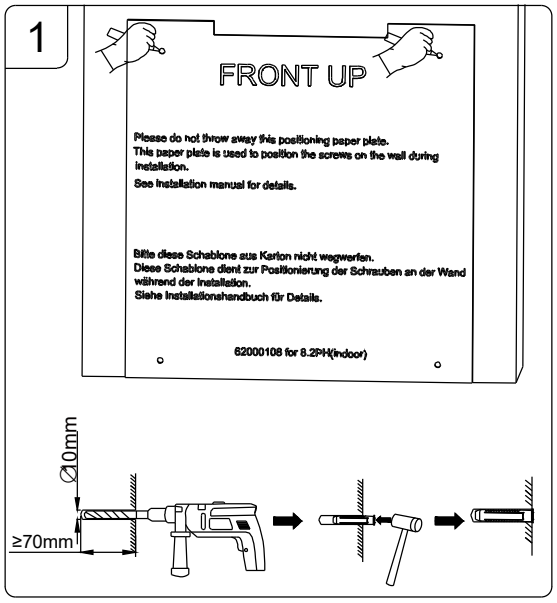

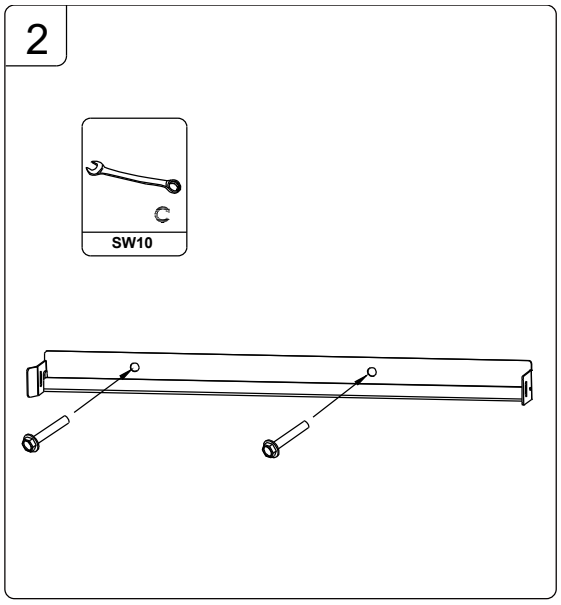

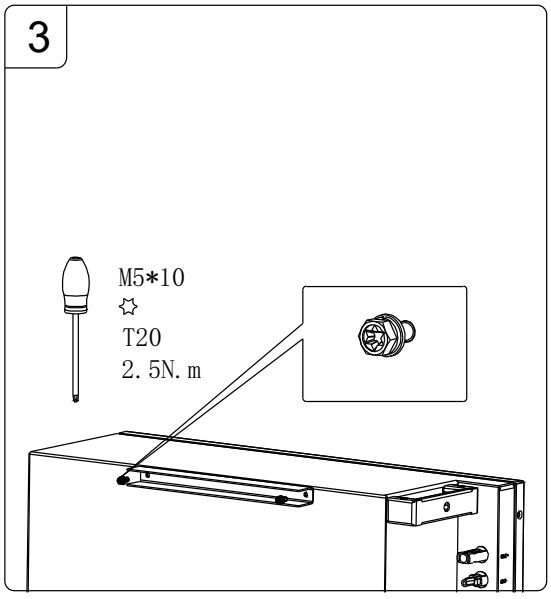

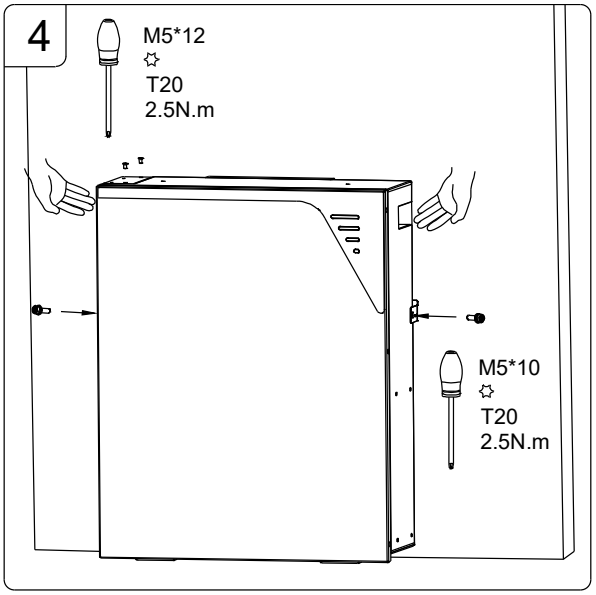

Expansion of Battery

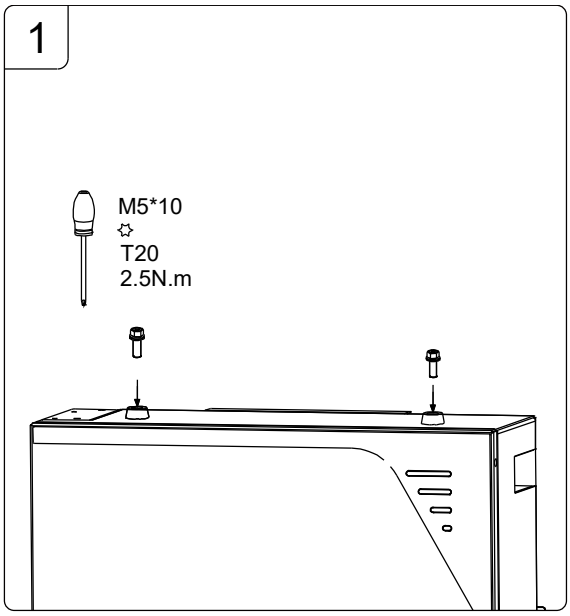

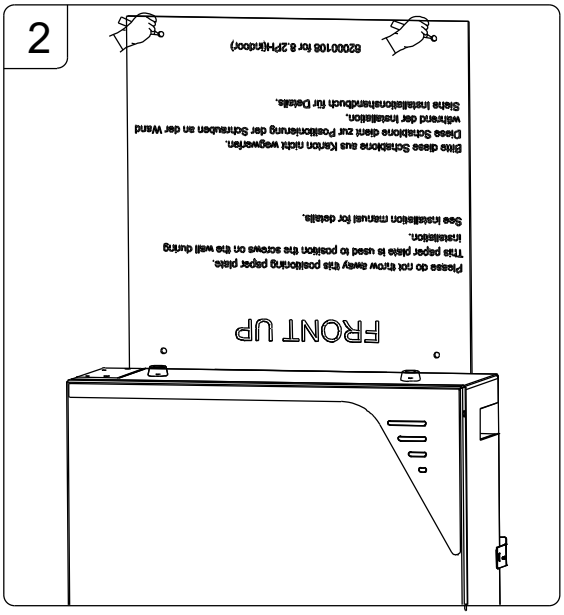

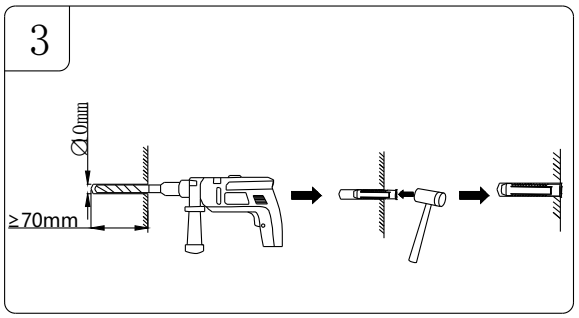

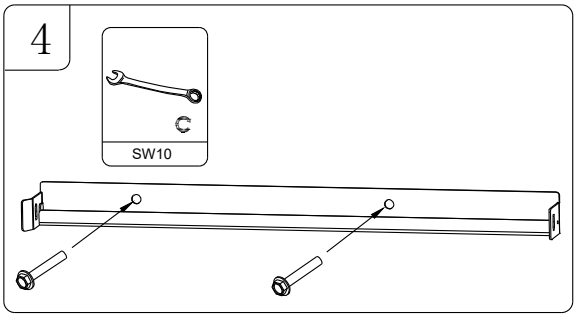

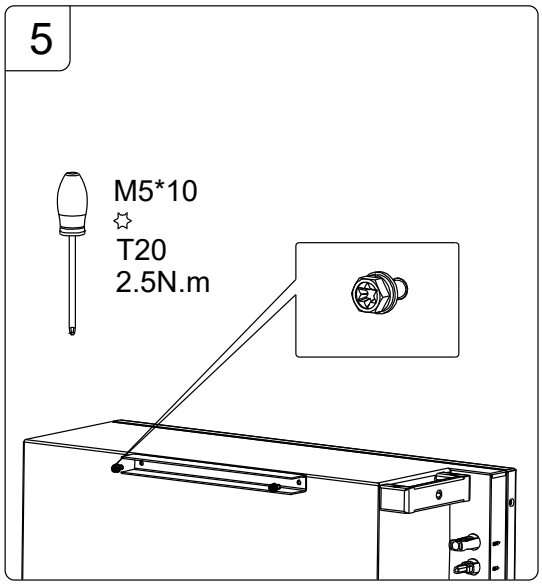

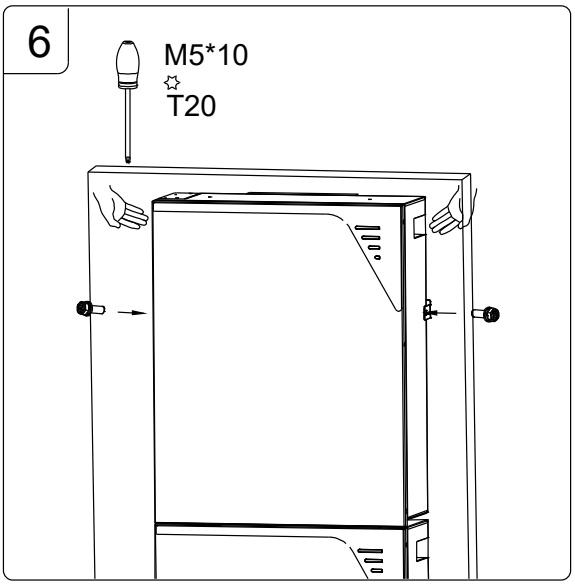

6.6. Electrical Connection

6.6.1. Grounding

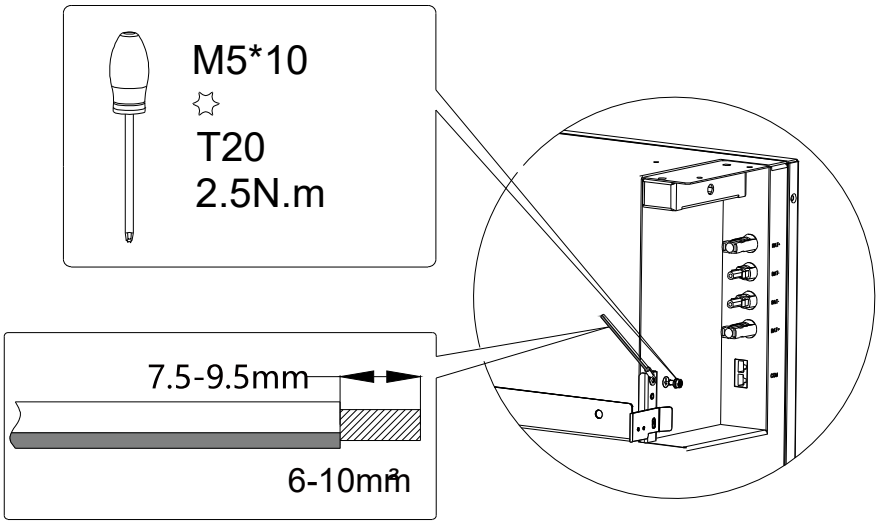

6.6.2. Electrical Connection Between Inverter and Batteries

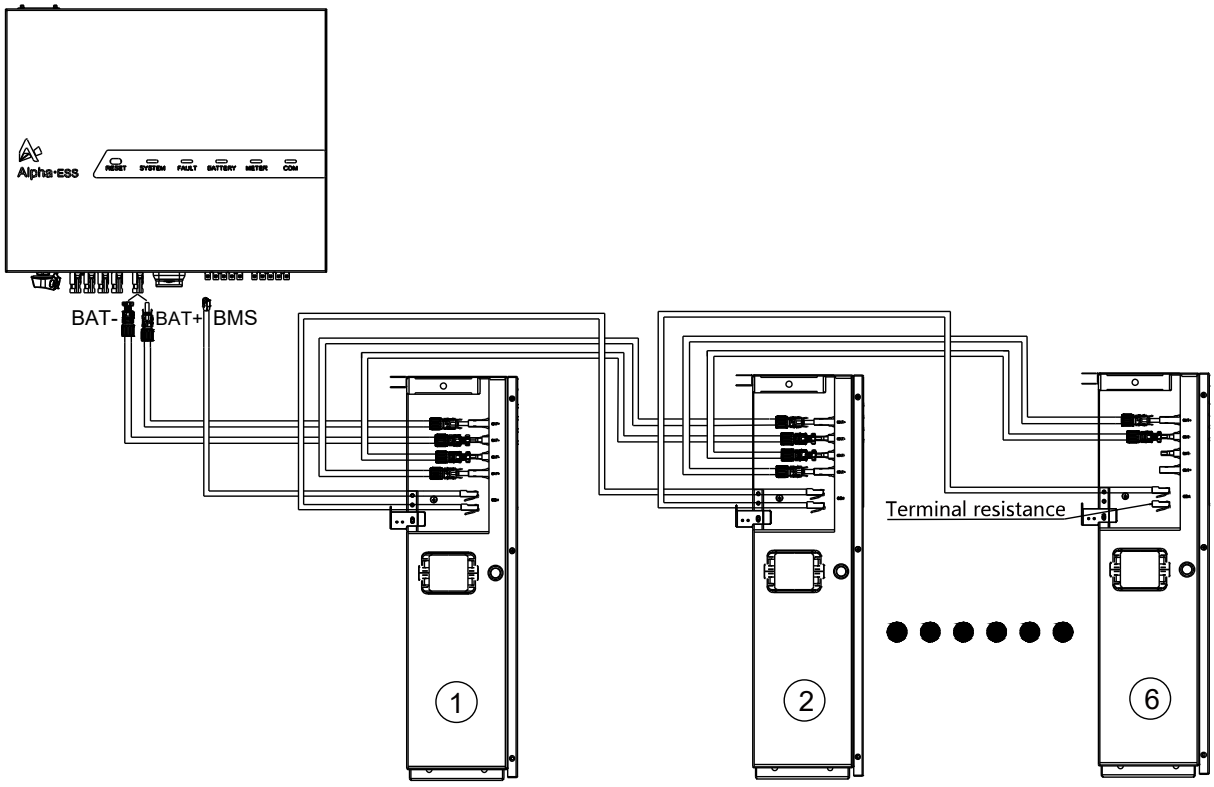

Commissioning

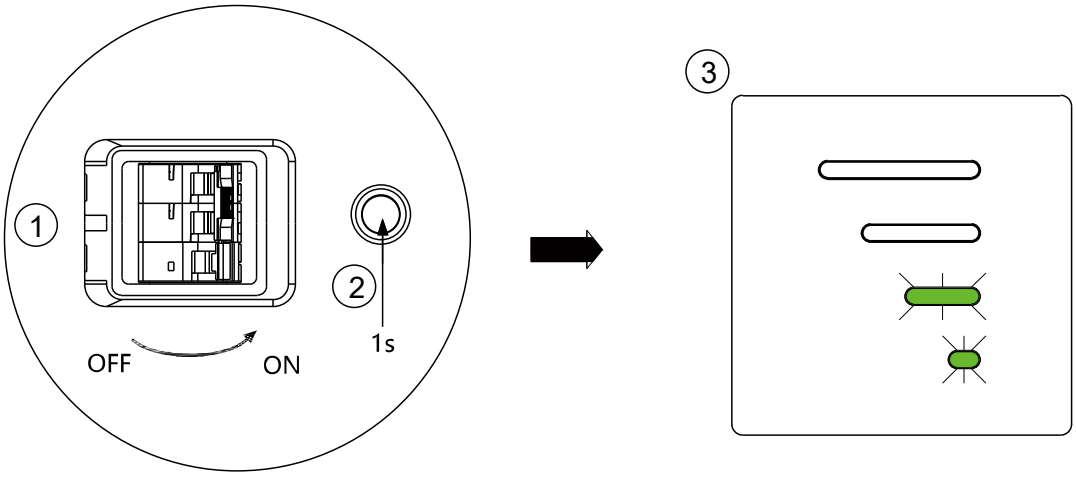

Green	√
Red	Contact service

7. Technical Data

@AlphaEnergyStorageSystem @AlphaESS @alpha_ess @AlphaESS www.alphaess.com

Alpha ESS Co., Ltd.

+86 513 8060 6891
info@alpha-ess.com
JiuHua Road 888, High-Tech Industrial Development Zone 226300 Nantong City, Jiangsu Province

Alpha ESS Suzhou Co., Ltd.

+86 512 6828 7609
info@alpha-ess.com
Building 10-A, Canal Town Industrial Park, 99 Taihu E Rd, Wuzhong District, Suzhou 215000

Alpha ESS Europe GmbH

+49 610 3459 1601
europe@alpha-ess.de
www.alpha-ess.de
Paul-Ehrlich-Straße 1a 63225 Langen

Alpha ESS Australia Pty. Ltd.

+61 1300 968 933
info@alpha-ess.com
Unit 1, 2 Ralph Street Alexandria NSW 2015

Alpha ESS Italy S.r.l.

+39 599 239 50
info@alpha-ess.com
Via Loda,17-41013 Castelfranco Emilia(MO)

Alpha ESS Korea Co., Ltd

+82 64 721 2004
info@alpha-ess.com
2F, 19-4, Nohyeong 11-gil, Jeju-si, Jeju-do, Republic of Korea

Alpha ESS UK Co., Ltd

+44 145 354 5222
info@alpha-ess.com
Drake House, Long Street, Dursley, gl11 4hh

Alpha ESS International Pte. Ltd.

Singapore@alpha-ess.com
2 Corporation Road #01-06A Corporation Place Singapore 618494

Alpha ESS USA, Inc.

info@alpha-ess.com
638 S Ahwanee Ter Sunnyvale, California, 94085 United States of America