AlphaESS
your smart energy

QUICK INSTALLATION GUIDE



SMILE-G3-BAT-3.6S
SMILE-G3-BAT-4.0S
V02

Legal Provisions

The information contained in these documents is the property of AlphaESS. No part of this document may be reproduced, stored in a retrieval system, or transmitted, in any form or by any means, be it electronic, mechanical, photographic, magnetic or otherwise, without the prior written permission of AlphaESS. Internal reproduction used solely for the purpose of product evaluation or other proper use is allowed and does not require prior approval.

AlphaESS makes no representations or warranties, express or implied, with respect to this documentation or any of the equipment and/or software it may describe, including (with no limitation) any implied warranties of utility, merchantability, or fitness for any particular purpose. All such representations or warranties are expressly disclaimed. Neither AlphaESS nor its distributors or dealers shall be liable for any indirect, incidental, or consequential damages under any circumstances. The exclusion of implied warranties may not apply in all cases under some statutes, and thus the above exclusion may not apply.

Specifications are subject to change without notice. Every attempt has been made to make this document complete, accurate and up-to-date. Readers are cautioned, however, that product improvements and field usage experience may cause AlphaESS to make changes to these specifications without advance notice or per contract provisions. AlphaESS shall not be responsible for any damages, including indirect, incidental or consequential damages, caused by reliance on the material presented, including, but not limited to, omissions, typographical errors, arithmetical errors or listing errors in the content material.

1 Information on this Document

1.1. Validity

This document is valid for the SMILE-G3-BAT-3.6S, SMILE-G3-BAT-4.0S.

1.2. Target Group

The instructions in this document may only be performed by qualified persons who must have the following skills:

- Knowledge of how batteries work and are operated
- Knowledge of how an inverter works and is operated
- Knowledge of, and adherence to the locally applicable connection requirements, standards and directives
- Knowledge of, and adherence to this document and the associated system documentation, including all safety instructions
- Training in dealing with the hazards associated with the installation and operation of electrical equipment and batteries
- Training in the installation and commissioning of electrical equipment

Failure to do so will make any manufacturer's warranty, guarantee or liability null and void unless you can prove that the damage was not due to non-compliance.

1.3. Content and Structure of this Document

This document contains safety information and instructions on installing, connecting and commissioning. Please finish reading this document before performing any actions on the product.

The latest version of this document and the comprehensive system manual for mounting, installation, commissioning, configuration and operation can be found in the Document Center on AlphaCloud/AlphaESS App.

Illustrations in this document are reduced to the essential information and may deviate from the real product.

2 Safety

2.1. Intended Use

This product is for residential and small business use and works with a PV plant.

It is a high-voltage Li-ion battery. It could be operated in either off-grid or on-grid mode with compatible inverters.

This product could be connected to the Internet through the inverter for maintenance and software updates.

This product must only be used as stationary equipment.

This product is suitable for both indoor and outdoor use.

This product can only work with compatible inverters and you can find the compatible inverter list on AlphaESS's official website.

This product is not suitable for supplying life-sustaining medical devices. Please ensure that no personal injury would be inflicted due to the power outage of the system.

Alterations to the AlphaESS product, e.g. changes or modifications are not allowed unless a written permission from AlphaESS is obtained.

Any use of the product other than that described in the Intended Use section does not qualify as the intended use.

The attached document is an integral part of this product. Keep the documentation in a convenient, dry place for future reference and observe all instructions contained therein.

The type label should be always attached to the product.

2.2. Important Safety Instructions

This product has been designed and tested under international safety requirements. However, to prevent personal injury and property damage and ensure the long-term operation of this product, please read this section carefully and observe all safety information at all times.

2.2.1. Battery Pack

If the batteries leak electrolyte, direct contact with the leaking liquid or gas should be avoided. The electrolyte is corrosive and the contact may cause skin irritation and chemical burns. If one is exposed to the leaked substance, please follow these instructions:

Inhalation: Evacuate the contaminated area, and seek medical help immediately.

Eye contact: Rinse eyes with flowing water for 15 minutes, and seek medical help immediately.

Skin contact: Wash the affected area thoroughly with soap and water, and seek medical help immediately.

Ingestion: Induce vomiting, and seek medical help immediately.

2.2.2. Firefighting Measures

The batteries may catch fire when it is put into fire. In case of a fire, please make sure that an ABC or carbon dioxide extinguisher is nearby. Do not use water to extinguish the batteries on fire.

Full protective clothing and self-contained breathing apparatus are required for the firefighters to extinguish the fire.

2.2.3. Battery Packs Handling and Storage Guide

- The batteries and their components should be protected from damage when transporting and handling.
- Weight of the battery may cause injury risk, please take the weight of this product into account during transportation and lifting.
- Do not impact, pull, drag or step on the batteries.
- Do not insert unrelated objects into any part of the batteries.
- Do not throw the batteries into a fire.
- Do not soak the batteries in water or seawater.
- Do not expose to strong oxidizers.
- Do not short-circuit the batteries.
- The batteries cannot be stored at high temperatures (≤60 ℃).
- The battery cannot be stored in direct sunlight.
- The batteries cannot be stored in a high-humidity environment.
- Do not use the batteries if they are defective, appear cracked, broken or otherwise damaged, or fail to operate.
- Do not attempt to open, disassemble, repair, tamper with, or modify the batteries. The batteries are not user serviceable.
- Do not use cleaning solvents to clean the batteries.

2.2.4. Warning of Electric Shock

It is a danger to life due to electric shock when live components or DC cables are touched.

The DC cables connected to this product may be live. Touching live DC cables results in death or serious injury due to electric shock.

- Disconnect the battery from the voltage source and make sure it cannot be reconnected before working on the device.
- Do not touch non-insulated parts or cables.
- Do not disconnect the battery power connectors under load, an electric arc may occur leading to electric shock and burns.
- Wear suitable personal protective equipment for all work on the battery pack.

2.2.5. Notice of Property Damage

If the product doesn't start at all, please contact AlphaESS service as soon as possible. Otherwise, the battery could be permanently damaged.

2.2.6. Surge Protection

Over-voltages (e. g. in the event of a flash of lightning) can be further conducted into the building and to other connected devices in the same network via the network cables or other data cables if there is no surge protection.

Ensure that this product is integrated into the existing surge protection.

2.2.7. Safety Information of the Inverter Manufacturer

Please read and observe all safety information of the inverter manufacturer.

3 Symbols on the Product

Symbol	Explanation
	Beware of a danger zone This symbol indicates that the product must be additionally grounded if additional grounding or equipotential bonding is required at the installation site.
	Beware of electrical voltage The product operates at high voltages.
	Risk of chemical burns.
	Risk of explosion.
	Risk of electrolyte leakage.
	Fire, naked light and smoking are prohibited. Keep the battery modules away from open flame or ignition sources.
	Install the product out of reach of children.

Symbol	Explanation
	Do not short-circuit.
	WEEE designation Do not dispose of the product together with the household waste but in accordance with the disposal regulations for electronic waste applicable at the installation site.
	Observe the documentation Observe all documents supplied with the system.
	Refer to the instruction for operation.
	Use eye protection
	CE marking The product complies with the requirements of the applicable EU directives.
	RCM (Regulatory Compliance Mark), a brief guide to Electrical equipment approvals in Australia.
	The relevant device equipment conforms to the requirements specified in UK Directives.

4 EU Declaration of Conformity

Within the scope of the EU directives

- Electromagnetic Compatibility Directive 2014/30/EU (EMC)
- Electrical Apparatus Low Voltage Directive 2014/35/EU (LVD)
- Restrictions of Hazardous Substances Directive 2011/65/EU and (EU) 2015/863 (RoHS)
- Waste Electrical and Electronic Equipment 2012/19/EU
- Registration, Evaluation, Authorization and Restriction of Chemicals (EC) No 1907/2006 (REACH)

AlphaESS confirms herewith that the products described in this document are in compliance with the fundamental requirements and other relevant provisions of the above-mentioned directives. The entire EU Declaration of Conformity can be found at www.alphaess.com.

5 UK Declaration of Conformity

According to the regulations of England, Wales and Scotland

- Radio Equipment Regulations 2017
- The Restriction of the Use of Certain Hazardous Substances in Electrical and Electronic Equipment Regulations 2012

AlphaESS confirms herewith that the products described in this document are in compliance with the fundamental requirements and other relevant provisions of the above-mentioned regulations. The entire UK Declaration of Conformity can be found at www.alphaess.com.

6 Instructions

6.1. Product Overview

6.1.1. Interface

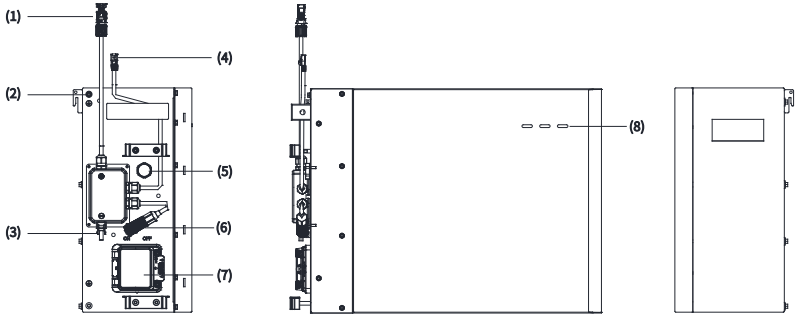

(1) BAT + Power Connector
(2) Grounding Point
(3) BAT - Power Connector
(4) BMS COM1
(5) Pressure Relief Vent
(6) BMS COM2 (with terminal resistance)
(7) Battery Circuit Breaker
(8) LED Display

6.1.2. LED Display

SOC Display
During normal operation of battery, three LED indicators on the front cover provide information about the SOC of the battery with white lights glowing, off or flashing.

: White LEDs are flashing (0.5s on,1.5s off) : White LEDs are glowing : White LEDs off

LED Indicator	No.	SOC	Description
LEDs show the SOC status	1		SOC≤10%
	2		10%＜SOC≤30%
	3		30%＜SOC≤50%
	4		50%＜SOC≤60%
	5		60%＜SOC≤90%
	6		90%＜SOC≤100%

State Display

The LEDs indicate the operating state of the product.

Standby: all white LEDs are flashing (0.5s on and 0.5s off).

Normal: white LEDs are glowing or flashing (0.5s on and 1.5s off).

Protection: yellow LEDs are glowing or flashing (0.5s on and 0.5s off).

Error: yellow LEDs are glowing or flashing (0.5s on and 0.5s off).

Shutdown: all LEDs are off.

Protection Display

The three LED indicators on the front cover provide information about the protection status of the battery.

: Yellow LEDs are flashing (0.5s on and 0.5s off) : Yellow LEDs are glowing : Yellow LEDs off

LED Display State	Description	Troubleshooting
	Temperature difference	Wait for automatic recovery. If the problem persists, please call technical service.
	High temperature	Stop discharging and charging until this display status is eliminated and wait for the temperature to drop.
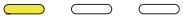	Low temperature discharge	Stop discharging until this display status is eliminated and wait for the temperature to rise.
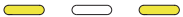	Overcurrent charge	Wait for automatic recovery. If the problem persists, please call technical service.
	Overcurrent discharge	
	Cell overvoltage	
	Cell under voltage	Stop discharging and call technical service immediate-ly.
	Low temperature charge	Stop charging until this display status is eliminated and wait for the temperature to rise.

NOTICE

During work mode, if the protection status “Cell under voltage”  appears, please take the following action:
first, switch off the breaker which is located on the left side of the battery, switch onthe breaker and wait for 3~5s, switch off the breaker, then switch on the breaker and wait for 3~5s, switch off the breaker, at last switch on the breaker of the battery, the BMS will be forced to turn on the MOSFET of discharge so that the energy storage inverter can detect the battery open voltage and charge the battery.

Error State

The three LED indicators on the front cover provide information about the error status of the battery.

: Yellow LEDs are flashing (0.5s on and 0.5s off) : Yellow LEDs are glowing : Yellow LEDs off

LED Display State	Description	Troubleshooting
	Hardware error	Wait for automatic recovery. If the problem persists, please call technical service.
	Hardware error	
	Circuit breaker open	Switch on the circuit breaker after powering off the battery.
	LMU disconnect (Follower)	Reconnect the BMS communication cable.
	SN missing	Call technical service.
	LMU disconnect (Host)	Reconnect the BMS communication cable.
	Software version inconsistent	Call technical service.
	Multi-Host	Restart all batteries.
	MOS Overtemperature	Power off the battery, and power on the battery after 30 minutes.
	Insulation fault	Restart battery. If the problem persists, call technical service.
	Total voltage fault	Restart battery. If the problem persists, call technical service.
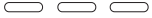	Precharge failure	Restart battery. If the fault persists, please call technical service.

6.2. Dimensions

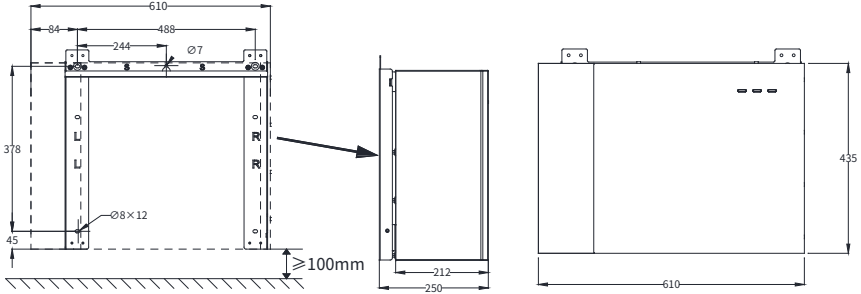

6.3. Scope

- Reserve sufficient space around the energy storage system to ensure sufficient space for installation, maintenance and heat dissipation.
- The side clearance is a recommendation which can be adjusted according to the end users' requirements. Clearances may be up to 100mm less than noted if ventilation is adequate and no restrictions or objects will limit access to the labelling or switches of the Product or to the use of tools to remove covers or service/remove the Product.

For installations in Australia, in accordance with ASNZ5139-2019-4.2.2.2, a non-combustible material must be placed between the wall and the battery unit. This material should extend 600mm to the left and right of the battery and 900mm above it.

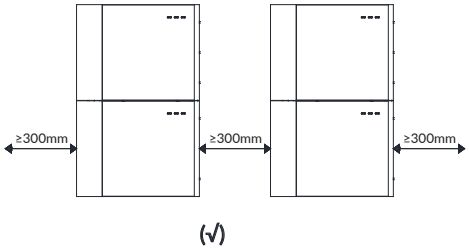

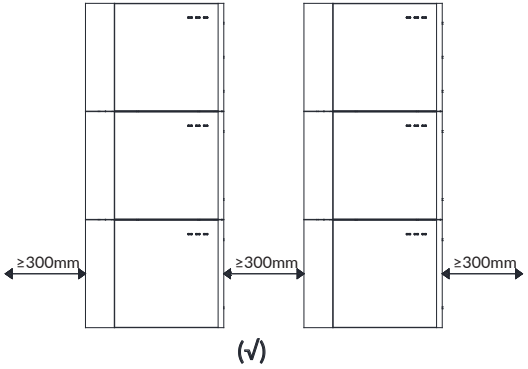

6.4. Scope of Delivery

SMILE-G3-BAT-3.6S/4.0S						
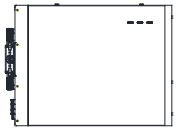		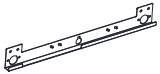			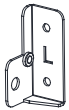	
Battery (X1)	Battery Cable Cover (X1)	Top Beam of Wall Bracket (X1)	Right Beam of Wall Bracket (X1)	Left Beam of Wall Bracket (X1)	Left Holder for Wall Bracket (X1)	Right Holder for Wall Bracket (X1)
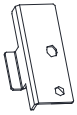				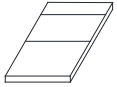	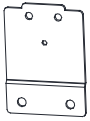	
Grounding Bar (X1)	Wall Anchor ST6*55 (X6)	Screw M5*12 (X6)	Flange Nut M5 (X7)	Quick Installation Guide (X1)	Connector for Wall Brackets* (X2)	

* For battery-ready application, serving as a connection between the wall bracket of SMILE-G3-T4/T6/T8/T10-INV and the wall bracket of SMILE-G3-BAT-3.6S&4.0S.

Accessories for Base unit of SMILE-G3-BAT-3.6S/4.0S				
	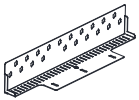	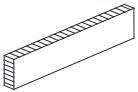		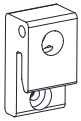
Base Unit (X1)	Wall Bracke (X1)	Position Plate (X1)	Right Connection Plate (X6)	Right Connection Plate for Base Unit (X1)

Accessories for Base unit of SMILE-G3-BAT-3.6S/4.0S				
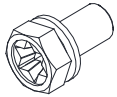			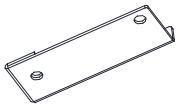	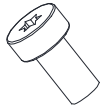
Screw M5*12 (X20)	Limit block (X12)	Screw M5*8 (X15)	Right Connection Plate* (X4)	Hexagon Head Limit Screw M5*10** (X10)

*Only for SMILE-G3-BAT-3.8S
**Only for SMILE-G3-BAT-3.8S

Accessory Cables for Distanced Horizontal Battery Expansion of SMILE-G3-BAT-3.6S/3.8S/4.0S		
		
Series Battery Main Negative Power Cable (X1)	Communication Cable Between Series Batteries (X1)	Power Cable Between Two Column Series Batteries (X1)

6.5. Mounting Location Requirements

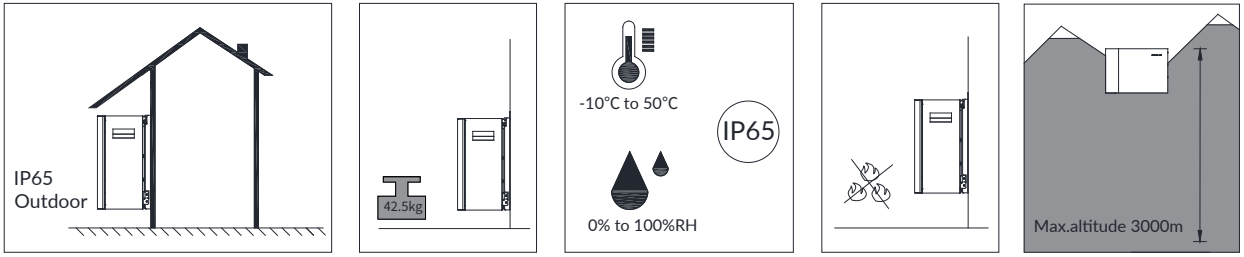

6.6.Installation

6.6.1 Wall Bracket Installation

One Battery Installation

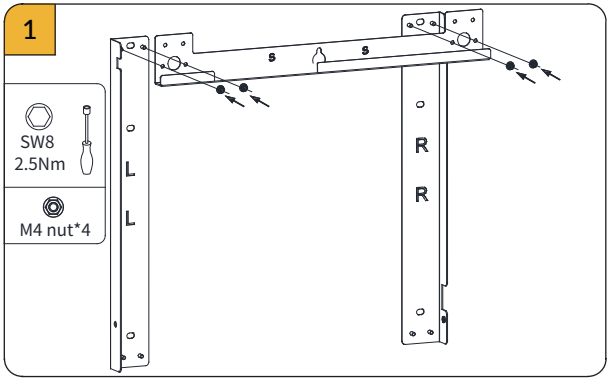

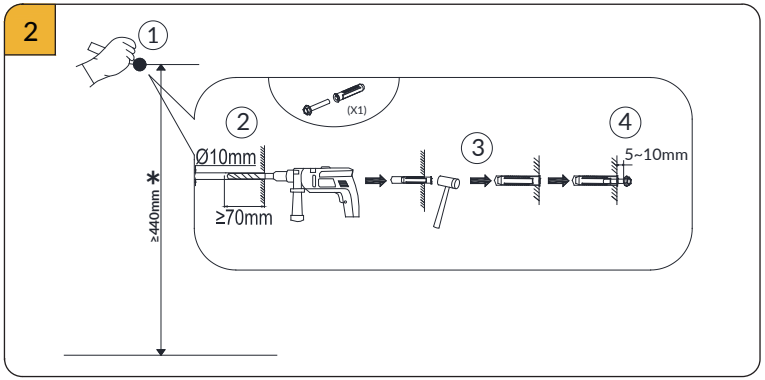

***This recommended value is for wall bracket location of the bottom battery.**

Depends on the number of expansion batteries mounted later.

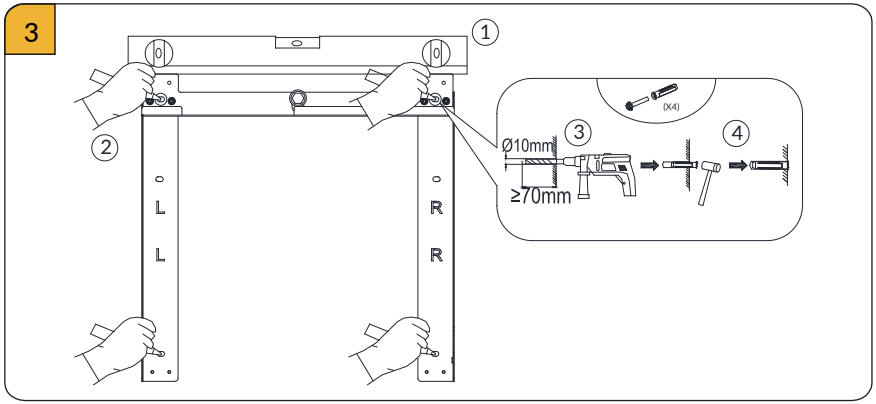

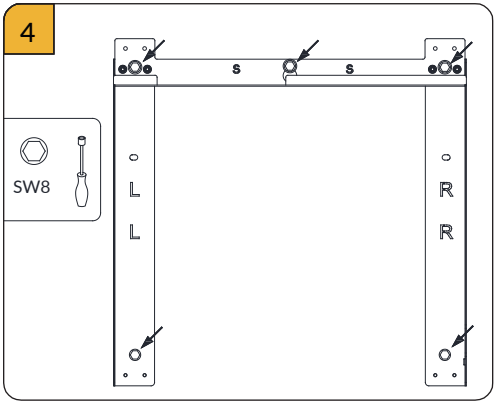

5

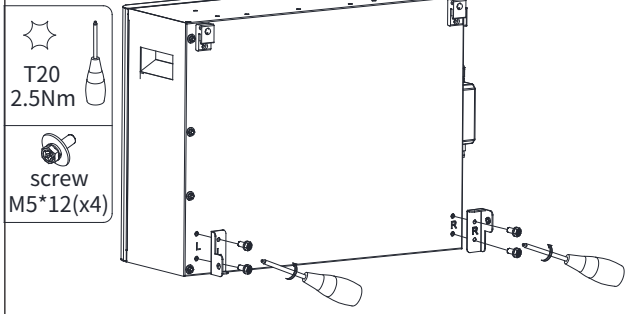

6

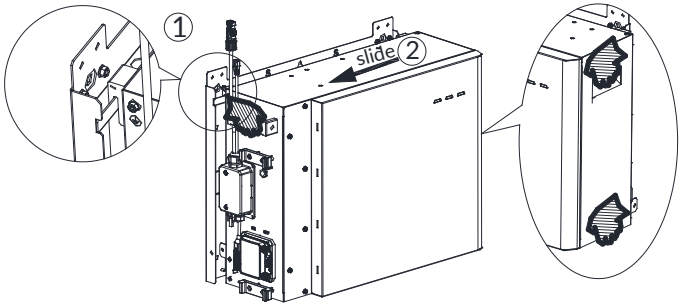

7

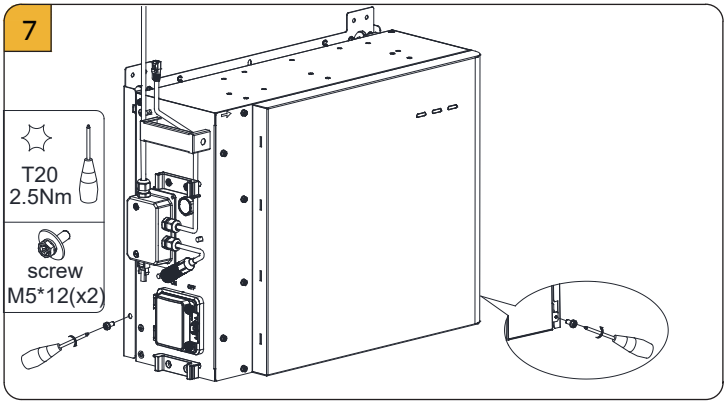

Multiple Batteries Installation

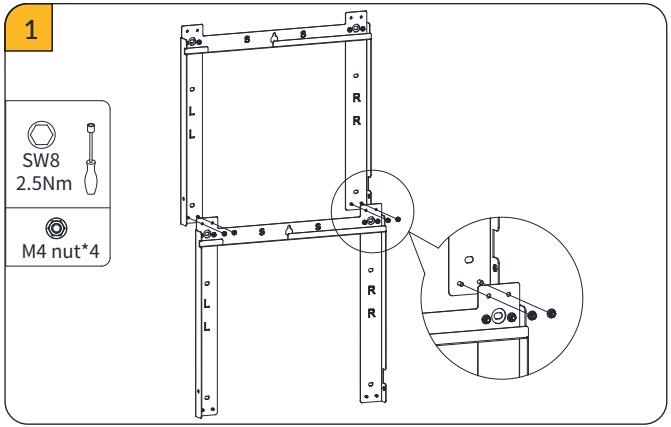

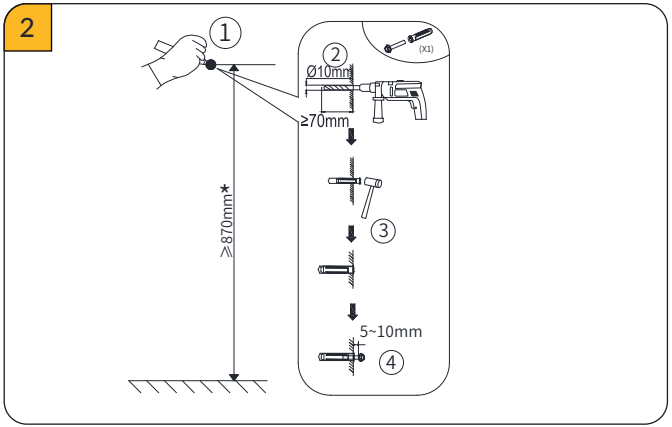

*This recommended value applies to the positioning of the second battery's wall bracket when viewed from the bottom up. Depends on the number of expansion batteries mounted later.

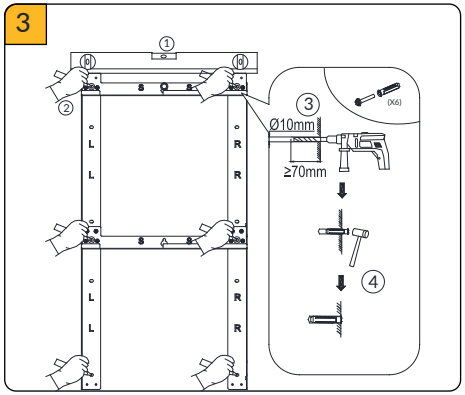

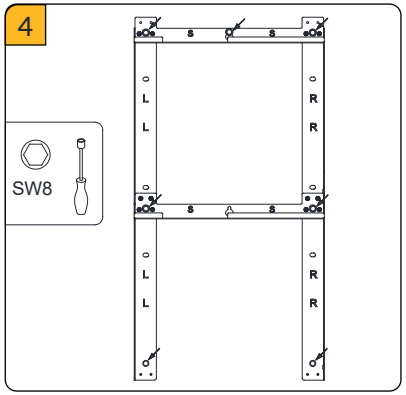

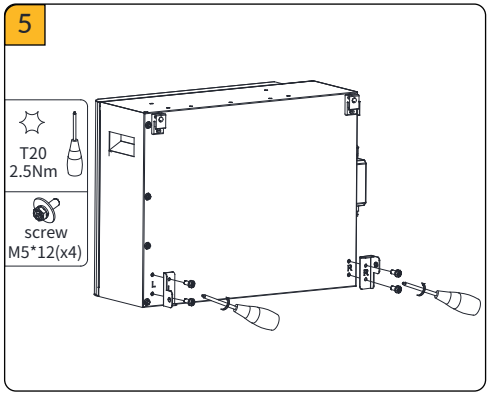

6

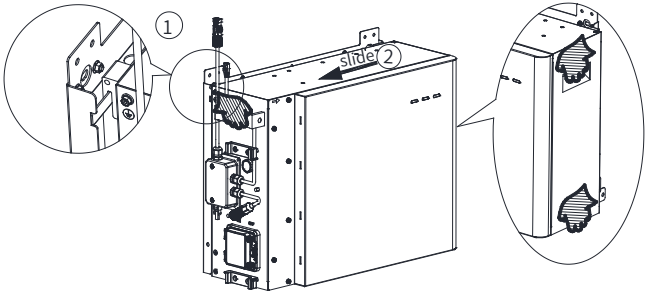
1
slide
2

7

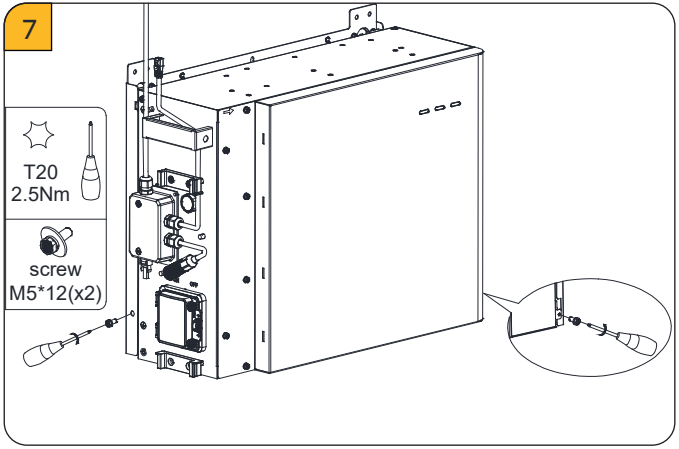
T20
2.5Nm
screw
M5*12(x2)

8

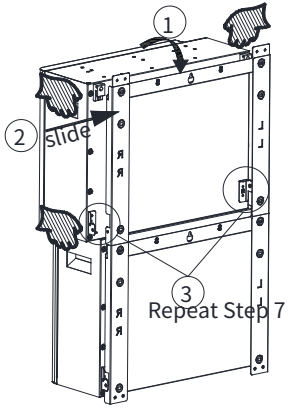
1
2
slide
3
Repeat Step 7

9

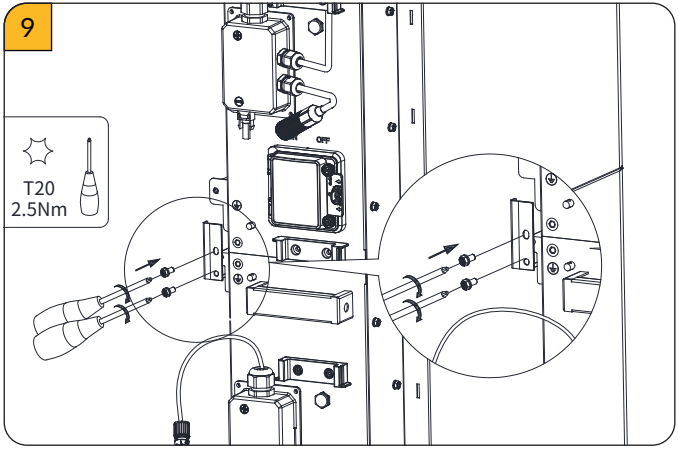
T20
2.5Nm

Expansion Batteries Installation

Expansion batteries should be mounted below the existing wall-mounted batteries.

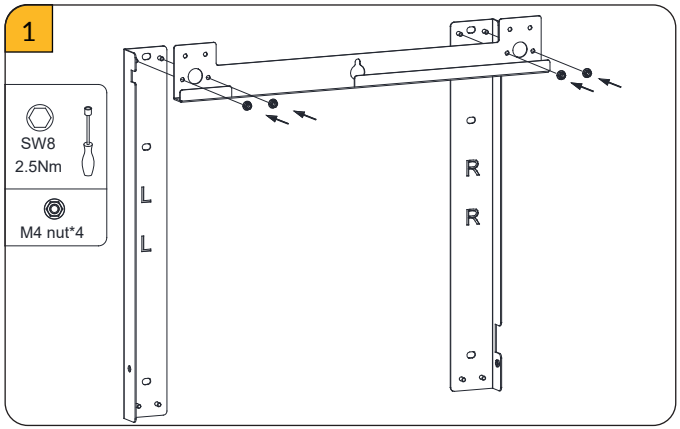

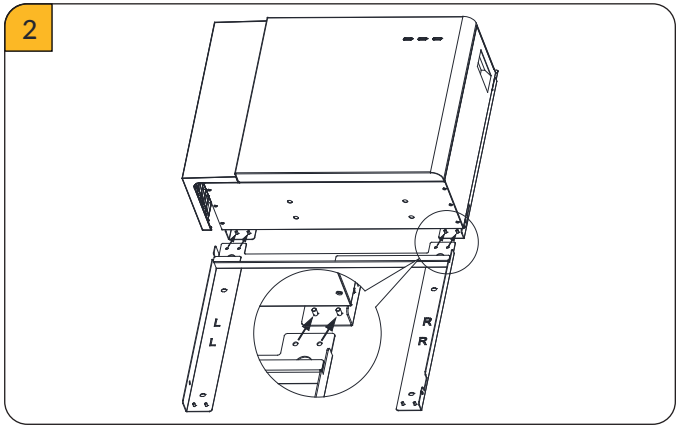

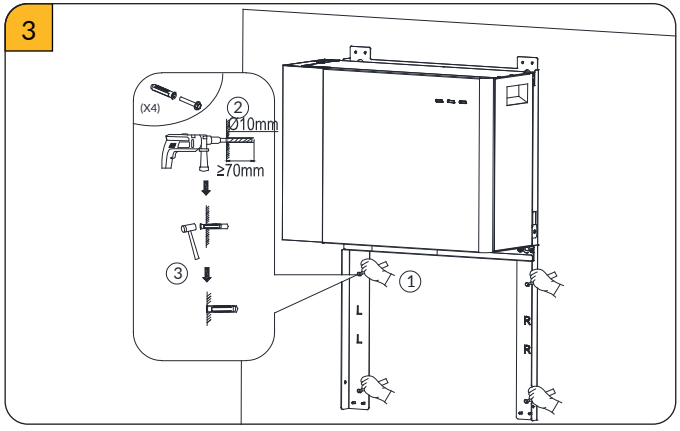

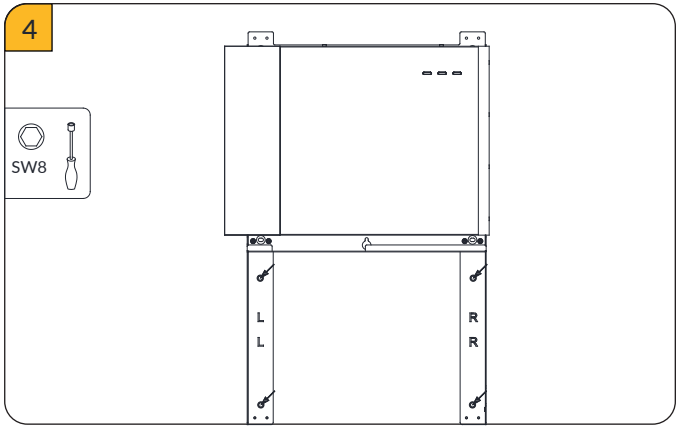

5

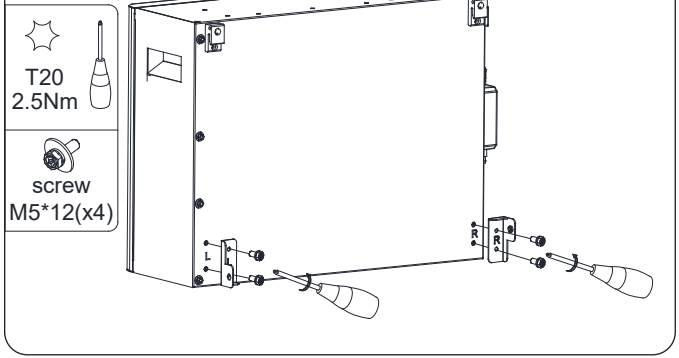
T20
2.5Nm
screw
M5*12(x4)

6

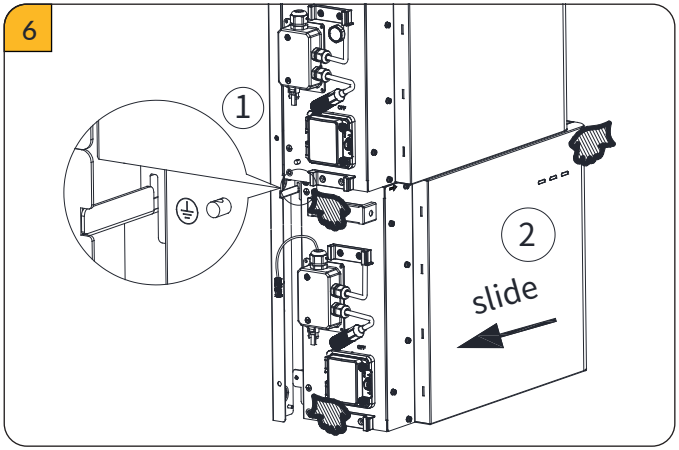
1
2
slide

7

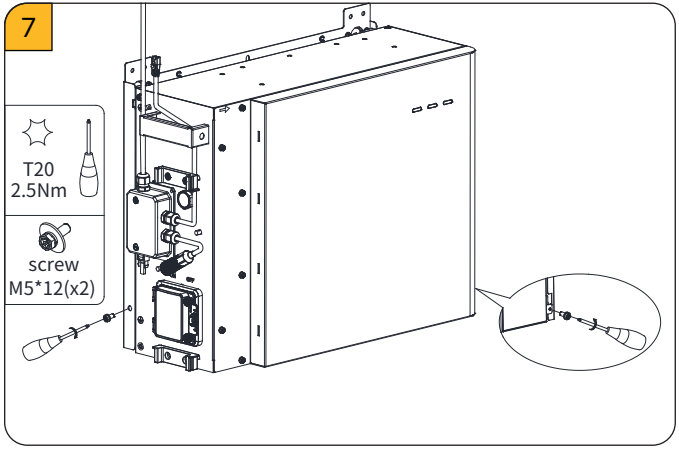
T20
2.5Nm
screw
M5*12(x2)

8

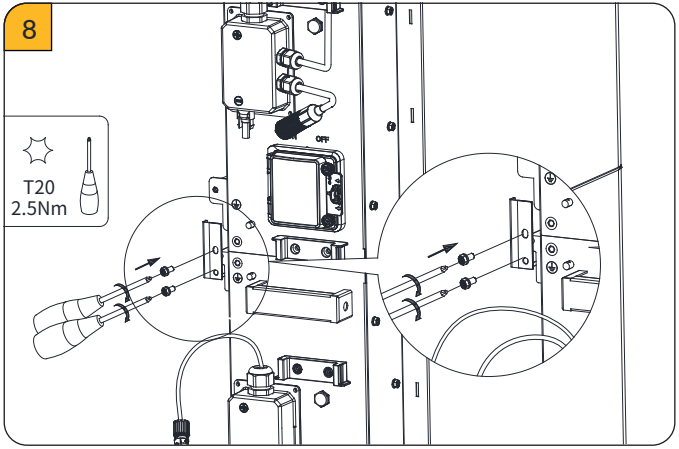
T20
2.5Nm

First Battery Installation for Battery-Ready Application

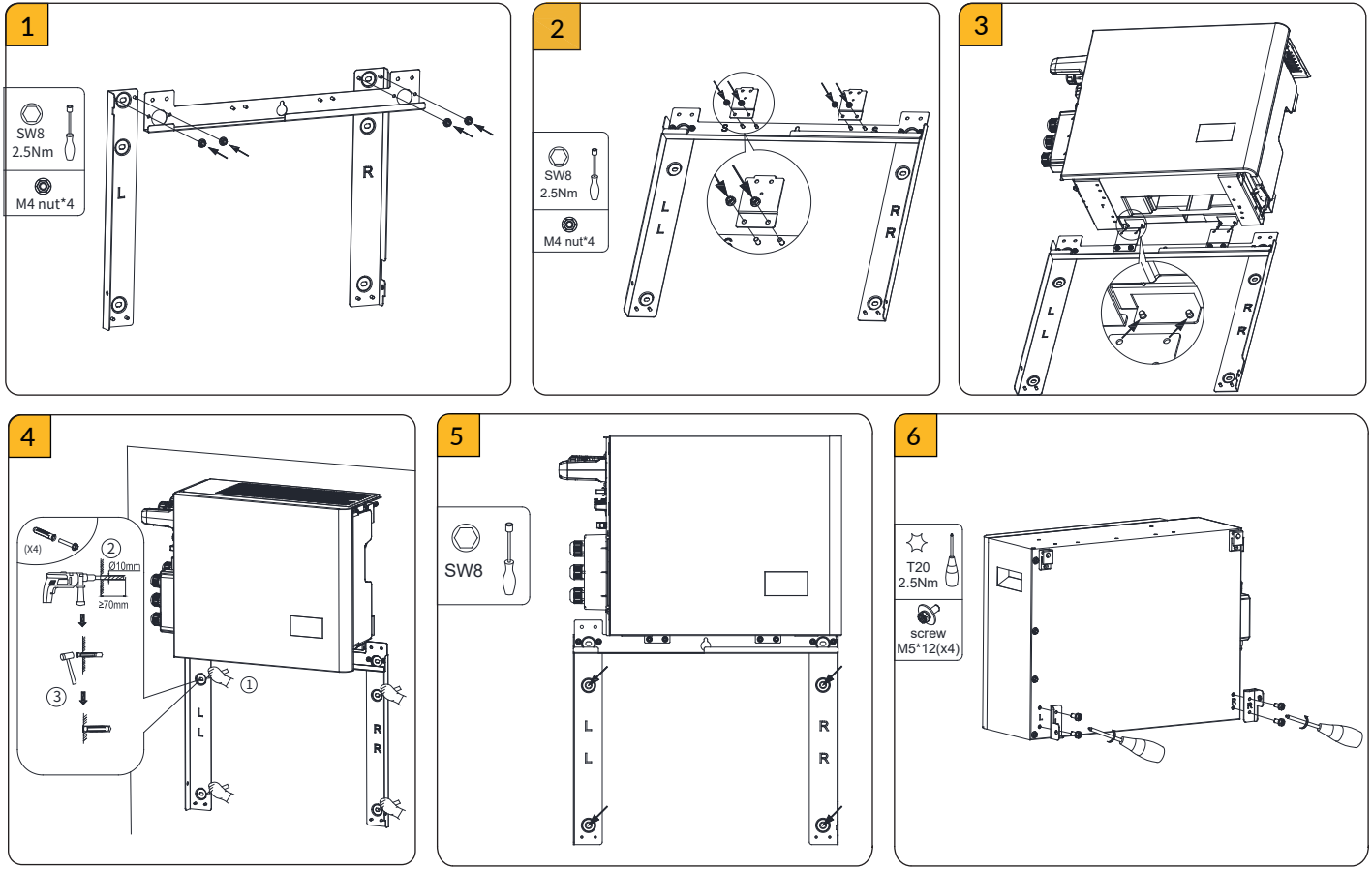

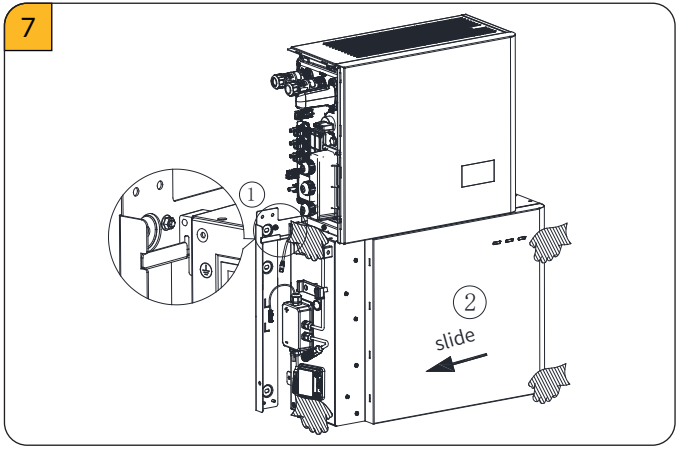

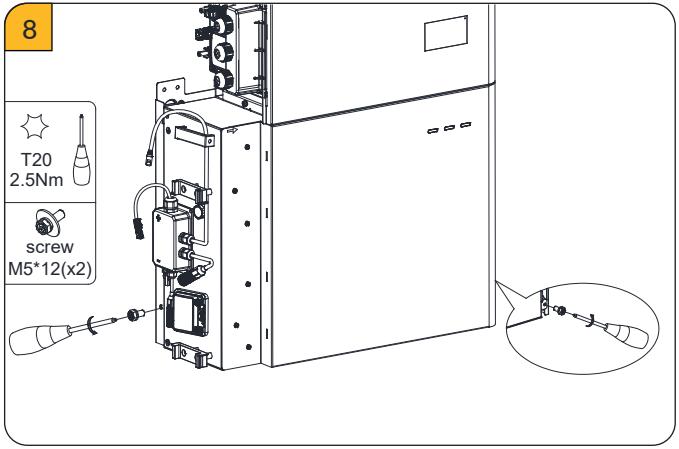

For more expansion batteries installation in a single column system installation scenario, please refer to the previous chapter.

Wall-Mounted Battery Disassembling

CAUTION

Risk of injury due to the weight of the battery

Incorrectly lifting or dropping the battery during transportation, mounting, or disassembling may lead to injuries.

- Transport and lift the battery carefully. Take the weight of the product into account.
- Always have two or more people to mount and disassemble the product.
- Wear suitable personal protective equipment for all work on the product.

When disassembling the battery that has been mounted with a wall bracket and has not directly connected to the inverter, always hold the handles on both sides of the battery firmly and slide it to the right. Once the arrow on the upper left of the cover aligns with the left protruding side of the upper battery, carefully lift the battery forward and off the wall bracket.

1

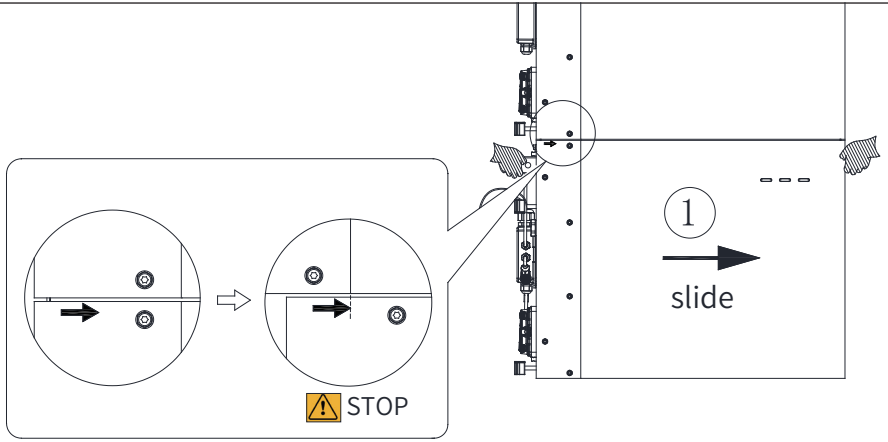

2

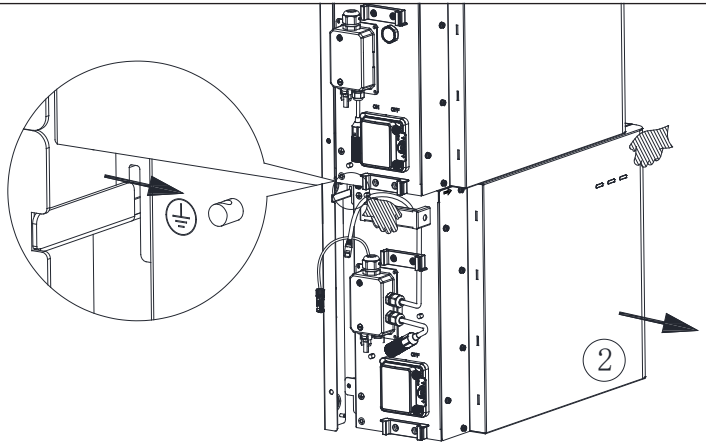

6.6.2 Base Installation (Optional)

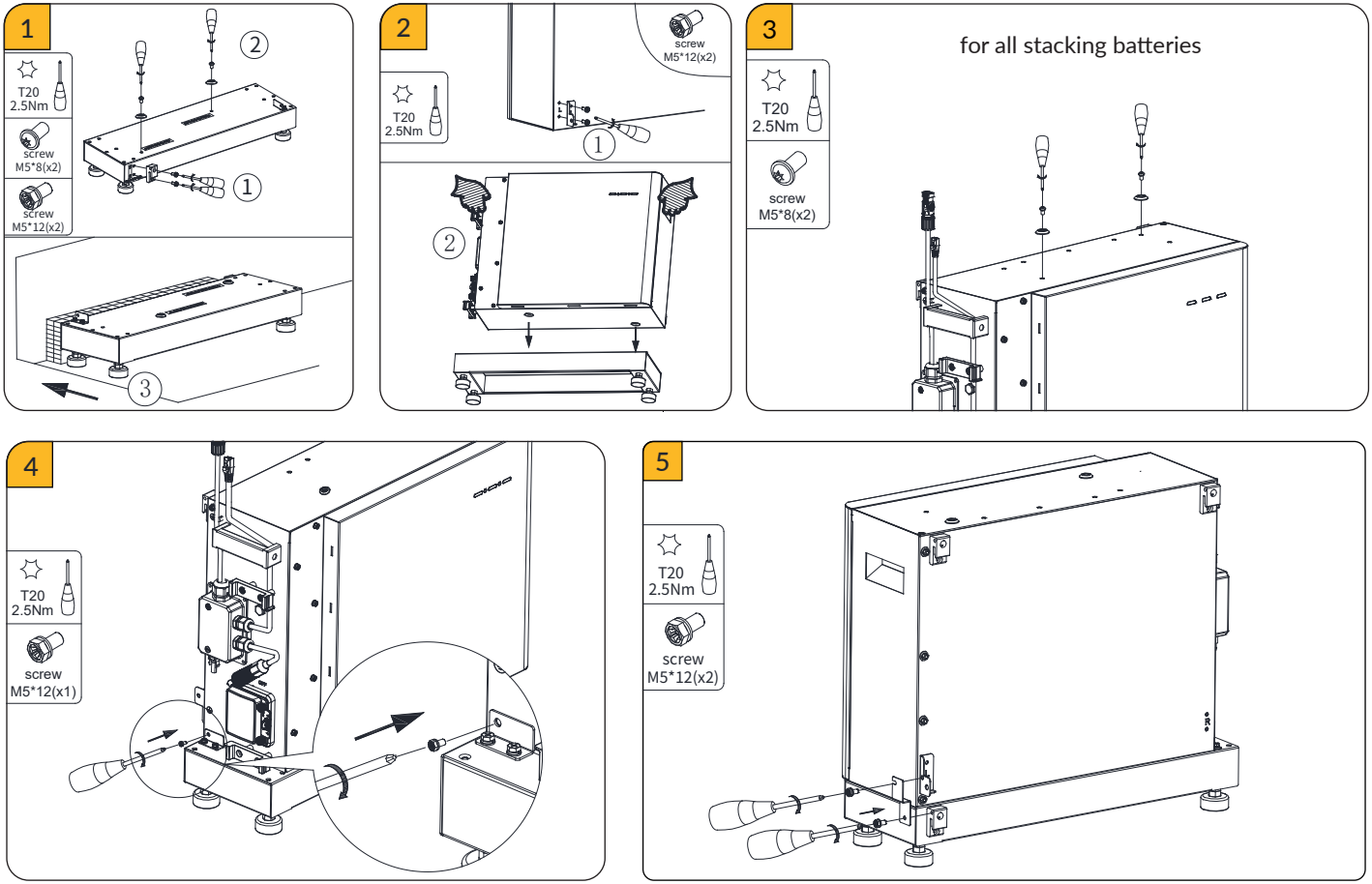

6

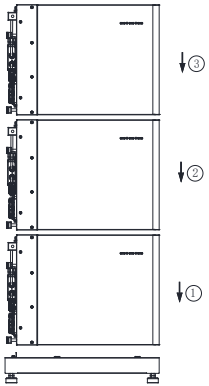

7

T20
2.5Nm

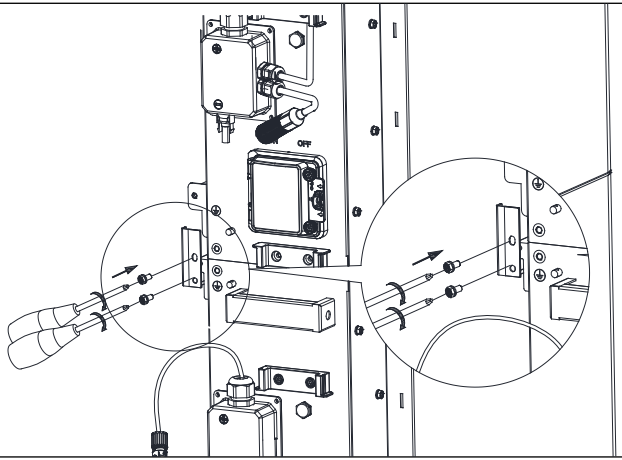

8

T20
2.5Nm

screw
M5*12(x2)

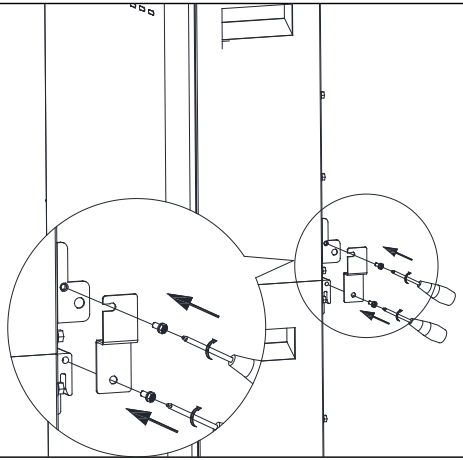

9

T20
1.5Nm

screw
M5*12(x3)

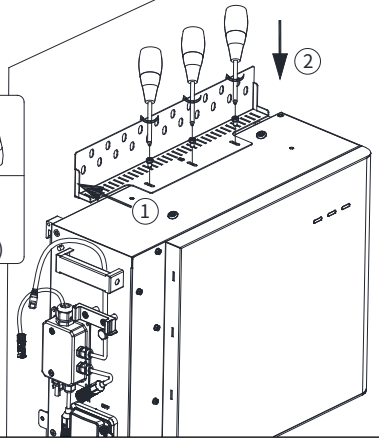

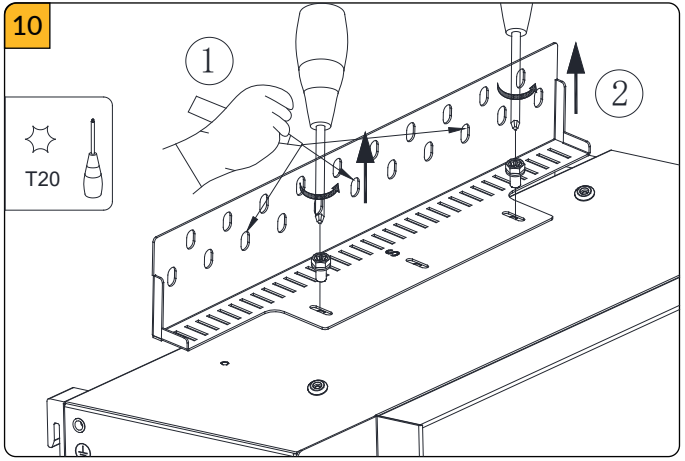

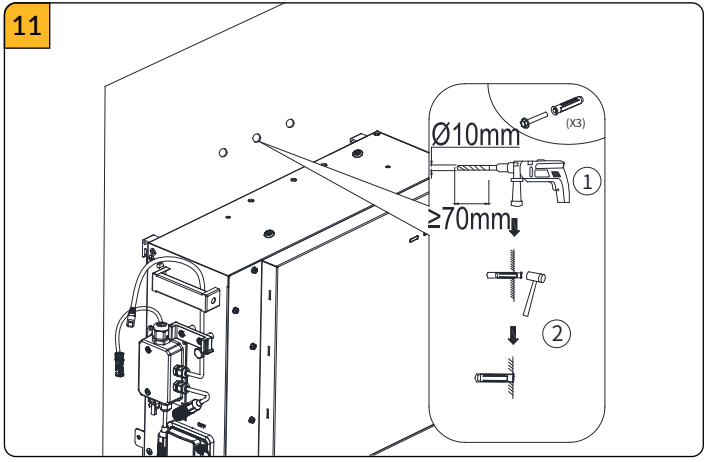

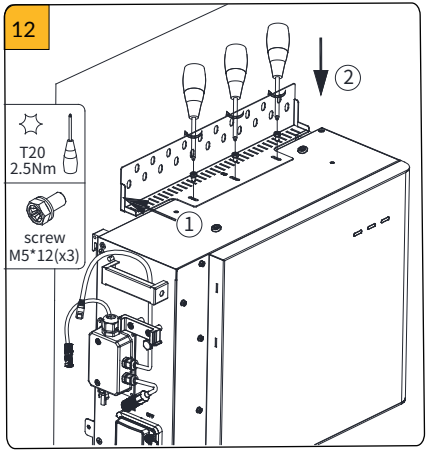

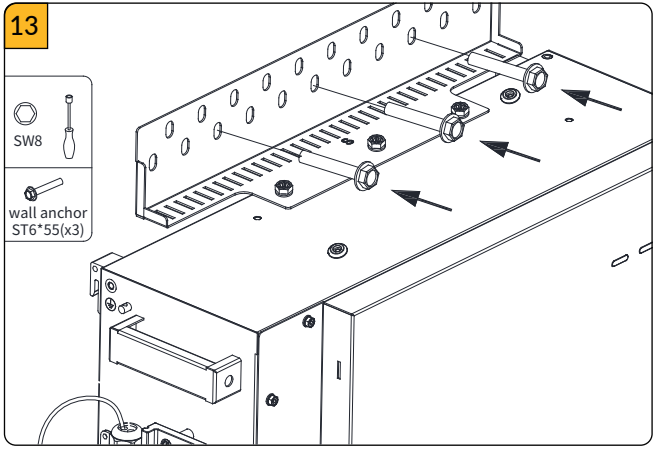

1 to 4 batteries are suitable for the SMILE-G3 single-phase energy storage inverter.

2 to 6 batteries are suitable for the SMILE-G3 three-phase energy storage inverter.

6.7. Electrical Connection

Electrical Connection between the Inverter and the Batteries

DANGER

Danger to life due to short-circuiting of the battery

- Switch off the battery breaker which is located at the lower part on the left side of the battery.
- The upper connector of the battery is connected to the lower connector of the upper battery, otherwise, the short-circuiting of the battery will occur.

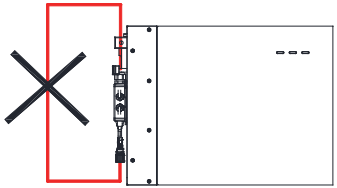

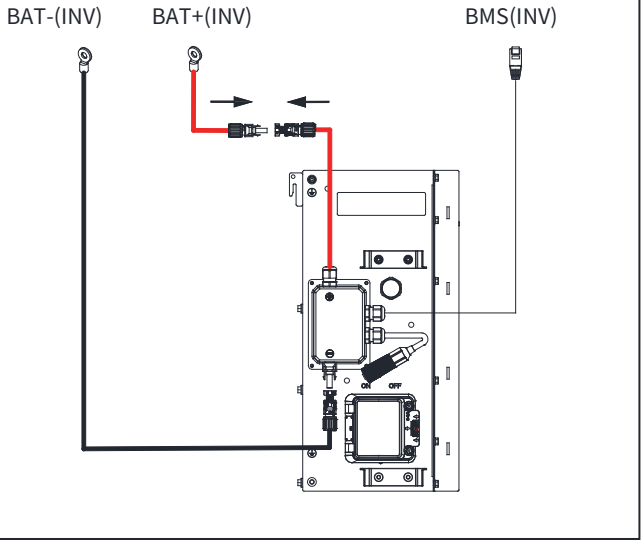

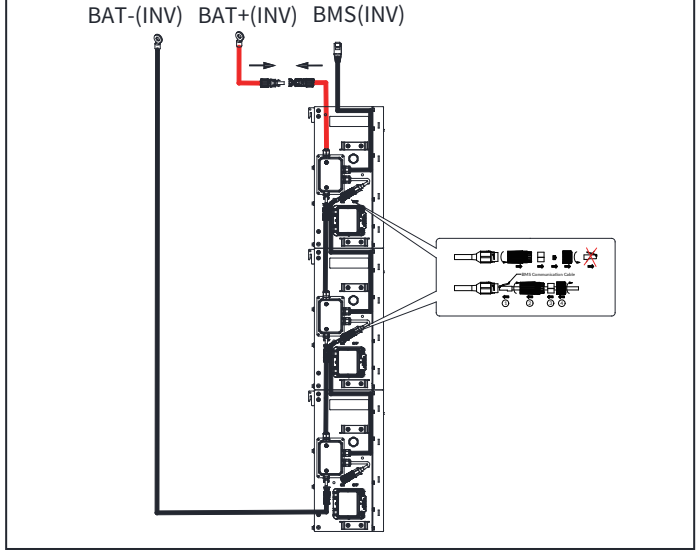

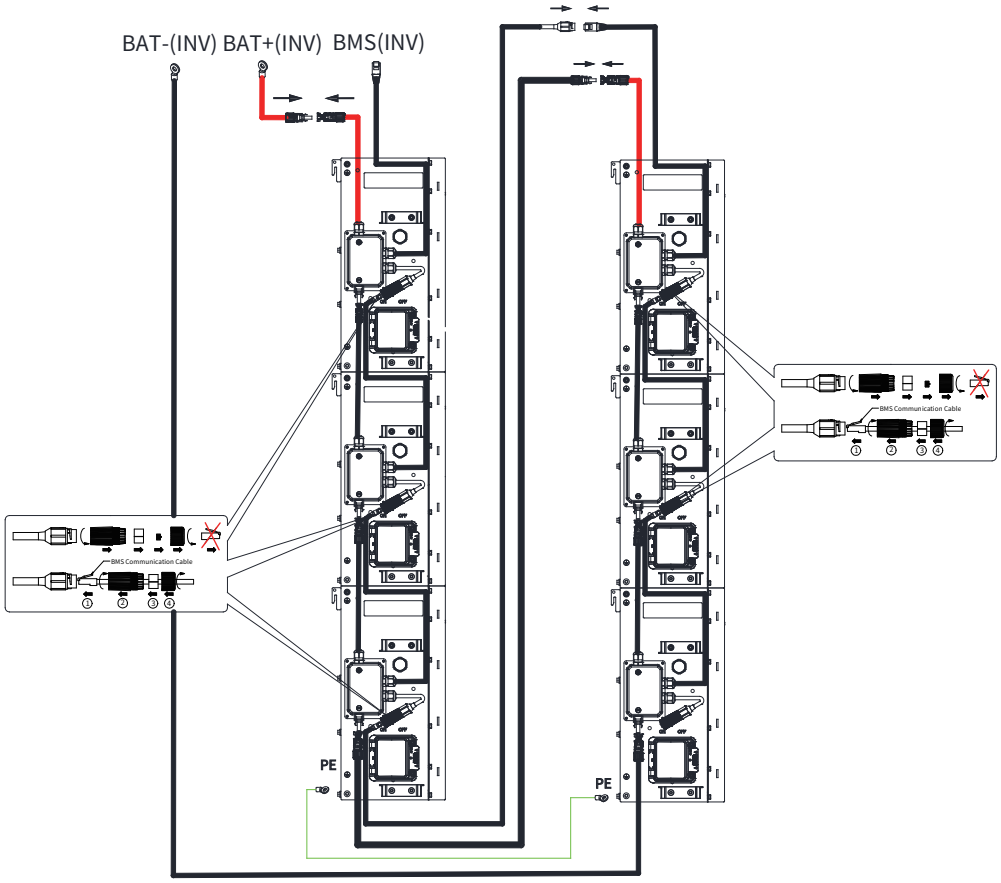
BAT-(INV)
BAT+(INV)
BMS(INV)
BMS Communication Cable
BMS Communication Cable
PE
PE

6.8. Install the Cable Cover

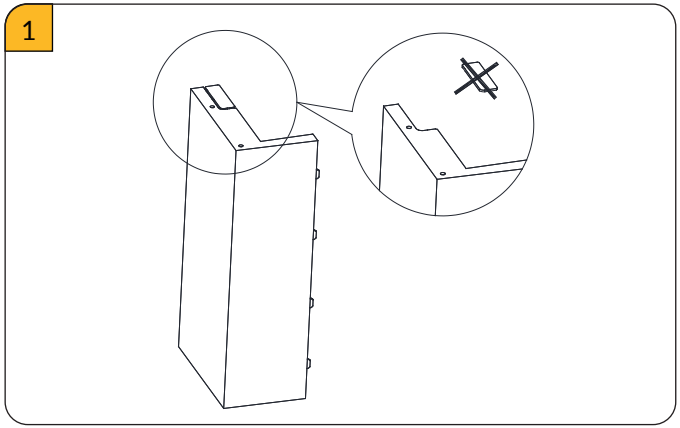

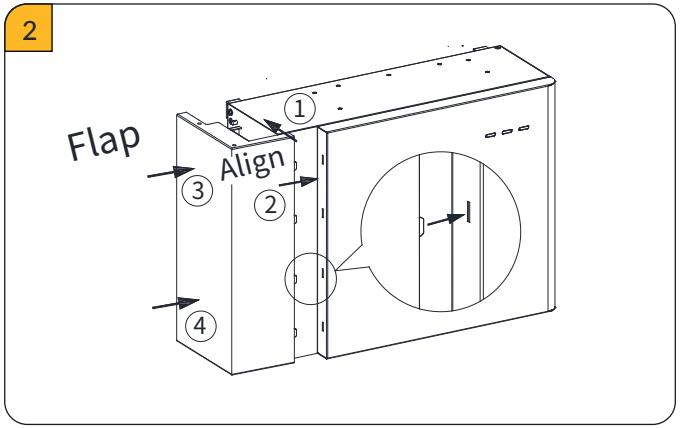

Disassemble the Cable Cover

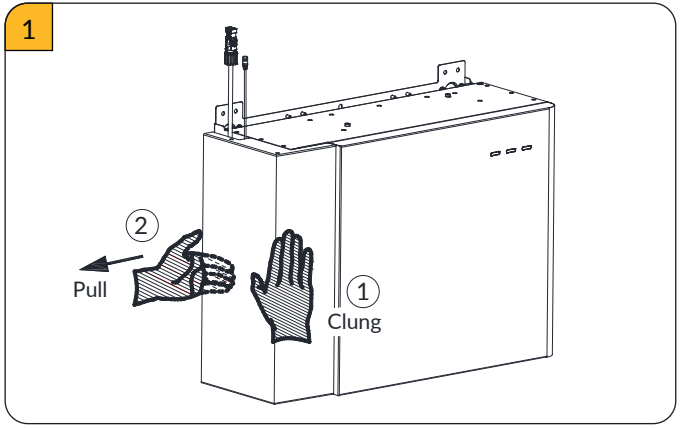

7. Technical Data

SMILE-G3-BAT-3.6S

SMILE-G3-BAT-4.0S



@AlphaEnergyStorageSystem @AlphaESS @alpha_ess @AlphaESS www.alphaess.com

Alpha ESS Co., Ltd.
☎ +86 513 8060 6891
✉ info@alpha-ess.com
e www.alphaess.com
⌂ No. 1086 Bihua Road, Tongzhou District, Nantong City, Jiangsu Province, China

Alpha ESS Australia Pty. Ltd.
☎ +61 02 9000 7676
✉ techsupport@alphaess.au
e www.alphaess.au
⌂ 8/15-21 Gibbes Street, Chatswood, NSW 2067 Australia

Alpha ESS NZ Ltd.
☎ +64 0800 769 377
✉ info@alpha-ess.com
e www.alpha-ess.co.nz
⌂ 19 Arrenway Drive, Albany, 0630, New Zealand

Alpha ESS Korea Co., Ltd
✉ info@alpha-ess.com
⌂ 2F, 19-4, Nohyeong 11-gil, Jeju-si, Jeju-do, Republic of Korea

Alpha ESS International Pte. Ltd.
☎ +65 6513 1125 / +65 6513 1126
✉ Singapore@alpha-ess.com
⌂ 2 Corporation Road #01-06A Corporation Place 618494 Singapore

Alpha ESS UK Co., Ltd
☎ +44 330 043 2610
✉ info@alpha-ess.com
⌂ Drake house, Long street, Dursley, gl11 4hh UK

Alpha ESS USA, Inc.
☎ +1 800 220 0725 (Service Inquiries)
✉ service@alphaess.us
e www.alphaess.us
⌂ Unit 5, 2180 S Ivanhoe St, Denver, CO 80222 USA

Alpha ESS Japan, Inc.
✉ info@alpha-ess.com
e www.alphaess.jp

Alpha ESS Europe GmbH
☎ +49 610 3459 1601
✉ europe@alpha-ess.de
e www.alphaess.de
⌂ Paul-Ehrlich-Straße 1a, Langen, Hessen D-63225 Germany

Alpha ESS Italy S.r.l.
☎ +39 339 462 4288
✉ info@alpha-ess.it
e www.alphaess.it
⌂ Via Don Minzoni, 17, Calenzano Firenze 50041 Italy

Alpha ESS South Africa (Pty.) Ltd.
☎ +27 010 745 5653
✉ measervice@alpha-ess.com
⌂ Johannesburg, South Africa