@AlphaEnergyStorageSystem @AlphaESS @alpha_ess @AlphaESS

**Alpha ESS Co., Ltd.**
+86 513 806 068 91
info@alpha-ess.com
www.alpha-ess.com
JiuHua Road 888, High-Tech Industrial Development Zone 226300 Nantong City, Jiangsu Province

**Alpha ESS Suzhou Co., Ltd.**
+86 512 6828 7609
info@alpha-ess.com
www.alpha-ess.com
Building 10-A, Canal Town Industrial Park, 99 Taihu E Rd, Wuzhong District, Suzhou 215000

**Alpha ESS Europe GmbH**
+49 610 3459 1601
europe@alpha-ess.de
www.alpha-ess.de
Paul-Ehrlich-Straße 1a 63225 Langen

**Alpha ESS Italy S.r.l.**
+39 599 239 50
info@alpha-ess.it
www.alpha-ess.it
Via Loda,17-41013 Castelfranco Emilia(MO)

**Alpha ESS Australia Pty. Ltd.**
+61 1300 968 933
australia@alpha-ess.com
www.alpha-ess.com.au
Unit 1, 2 Ralph Street Alexandria NSW 2015

**Alpha ESS Korea Co., Ltd**
+82 64 721 2004
korea@alpha-ess.com
2F, 19-4, Nohyeong 11-gil, Jeju-si, Jeju-do, Republic of Korea

**Alpha ESS UK Co., Ltd**
uk@alpha-ess.com
Drake House, Long Street, Dursley, gl11 4hh

**ALPHA ESS International Pte. Ltd**
Singapore@alpha-ess.com
Blk 55 Ayer Rajah Crescent #01-01, Singapore 139949

Alpha·ESS
your smart energy

V01

# INSTALLATION MANUAL

## DTSU666-3*230V 5A (WITHOUT CT)



**NOTICE**
It is recommended to use a shielded network cable.
· If the extra PV inverters are not used, the mete r is suitable for DC mode.
· If the extra PV inverters are used, the meter  is suitable for AC or Hybrid mode.

## 01 Specification

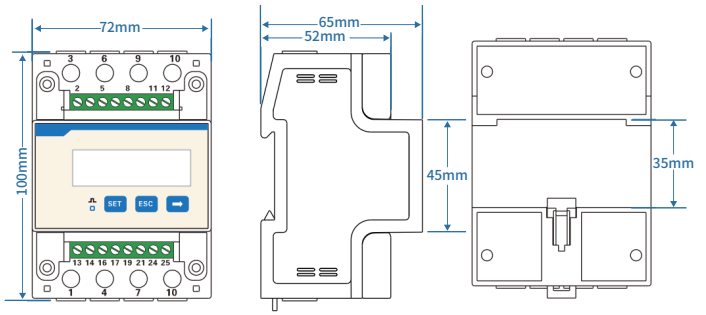


**Figure 1  The dimension  of DTSU666**

| | |
|---|---|
| Category | DTSU666-3*230V 5A |
| Nominal Voltage | 230V AC/400V AC |
| Current Range | 0-80A |
| Grid Type | 3P4W/3P3W |

## 02 Meter Wiring

### 2.1 Meter Wiring for Three Phase Inverter

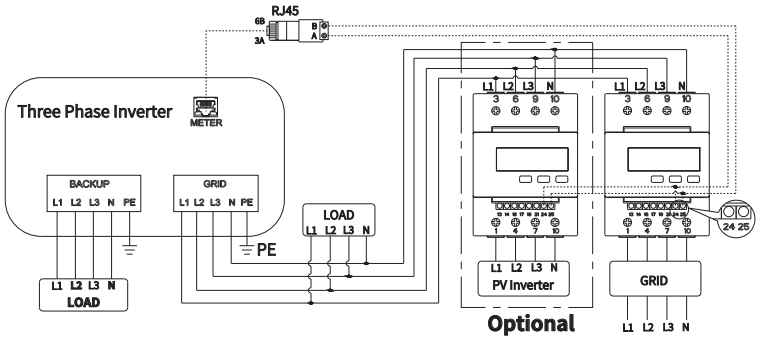


Figure 2 Wiring for Three Phase Inverter

### 2.2 Meter Wiring for Single Phase Inverter

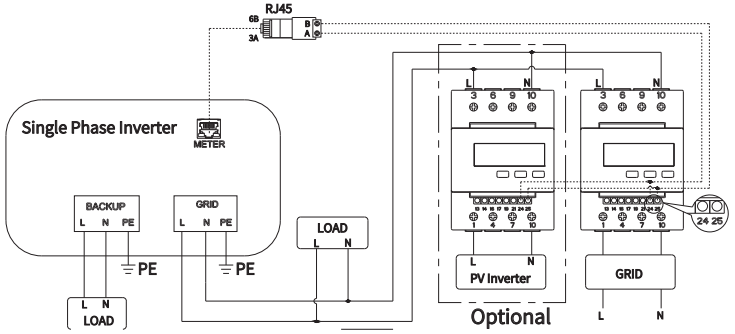


Figure 3 Wiring for single phase inverter at single-phase home

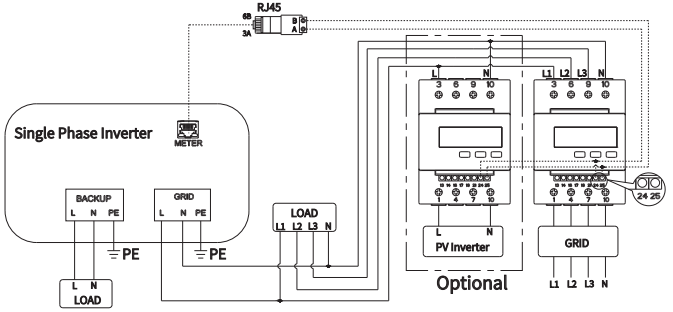


Figure 4 Wiring for single phase inverter at three-phase home



## 03 Address Setting

| Model | Grid Meter Address | PV Meter Address |
|---|---|---|
| DTSU666-3*230V 5A (without CT) | 1 | 2 |

Please follow the steps below to complete the address setting when DTSU666-3*230V 5A (without CT) is used as a grid meter.

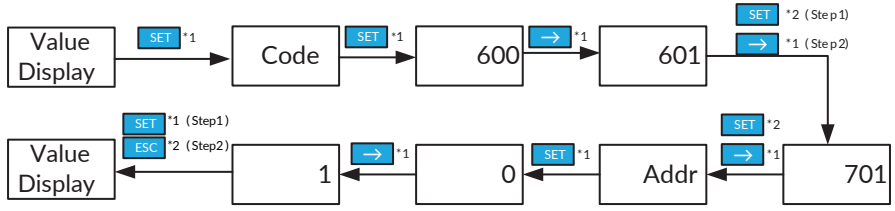


Please follow the steps below to complete the address setting when DTSU666-3*230V 5A (without CT) is used as a PV meter.

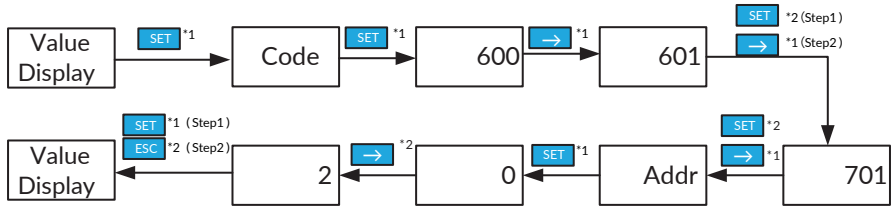

## 04 Meter Setting on AlphaCloud

**Step 1:**

When the system mode is selected as DC, only click the button under the “Grid Meter” .
When the system mode is selected as AC or Hybrid, click the buttons under the “Grid Meter” and “PV side meter” .

**Step 2:**

Click "Save" and wait for a few minutes to refresh the page.
When the “Meter Model” displays DTSU666-3*230V5A, the setting is successful.

**NOTE:**
It is forbidden to tick CT to modify the magnification.

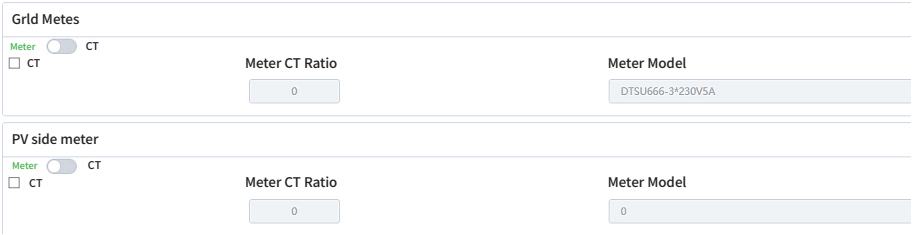


Figure 5 Meter Setting on AlphaCloud



## 05 Meter Setting on APP

**Step 1:**

When the system mode is selected as DC, only tick "Meter" on the right of the “Grid Meter” .
When the system mode is selected as AC or Hybrid, tick "Meter" on the right of the “Grid Meter” and “PV side meter” .

**Step 2:**

Click "Submit" and enter the “System information” page to check the meter model. The setting is successful if meter model is DTSU666-3*230V5A.

**NOTE:**
It is forbidden to tick CT to modify the magnification.

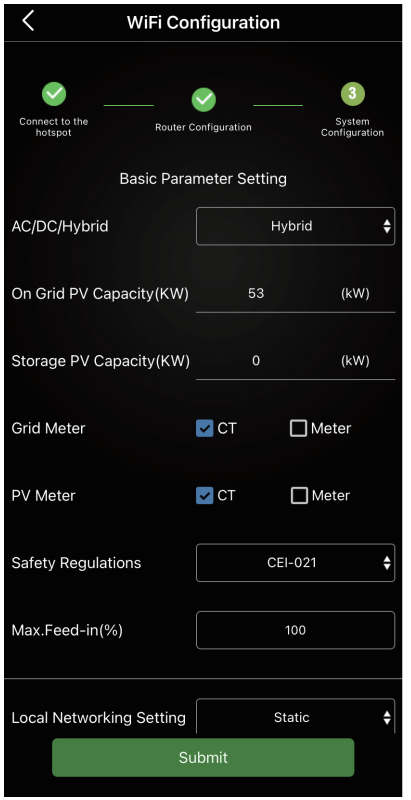


Figure 6 Meter Setting on APP