Alpha·ESS
your smart energy

V02

ACR10R Meter Wiring, Configuration and Settings

CONTENT

CONTENT 1

1. Single-phase System Meter Wiring 2

1.1. Single-phase in house 2

1.1.1. DC-coupled system 2

1.1.2. AC-or Hybrid-coupled system 3

1.1.3. WRONG WIRINGS 4

1.2. Three-phase in house 6

1.2.1. DC-coupled system with single-phase energy storage inverter 6

1.2.2. AC-or Hybrid-coupled system with single-phase energy storage inverter 7

1.2.3. DC-coupled system with three-phase energy storage inverter 8

1.2.4. AC-or Hybrid-coupled system with three-phase energy storage inverter 9

1.2.5. WRONG WIRINGS 10

2. Meter Configuration 12

3. Meter Settings on AlphaCloud or AlphaAPP 14

3.1. AlphaCloud Setting 14

3.2. AlphaAPP Settings 15

1. Single-phase System Meter Wiring

1.1. Single-phase in house

1.1.1. DC-coupled system

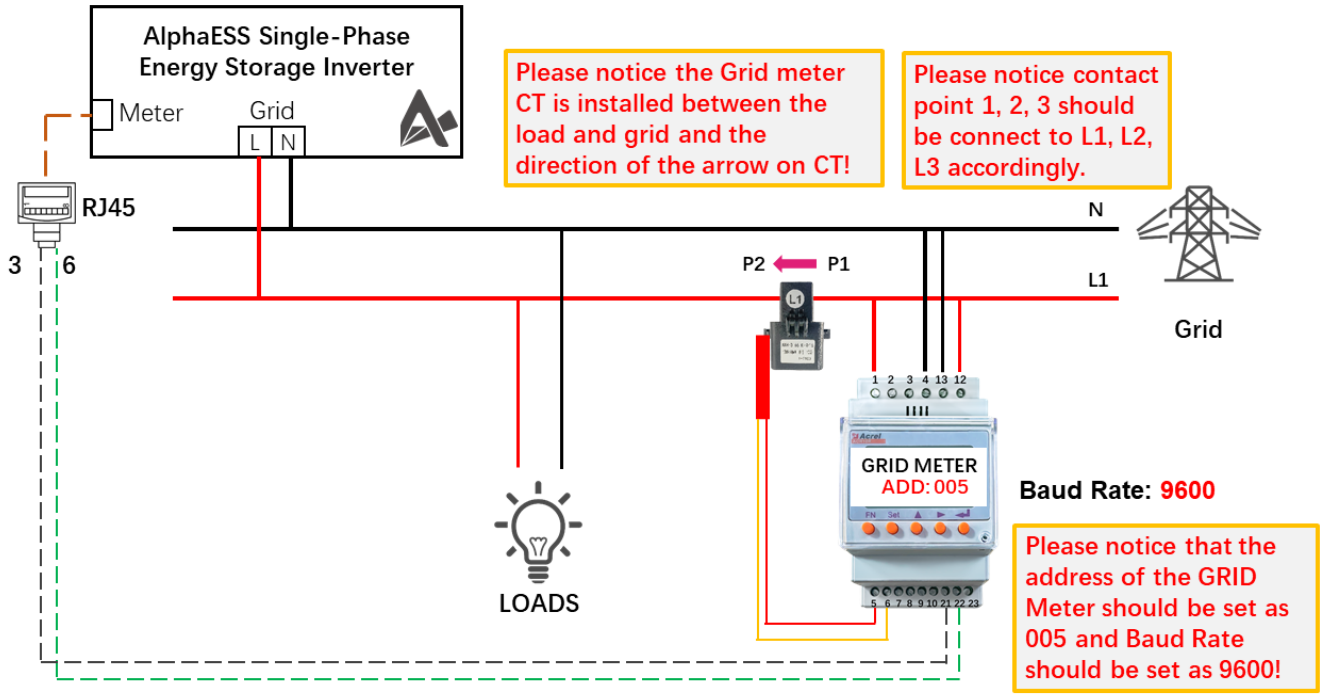

For the communication of meter, please use Pin 3 (G/W) & PIN6 (G) of RJ45 cable to connect to the contact point 21 and 22 of the meter.

NOTE: If the communication cables are not connected correctly, the system cannot run normally.

If a CT meter/CT meters (in this case of ACR10R-120A CT meter) is/are installed, please set the CT ratio as 120 on AlphaCloud or AlphaAPP, see Section 3 Meter Settings on AlphaCloud or AlphaAPP.

NOTE: 1. If you have installed CT with 200A, please set the CT ratio as 200.

2. If the CT ratio is not set correctly, the energy value will be wrong.

Please also configure the Grid Meter address as 005 and the baud rate as 9600, see Section 2 Meter Configuration.

NOTE: If the address and baud rate of meter are not set correctly, the system cannot run normally.

1.1.2. AC-or Hybrid-coupled system

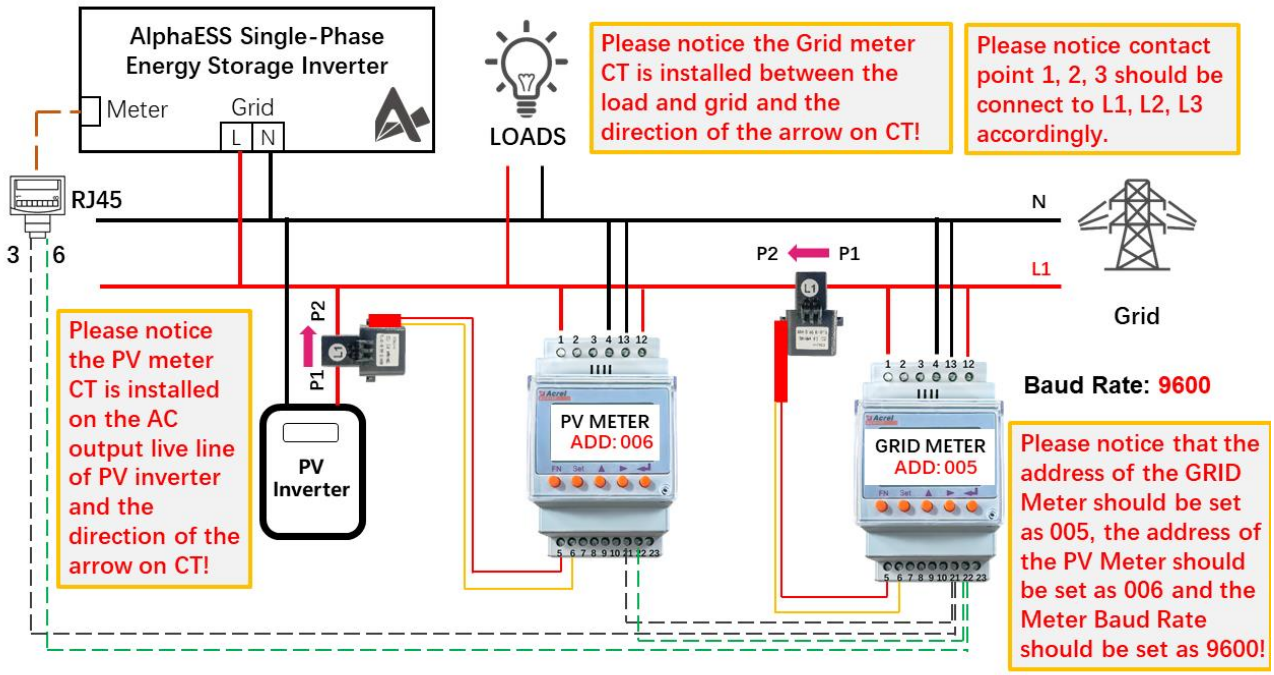

For the communication of meter, please use Pin 3 (G/W) & PIN6 (G) of RJ45 cable to connect to the contact points 21 and 22 of both meters.

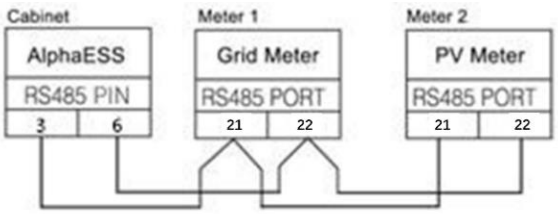

NOTE: If the communication cables are not connected correctly, the system cannot run normally.

If a CT meter/CT meters (in this case of ACR10R-120A CT meter) is/are installed, please set the CT ratio as 120 on AlphaCloud or AlphaAPP, see Section 3 Meter Settings on AlphaCloud or AlphaAPP.

NOTE: 1. If you have installed CT with 200A, please set the CT ratio as 200.

2. If the CT ratio is not set correctly, the energy value will be wrong.

Please also configure the Grid Meter address as 005, PV Meter address as 006 and the both baud rates as 9600, see Section 2 Meter Configuration.

NOTE: If the address and baud rate of meter are not set correctly, the system cannot run normally.

1.1.3. WRONG WIRINGS

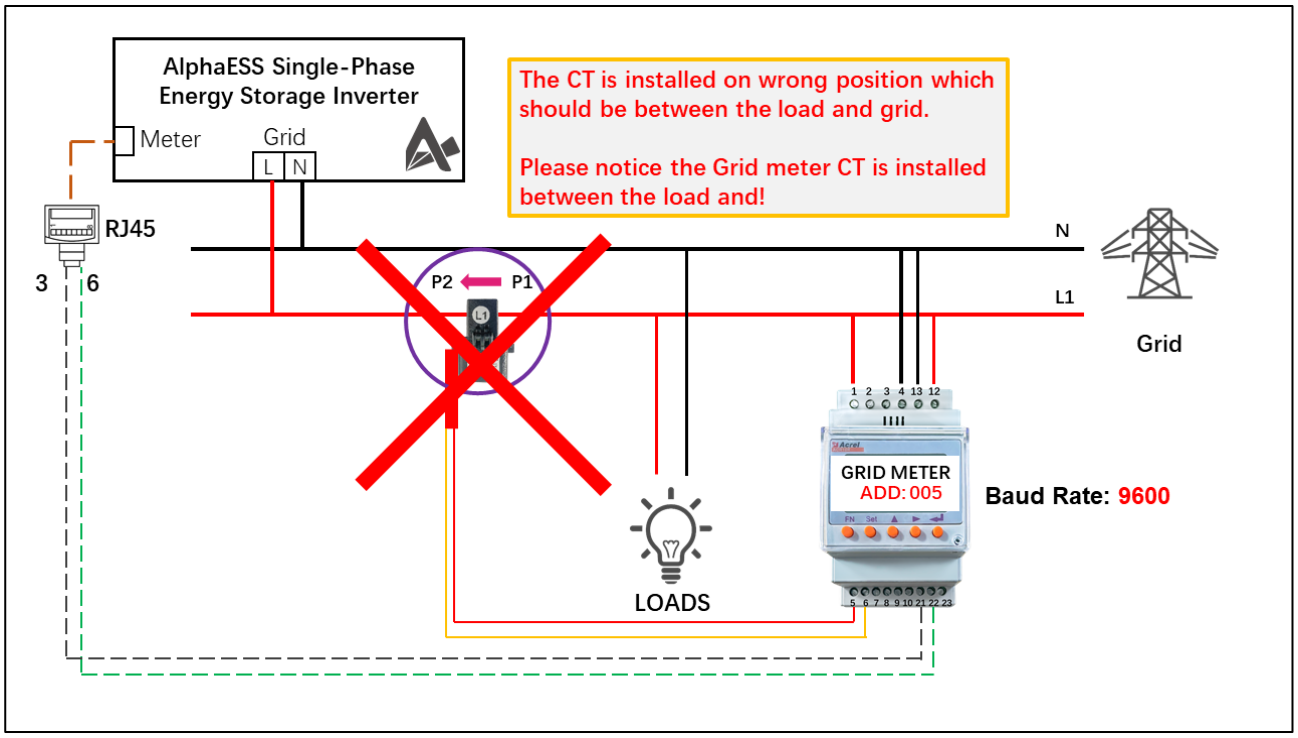

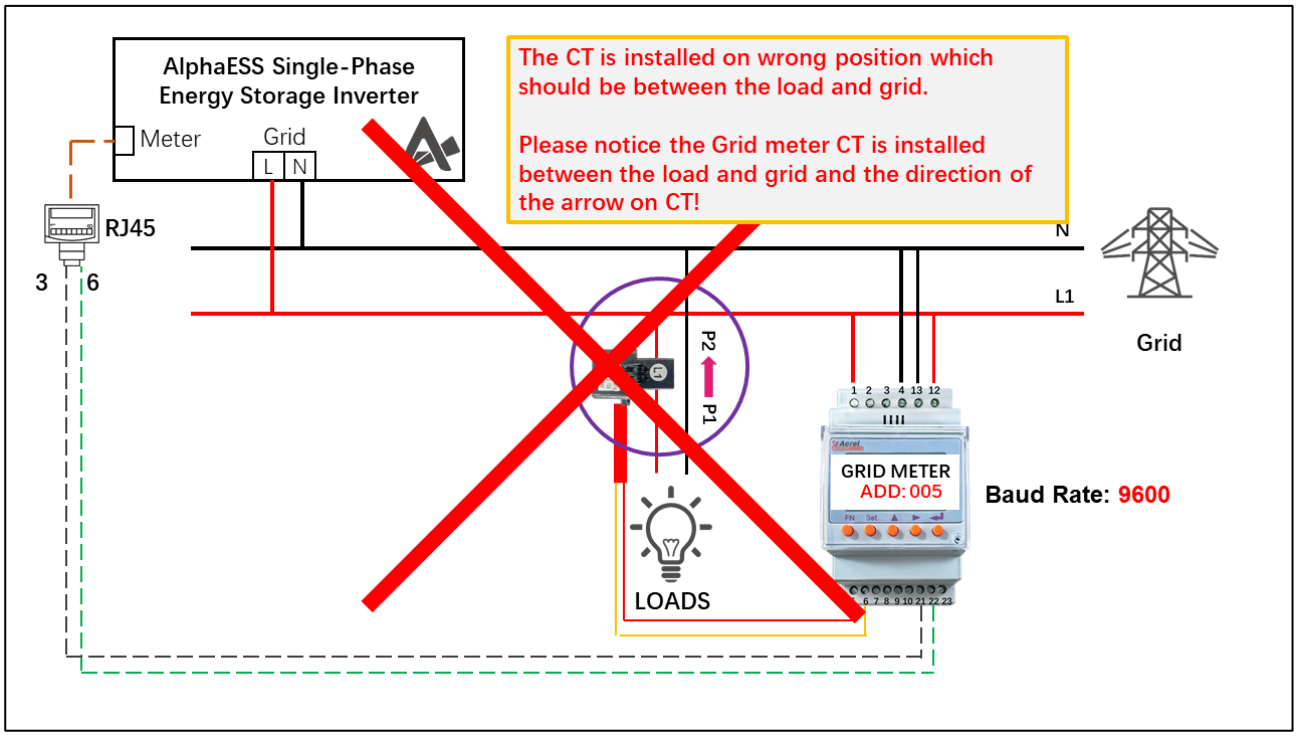

Single-phase System Meter Wiring

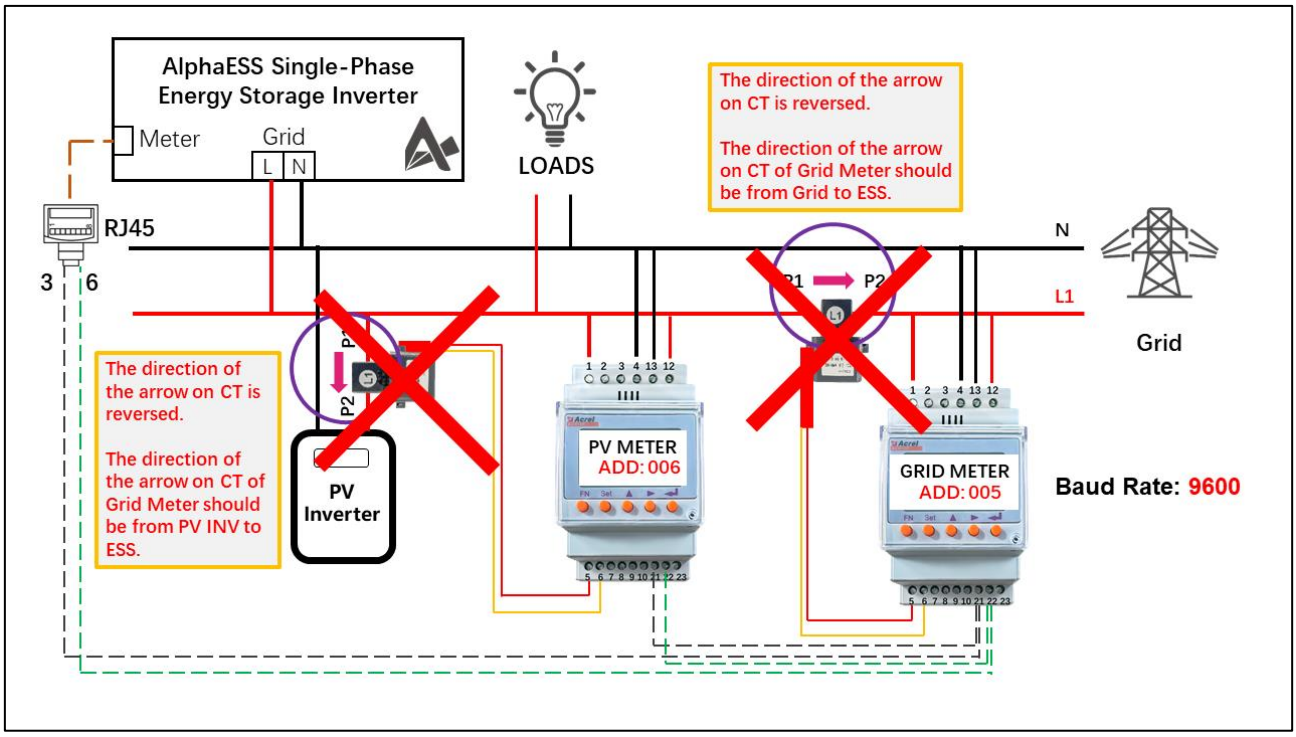

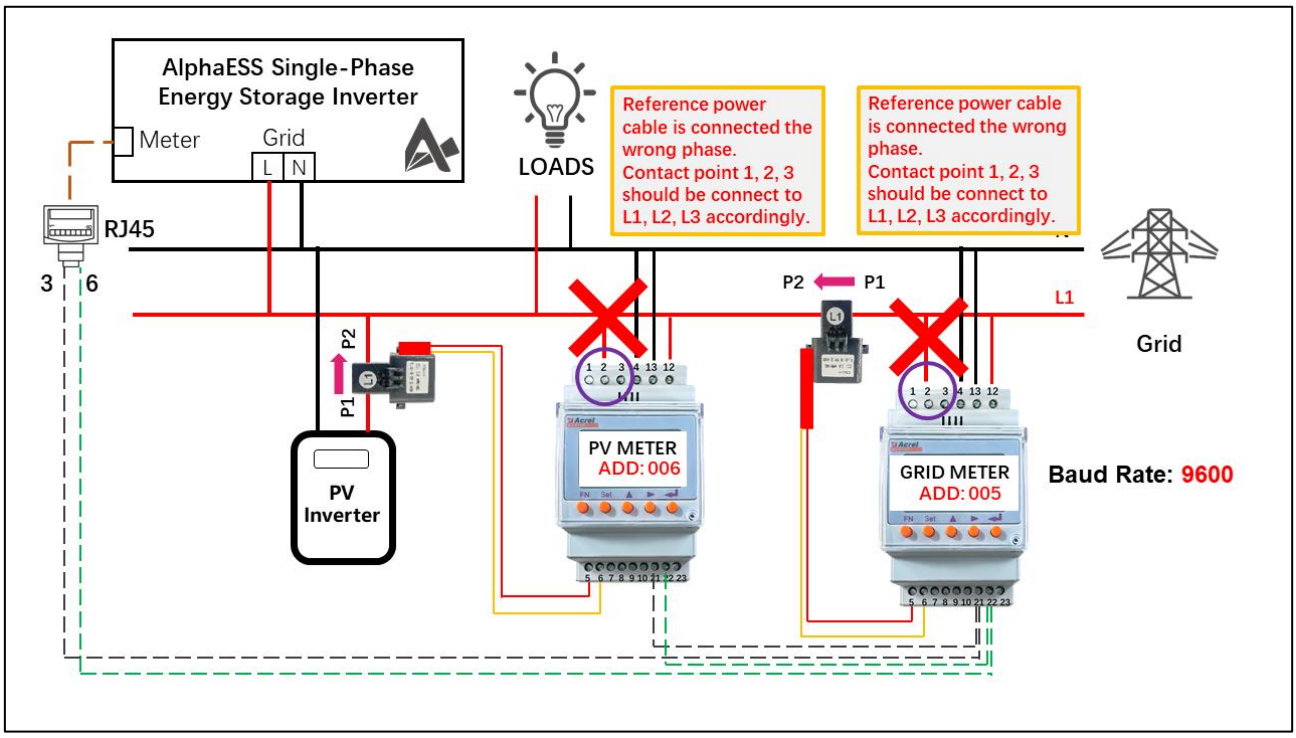

1.2. Three-phase in house

1.2.1. DC-coupled system with single-phase energy storage inverter

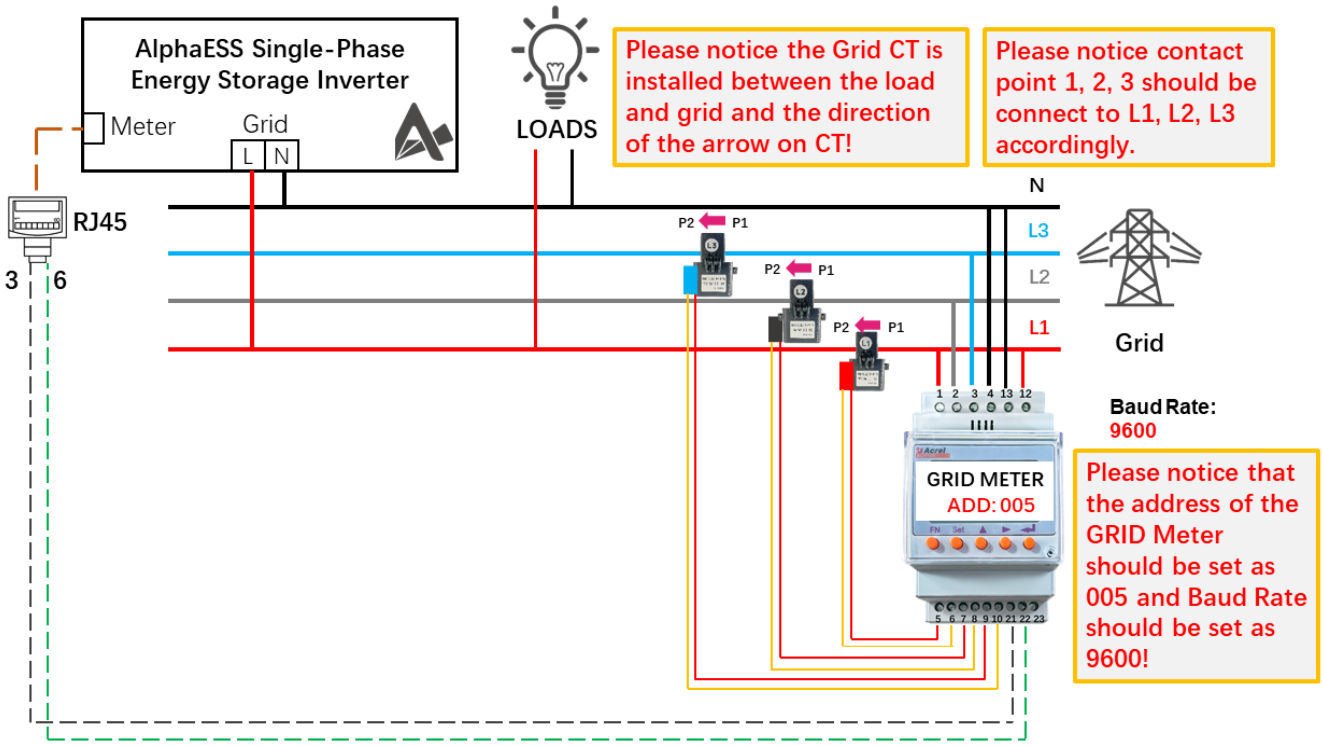

For the communication of meter, please use Pin 3 (G/W) & PIN6 (G) of RJ45 cable to connect to the contact point 21 and 22 of the meter.

NOTE: If the communication cables are not connected correctly, the system cannot run normally.

If a CT meter/CT meters (in this case of ACR10R-120A CT meter) is/are installed, please set the CT ratio as 120 on AlphaCloud or AlphaAPP, see Section 3 Meter Settings on AlphaCloud or AlphaAPP.

NOTE: 1. If you have installed CT with 200A, please set the CT ratio as 200.

2. If the CT ratio is not set correctly, the energy value will be wrong.

Please also configure the Grid Meter address as 005 and the baud rate as 9600, see Section 2 Meter Configuration.

NOTE: If the address and baud rate of meter are not set correctly, the system cannot run normally.

1.2.2. AC-or Hybrid-coupled system with single-phase energy storage inverter

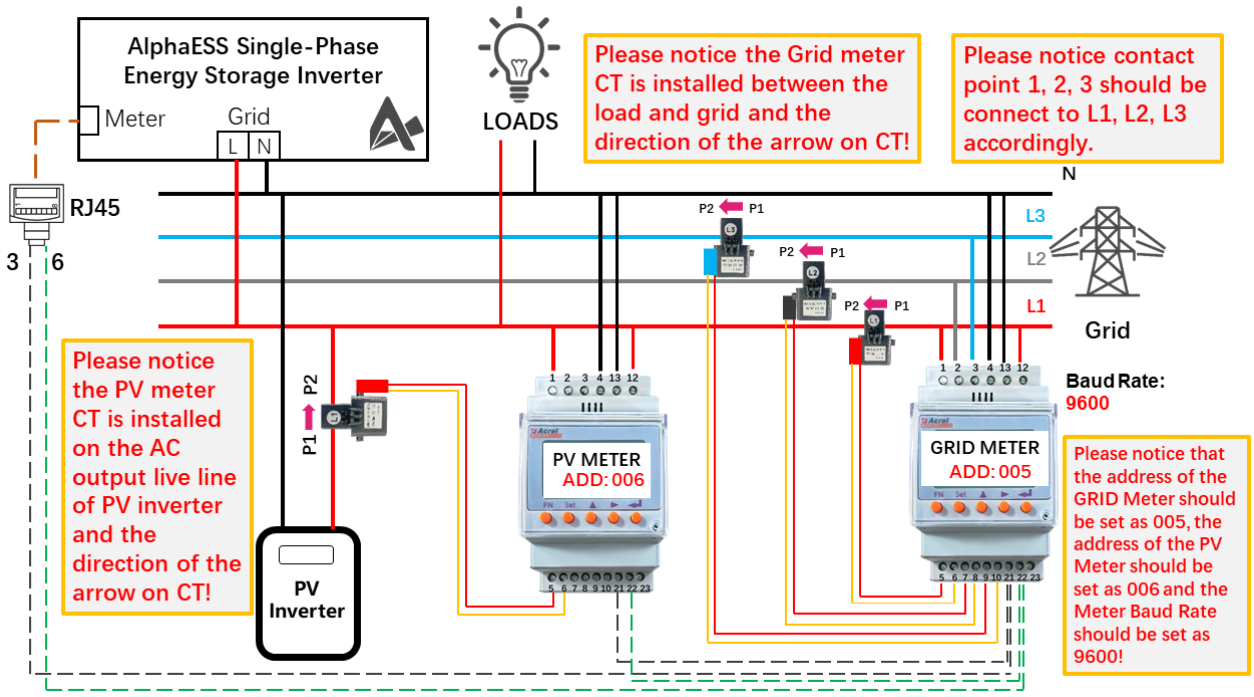

For the communication of meter, please use Pin 3 (G/W) & PIN6 (G) of RJ45 cable to connect to the contact points 21 and 22 of both meters.

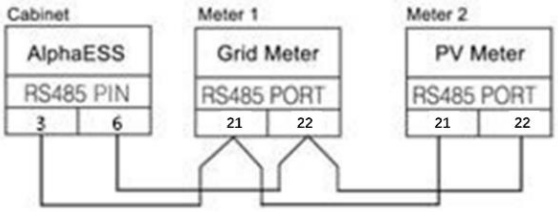

NOTE: If the communication cables are not connected correctly, the system cannot run normally.

If a CT meter/CT meters (in this case of ACR10R-120A CT meter) is/are installed, please set the CT ratio as 120 on AlphaCloud or AlphaAPP, see Section 3 Meter Settings on AlphaCloud or AlphaAPP.

NOTE: 1. If you have installed CT with 200A, please set the CT ratio as 200.

2. If the CT ratio is not set correctly, the energy value will be wrong.

Please also configure the Grid Meter address as 005, PV Meter address as 006 and the both baud rates as 9600, see Section 2 Meter Configuration.

NOTE: If the address and baud rate of meter are not set correctly, the system cannot run normally.

1.2.3. DC-coupled system with three-phase energy storage inverter

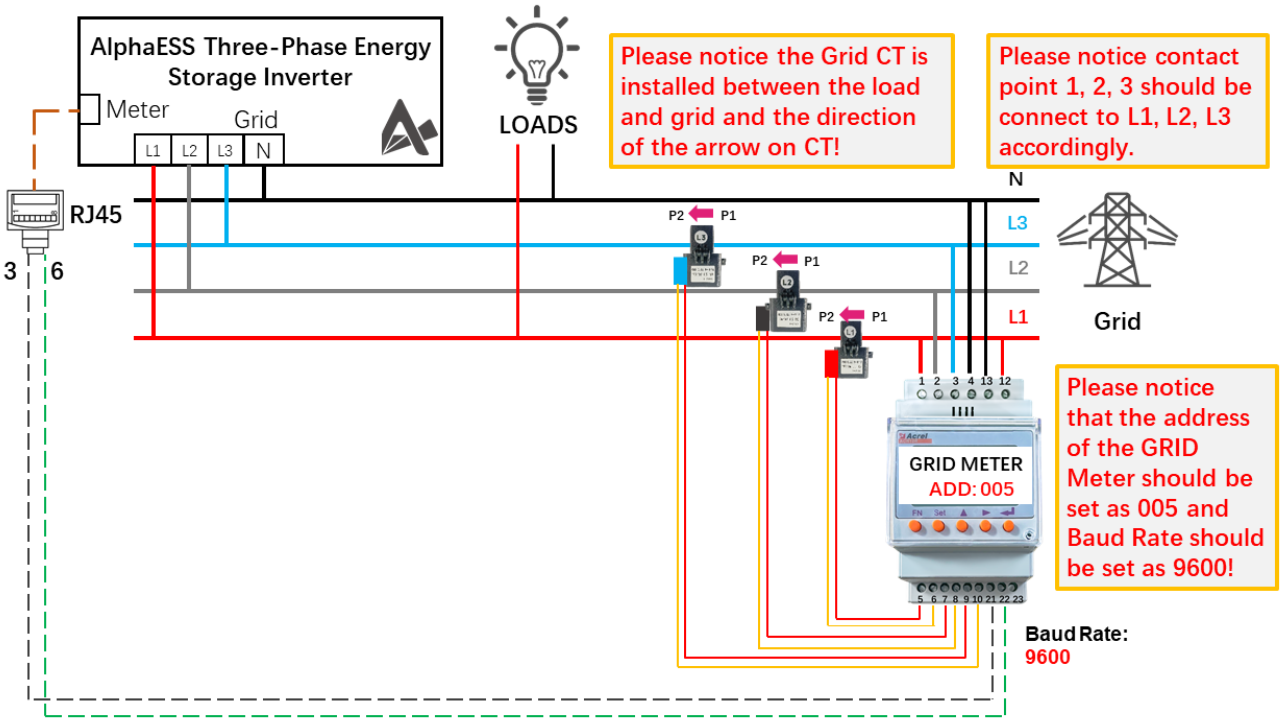

For the communication of meter, please use Pin 3 (G/W) & PIN6 (G) of RJ45 cable to connect to the contact point 21 and 22 of the meter.

NOTE: If the communication cables are not connected correctly, the system cannot run normally.

If a CT meter/CT meters (in this case of ACR10R-120A CT meter) is/are installed, please set the CT ratio as 120 on AlphaCloud or AlphaAPP, see Section 3 Meter Settings on AlphaCloud or AlphaAPP.

NOTE: 1. If you have installed CT with 200A, please set the CT ratio as 200.

2. If the CT ratio is not set correctly, the energy value will be wrong.

Please also configure the Grid Meter address as 005 and the baud rate as 9600, see Section 2 Meter Configuration.

NOTE: If the address and baud rate of meter are not set correctly, the system cannot run normally.

1.2.4. AC-or Hybrid-coupled system with three-phase energy storage inverter

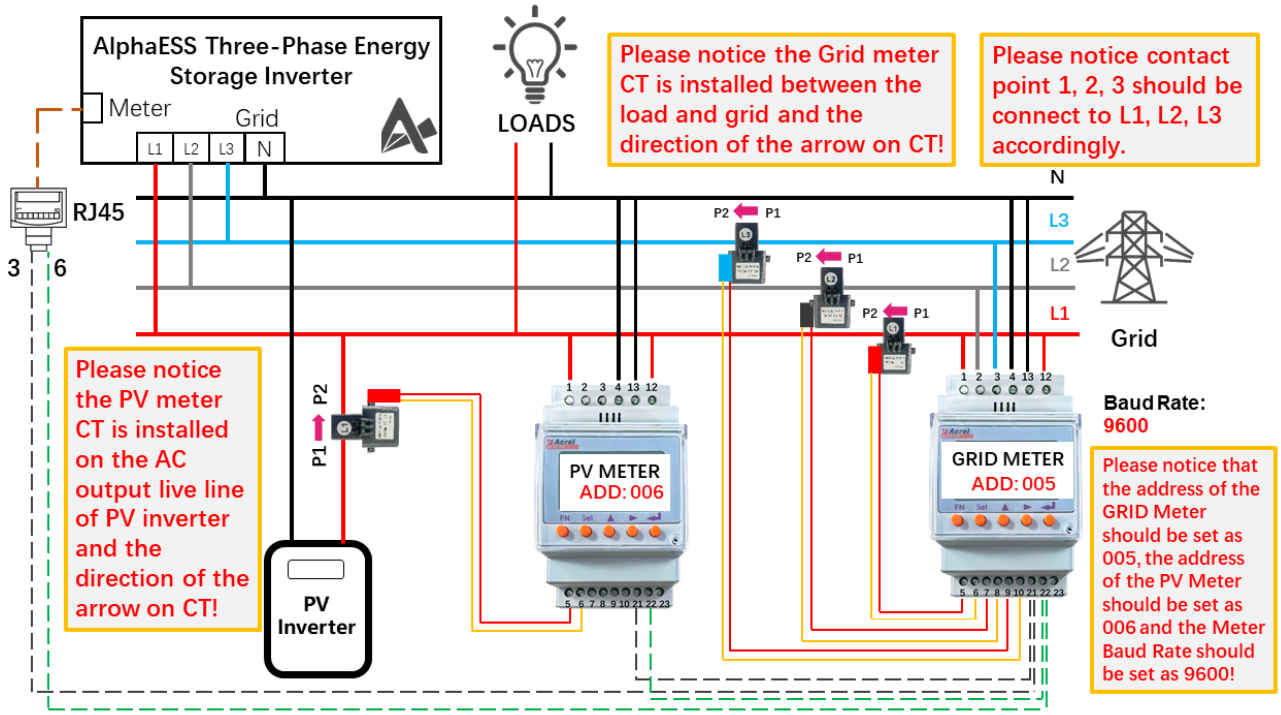

For the communication of meter, please use Pin 3 (G/W) & PIN6 (G) of RJ45 cable to connect to the contact points 21 and 22 of both meters.

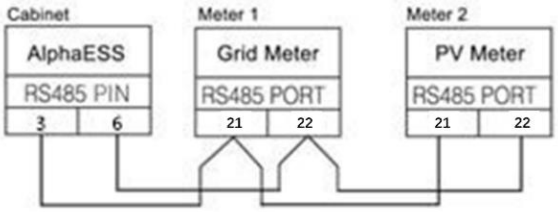

NOTE: If the communication cables are not connected correctly, the system cannot run normally.

If a CT meter/CT meters (in this case of ACR10R-120A CT meter) is/are installed, please set the CT ratio as 120 on AlphaCloud or AlphaAPP, see Section 3 Meter Settings on AlphaCloud or AlphaAPP.

NOTE: 1. If you have installed CT with 200A, please set the CT ratio as 200.

2. If the CT ratio is not set correctly, the energy value will be wrong.

Please also configure the Grid Meter address as 005, PV Meter address as 006 and the both baud rates as 9600, see Section 2 Meter Configuration.

NOTE: If the address and baud rate of meter are not set correctly, the system cannot run normally.

1.2.5. WRONG WIRINGS

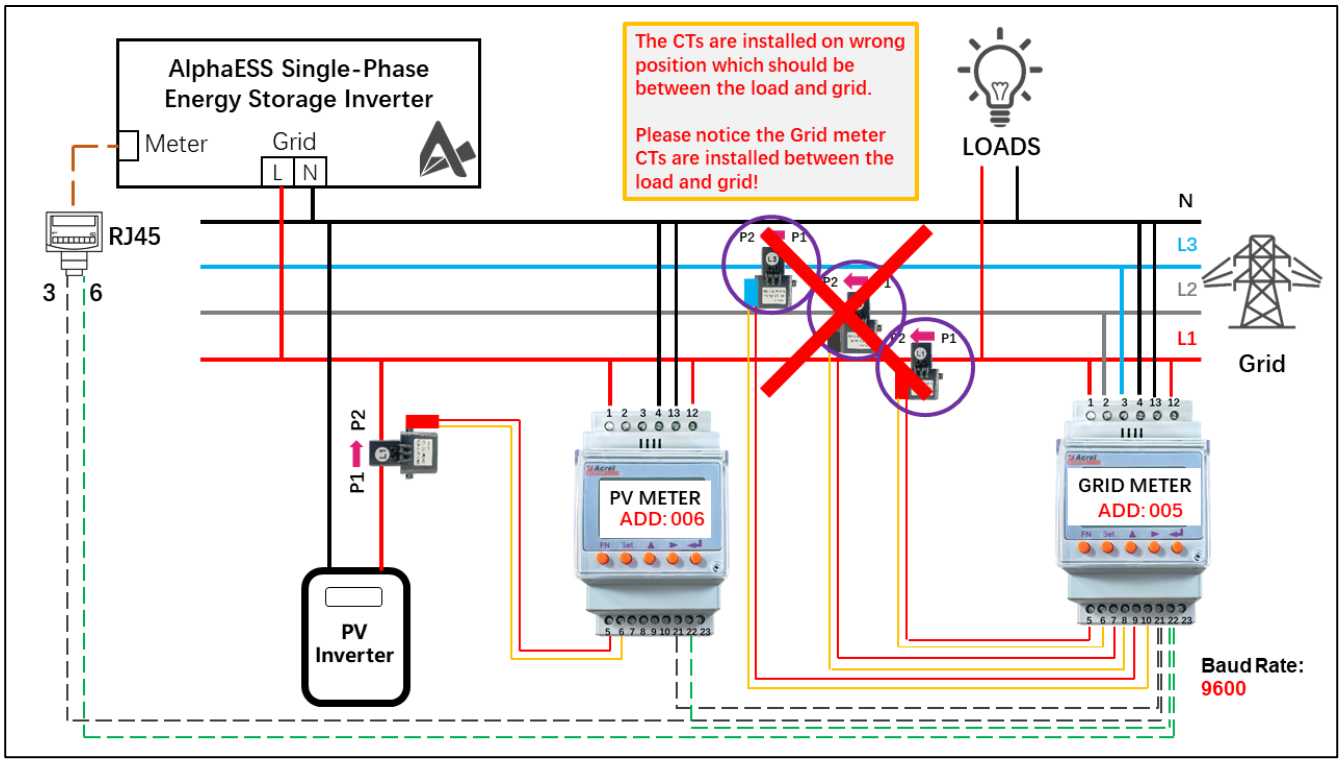

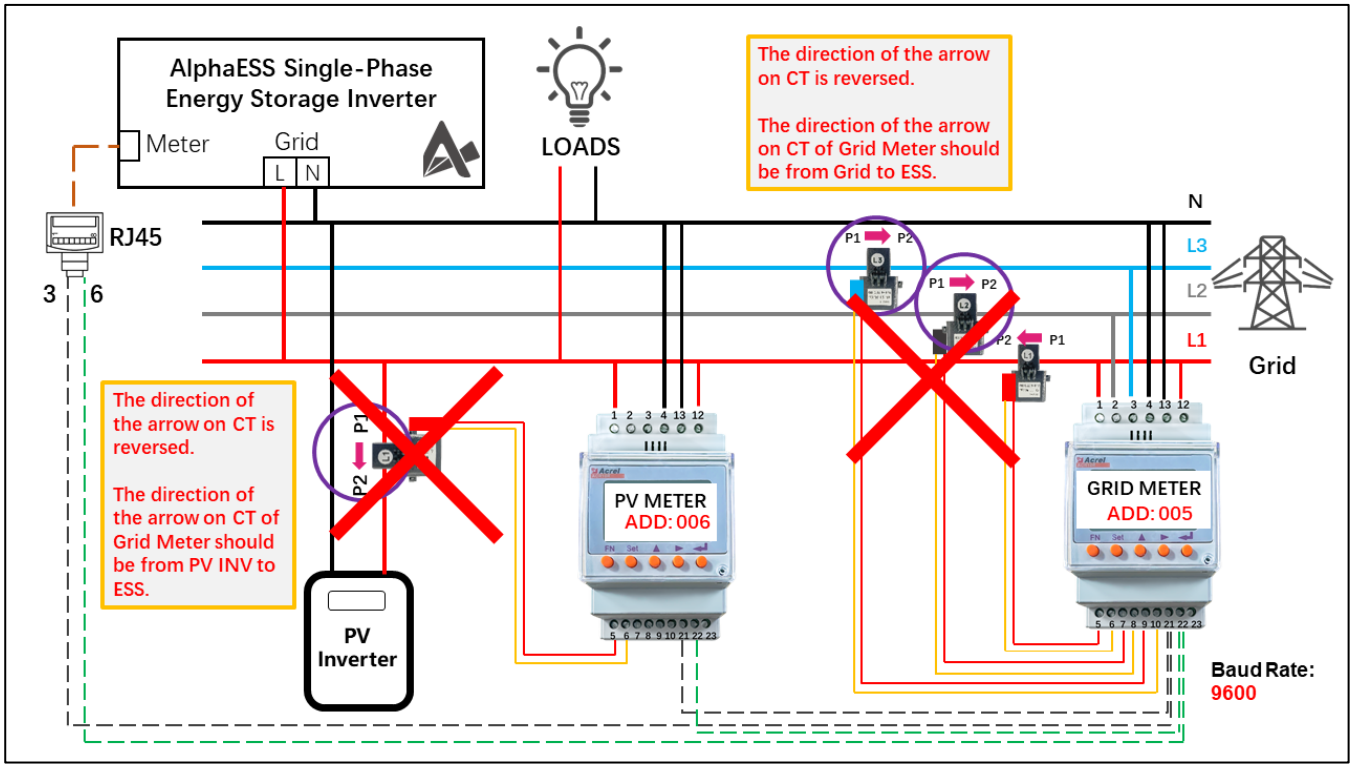

Single-phase System Meter Wiring

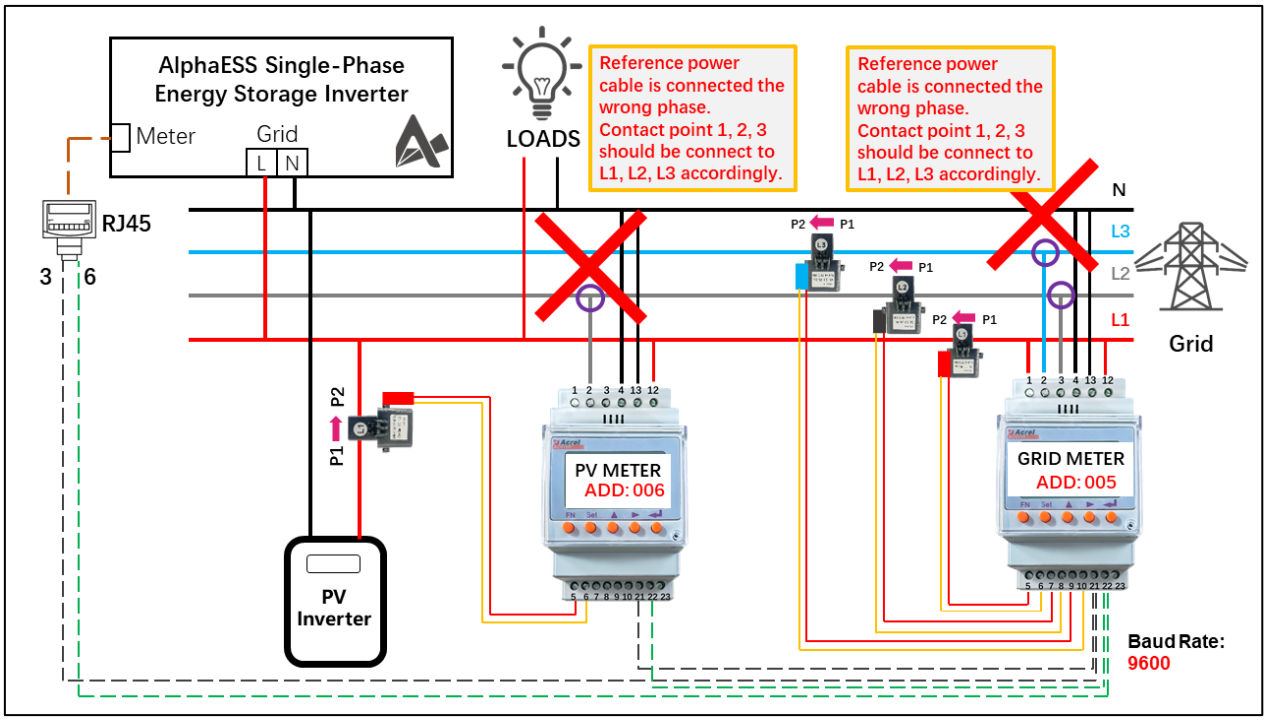

2. Meter Configuration

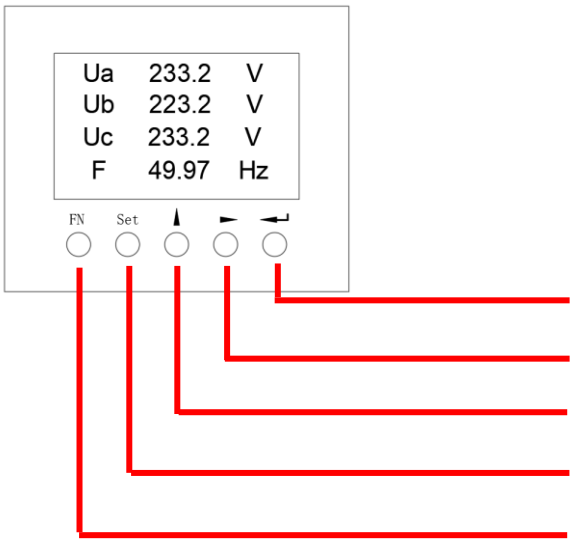

There are 5 buttons on the meter's front:

1. Enter key
2. Arrow to the right
3. Up arrow
4. SET button
5. FN key (no function)

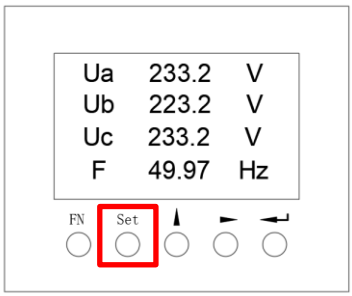

Step 1: Activate the meter display by pressing any key. Then click the "Set" button.

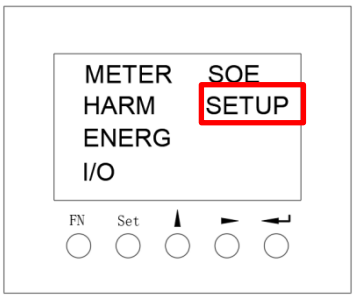

Step 2: Use the arrow keys to select the "SETUP" menu item and confirm your selection with the Enter key.

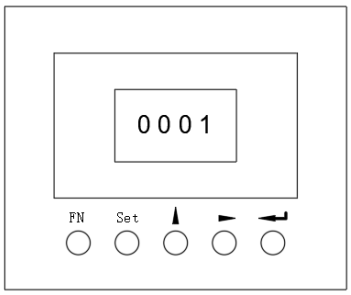

Step 3: Enter the password "0001" and confirm the entry by pressing the Enter key.

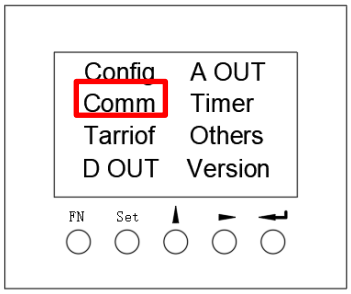

Step 4: Select the menu item "Comm" in the settings menu to change to the communication settings.

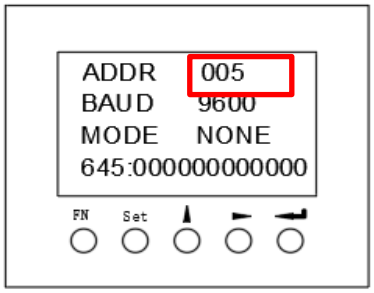

Step 5: Set the communication address and communication baud rate in the communication setting interface. When the meter is used as Grid meter (DC, AC/Hybrid system), the address is set to "005". When it is used as the PV meter (AC/Hybrid system), the address is set to "006". The baud rate is set to 9600.

3. Meter Settings on AlphaCloud or AlphaAPP

Please set the meter configuration on AlphaCloud or AlphaAPP

3.1. AlphaCloud Setting

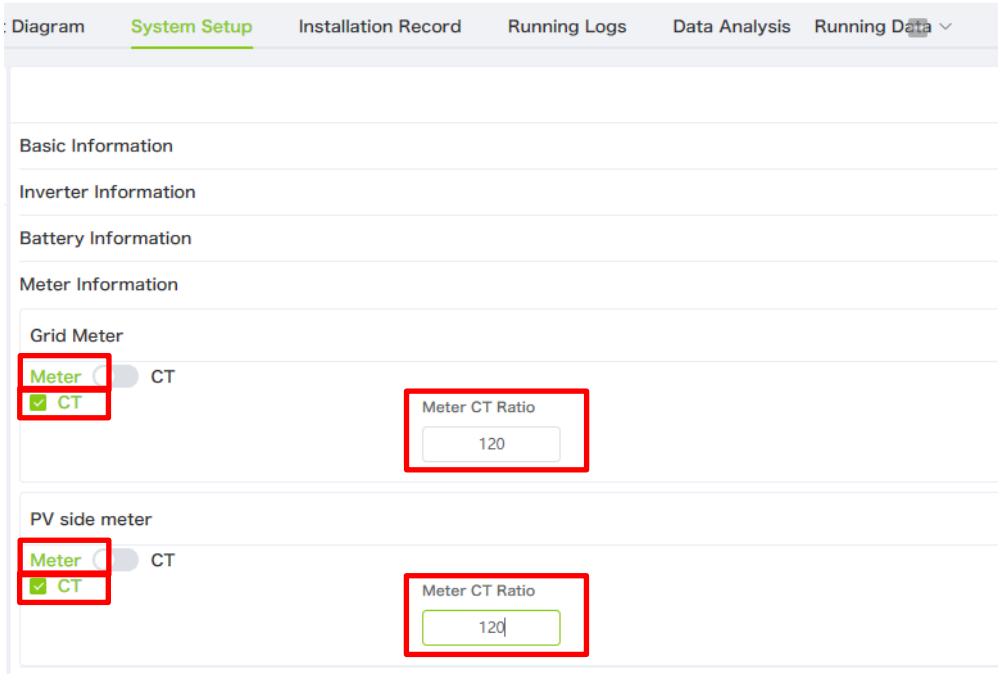

Please select the meter information in sub-menu and set the meter configuration. Choose the meter type used and, if necessary, set the CT ratio for the grid meter and PV meter individually.

After that you must specify whether you have installed a CT or an electricity meter (ADL3000 or ACR10R) and in the case of electricity meters, please further select if the meter with or without CT were connected.

1. If a single CT is installed, please directly select "CT"

2. If a meter is installed, please select the item "meter"

a) If a CT meter/CT meters (in this case of ACR10R-120A CT meter) is/are installed, please select the second point "CT" and set the CT ratio as 120.

3. Then save the settings."

Note: If you have installed CT with 200A, please set the CT ratio as 200..

3.2. AlphaAPP Settings

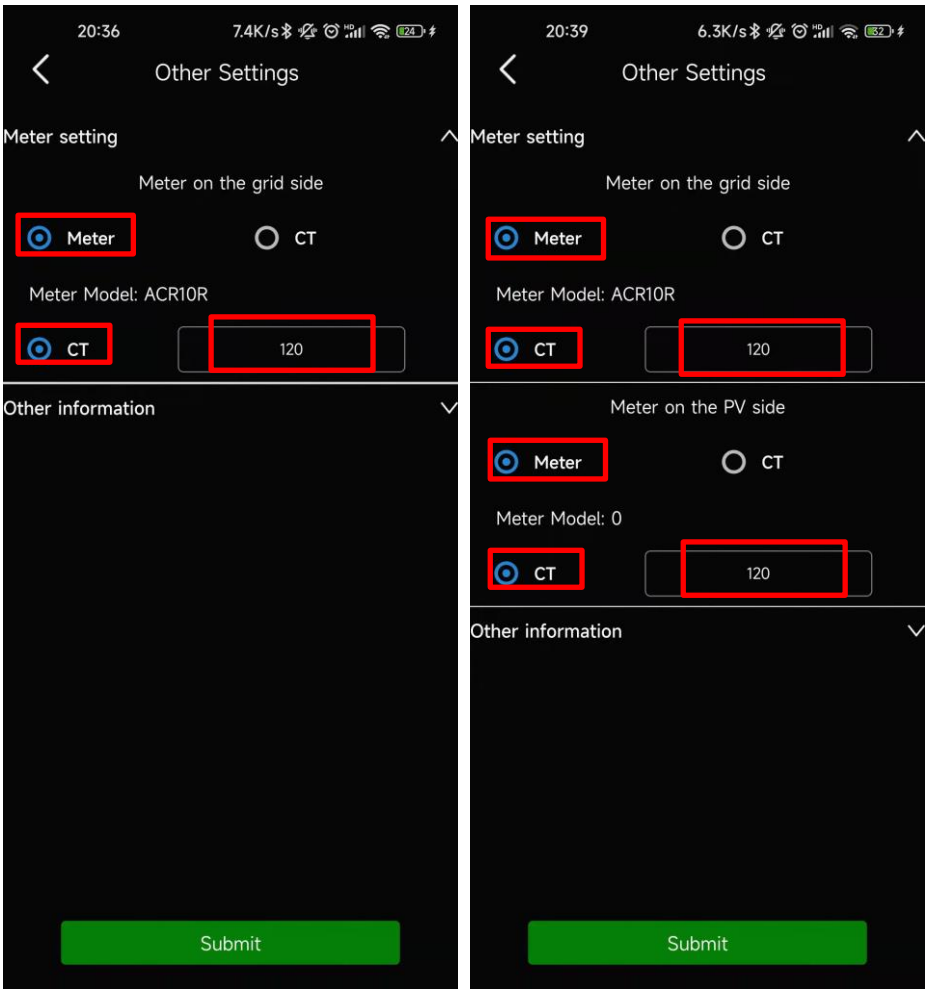

Please select the meter information on the related page on APP and set the meter configuration. Choose the meter type used and, if necessary, set the CT ratio for the grid meter and PV meter individually.

After that you must specify whether you have installed a CT or an electricity meter (ADL3000 or ACR10R) and in the case of electricity meters, please further select if the meter with or without CT were connected.

1. If a single CT is installed, please directly select "CT"

2. If a meter is installed, please select the item "meter"

a) If a CT meter/CT meters (in this case of ACR10R-120A CT meter) is/are installed, please select the second point "CT" and set the CT ratio as 120.

3. Then submit the settings.

Note: If you have installed CT with 200A, please set the CT ratio as 200..

@AlphaEnergyStorageSystem @AlphaESS @alpha_ess @AlphaESS www.alpha-ess.com

Alpha ESS Co., Ltd.

☎ +86 513 806 068 91
✉ info@alpha-ess.com
e www.alpha-ess.com
JiuHua Road 888, High-Tech Industrial Development Zone 226300 Nantong City, Jiangsu Province

Alpha ESS Suzhou Co., Ltd.

☎ +86 512 6828 7609
✉ info@alpha-ess.com
e www.alpha-ess.com
Building 10-A, Canal Town Industrial Park, 99 Taihu E Rd, Wuzhong District, Suzhou 21500

Alpha ESS Europe GmbH

☎ +49 610 3459 1601
✉ europe@alpha-ess.de
e www.alpha-ess.de
Paul-Ehrlich-Stra谻 1a 63225 Langen

Alpha ESS Australia Pty. Ltd.

☎ +61 1300 968 933
✉ australia@alpha-ess.com
e www.alpha-ess.com.au
Unit 1, 2 Ralph Street Alexandria NSW 2015

Alpha ESS Italy S.r.l.

☎ +39 599 239 50
✉ info@alpha-ess.it
e www.alpha-ess.it
Via Loda,17-41013 Castelfranco Emilia(MO)

Alpha ESS Korea Co., Ltd

☎ +82 64 721 2004
✉ korea@alpha-ess.com
2F, 19-4, Nohyeong 11-gil, Jeju-si, Jeju-do, Republic of Korea

Alpha ESS UK Co., Ltd

✉ uk@alpha-ess.com
Drake House, Long Street, Dursley, gl11 4hh

Alpha ESS International Pte. Ltd.

✉ Singapore@alpha-ess.com
Blk 55 Ayer Rajah Crescent #01-01, Singapore 139949

Alpha ESS USA, Inc

✉ USA@alpha-ess.com
638 S Ahwanee Ter Sunnyvale, California, 94085 United States of America