V01

INSTALLATION & OPERATION& MAINTENANCE MANUAL OF SMILE5 ENERGY STORAGE SYSTEM



DISCLAIMER

Copyright © Alpha ESS Co., Ltd. 2022. All rights reserved.

No part of this document may be reproduced or transmitted in any form or by any means without prior written consent of AlphaESS Co., Ltd.

The material furnished in this document is believed to be accurate and reliable. The information and recommendations in this document do not constitute commitments or warranties in the form of assignments. The information in this document is subject to change without notice. You may refer to the Alpha Cloud Platform https://cloud.alphaess.com) for the most updated version.

All company and brand products and service names are trademarks or registered trademarks of their respective holders.

COPYRIGHT STATEMENT

This manual is under the copyright of Alpha ESS Co., Ltd. with all rights reserved. Please keep the manual properly and operate in strict accordance with all safety and operating instructions in this manual. Please do not operate the product before reading through the manual.

CONTENT

DISCLAIMER 1

COPYRIGHT STATEMENT 2

CONTENT 3

1. INTRODUCTION 7

1.1. Content and Structure of this Document 7

1.2. Target Group 7

1.3. Levels of Warning Messages 8

1.4. Definition of Abbreviations and Nouns 9

2. Safety 10

2.1. Intended Use 10

2.2. Safety Instructions for Battery 11

2.2.1. General Safety Precautions 11

2.2.2. Response to Emergency Situations 11

2.3. Important Safety Instructions 12

2.4. Symbols explanation 16

3. Product Introduction and Application Scenarios 18

3.1. Nomenclature introduction 18

3.2. Product Description 18

3.2.1. Inverter Electrical Interface Introduction 18

3.2.2. Inverter Display Interface Introduction 19

3.2.3. Main interface of the Inverter LCD 20

3.2.4. Battery Introduction 25

3.3. Application Scenarios 28

3.3.1. DC-coupled Storage System 29

3.3.2. AC-coupled Storage System 29

3.3.3. Hybrid-coupled Storage System 30
3.3.4. Off-Grid Storage System 30

4. Storage and Transport 31

4.1. Storage 31

4.1.1. Inverter Storage 31
4.1.2. Battery Storage 31

4.2. Transport 32

5. Mounting 33

5.1. Checking the Outer Packing 33

5.2. Scope of Delivery 33

5.3. Requirements for Mounting 35

5.3.1. Basic Requirements 35
5.3.2. Mounting Environment Requirements 35
5.3.3. Mounting Structure Requirements 36
5.3.4. Mounting Angle and Stack Requirement 36
5.3.5. Mounting Space Requirements 37

5.4. Preparing Tools and Instruments 38

5.5. Mounting the Product 39

5.5.1. Mounting the Battery 39
5.5.2. Mounting the Inverter 44
5.5.3. Mounting the WiFi Module 46

6. Electrical Connection 47

6.1. Cable Requirements for Connection 48

6.2. Connecting Additional Grounding 49

6.3. AC Connection 50

6.3.1. Requirements for the AC Connection 50
6.3.2. Grid and Backup Connection 51

6.4. CT Connection & Electricity Meter Connection 53

6.4.1. CT Connection 53
6.4.2. Chint Meter Connection 55

6.4.3. Configuring the Chint Meter 57
6.4.4. Acrel Meter Connection 60
6.5. PV Connection 72
6.6. Electrical Connection Between the Inverter and Battery Packs 73
6.6.1. Electrical Connection Between the Inverter and SMILE-Bat series 73
6.6.2. Electrical Connection Between the Inverter and M4856-P 74
6.6.3. AUX/LAN/PV-CT/DRM、RRCR/GRID-CT、Meter/RS485/BMS Connection 75
6.7. Mounting the Inverter Cable Cover and Battery Front cover 76
7. Installer Account Register and Install New System 78
7.1. Register on APP 78
7.1.1. Download and Install APP 78
7.1.2. Register as Installer Account 78
7.1.3. Overview of Functions for Installer Account 79
7.1.4. Install New System 80
7.2. Regiter on AlphaCoud 82
7.2.1. Register as Installer Account 82
7.2.2. Install New System 83
8. Powering On and Off the System 85
8.1. Powering on the System 85
8.2. Powering off the System 85
9. COMMISSIONING 86
9.1. Checking Before Power-On 86
9.2. Powering on the System 86
9.3. WiFi Module Configuration and Parameter Settings 87
9.3.1. WiFi Configuration 87
9.3.2. Direct Commissioning on WiFi configuration 92
9.4. Installing New System and Settings on the APP 95
9.4.1. Download and Install the APP 95
9.4.2. Register as an Installer 95
9.4.3. Install New System 95

9.5. Check the Running State On-line 97

9.5.1. Check the Charging Function of the Product..... 97

9.5.2. Check the PV Generation and Discharging Function of the Product..... 99

9.5.3. Check the UPS State of the Product 100

9.6. Instruct the End User to Install the APP 100

10. Maintenance and Troubleshooting 101

10.1. Routine Maintenance..... 101

10.2. Troubleshooting 102

10.2.1. Inverter Error Troubleshooting 102

10.2.2. Battery Protection Description..... 113

10.2.3. Battery Error Description..... 114

11. Uninstallation & Return 115

11.1. Removing the Product..... 115

11.2. Packing the Product..... 115

11.3. Disposing of the Product..... 115

12. Specification 116

12.1. Datasheet of Inverter SMILE5-INV 116

12.2. Datasheet of Battery 118

13. Appendix 1: System Overview..... 121

14. Appendix 2: Regional Application Standard 127

1. INTRODUCTION

1.1. Content and Structure of this Document

This document is valid for product of SMILE5 system which include inverter SMILE5-INV and battery M4856-P, SMILE5-Bat, SMILE-Bat-5.8P, SMILE-Bat-10.1P, SMILE-Bat-10.3P, SMILE-Bat-13.3P.

This document describes the mounting, installation, commissioning, configuration, operation, troubleshooting and decommissioning of the product as well as the operation of the product user interface.

Observe all documentation that accompanies the product, keep them in a convenient place and available at all times.

Illustrations in this document are reduced to the essential information and may deviate from the real product.

1.2. Target Group

This document is intended for qualified persons and end users. Only qualified persons are allowed to perform the operations marked with a warning symbol in this document. Tasks that do not require any specific qualifications will not be marked and can be performed by the end user. Qualified persons must have.

- Knowledge of working principle of inverters.
- Knowledge of how to deal with the dangers and risks associated with installing and using electrical devices, batteries and systems.
- Knowledge of the installation and commissioning of electrical devices and systems.
- Knowledge of the applicable standards and directives.
- Understood and complied with this document, including all safety precautions.
- Understood and complied with the documents of the battery manufacturer, including all safety precautions.

1.3. Levels of Warning Messages

The following levels of warning messages may occur when handling the product

DANGER

DANGER indicates a hazardous situation which, if not avoided, will result in death or serious injury.

WARNING

WARNING indicates a hazardous situation which, if not avoided, could result in death or serious injury.

CAUTION

CAUTION indicates a hazardous situation which, if not avoided, could result in minor or moderate injury.

NOTICE

NOTICE indicates a situation which, if not avoided, can result in property damage.

INFORMATION provides tips which are valuable for the optimal installation and operation of the product.

1.4. Definition of Abbreviations and Nouns

A

AC	alternating current
APP	application
AUX	auxiliary

B

BAT	battery
BMS	battery management system

D

DC	direct current

E

EMS	energy management system

I

INV	inverter

P

PV	photovoltaic

2. Safety

2.1. Intended Use

The inverter, battery packs and the electricity meters make up a system for optimization of self-consumption for a household. The inverter can achieve bidirectional transfer between AC current and DC current. The battery pack is used for the energy storage.

The SMILE5 system is suitable for indoor and outdoor installation.

The SMILE5-INV must only be operated with PV arrays of protection class II in accordance with IEC 61730, application class A. The PV modules must be compatible with this product.

PV modules with a high capacity to ground must only be used if their coupling capacity does not exceed 1.0 µF.

All components must operate in a scenario suitable for their operation.

Be sure to use this product in accordance with the information provided in the accompanying documents and local applicable standards and directives. Any other operation may cause personal injury or property damage.

Alterations to the product, e.g. changes or modifications, are only permitted with the express written permission of AlphaESS. Unauthorized alterations will void guarantee and warranty claims. AlphaESS shall not be held liable for any damage caused by such changes.

Any use of the product other than that described in the Intended Use section does not qualify as appropriate.

The enclosed documentation is an integral part of this product. Keep the documentation in a convenient place for future reference and comply with all instructions contained therein.

The type label must remain permanently attached to the product.

2.2. Safety Instructions for Battery

2.2.1. General Safety Precautions

- Overvoltage or wrong wiring can damage the battery pack and cause deflagration, which can be extremely dangerous.
- All types of breakdown of the battery may lead to a leakage of electrolyte or flammable gas.
- Battery pack is not user-serviceable. There is high voltage in the device.
- Read the label with Warning Symbols and Precautions, which is on the right side of the battery pack.
- Do not connect any AC conductors or PV conductors directly to the battery pack which should be only connected to the inverter.
- Do not charge or discharge damaged battery.
- Do not damage the battery pack in such ways as dropping, deforming, impacting, cutting or penetrating with a sharp object. It may cause a leakage of electrolyte or fire.
- Do not expose battery to open flame.

2.2.2. Response to Emergency Situations

The battery pack is composed of multiple batteries and designed to prevent the danger caused by malfunction.

- If the user touches the inner material of the battery cells due to damage to the shell, the following actions are recommended.

1. Inhalation: Leave the contaminated area immediately and seek medical attention.
2. Eye injuries: Rinse eyes with running water for 15 minutes and seek medical attention.
3. Skin injuries: Wash the contacted area with soap thoroughly and seek medical attention.
4. Ingestion: Induce vomiting and seek medical attention.

If a fire breaks out in the place where the battery pack is installed, perform the following countermeasures:

- Fire extinguishing media

1. Respirator is not required during normal operations.
2. Use FM-200 or CO^2 extinguisher for battery fire.
3. Use an ABC fire extinguisher, if the fire is not from battery and not spread to it yet.

- Firefighting instructions

1. If fire occurs when charging batteries, if it is safe to do so, disconnect the battery pack circuit breaker to shut off the power to charge.
2. If the battery pack is not on fire yet, extinguish the fire before the battery pack catches fire.

3. If the battery pack is on fire, do not try to extinguish but evacuate people immediately.

WARNING

There may be a possible explosion when batteries are heated above 150°C.
When the battery pack is burning, it leaks poisonous gases. Do not approach.

- Effective ways to deal with accidents

1. On land: Place damaged battery into a segregated place and call local fire department or service engineer.
2. In water: Stay out of the water and don't touch anything if any part of the battery, inverter, or wiring is submerged.
3. Do not use submerged battery again and contact the service engineer.

2.3. Important Safety Instructions

DANGER

Danger to life due to electric shock when live components or cables are touched.

There is high voltage in the conductive components or cables of the product. Touching live parts and cables can result in death or lethal injuries due to electric shock.

- Do not touch non-insulated parts or cables.
- Disconnect the product from voltage sources and make sure it cannot be reconnected before working on the inverter or the battery pack.
- After disconnection, wait for 5 minutes until the capacitors have discharged.
- Do not open the product.
- Wear suitable personal protective equipment for all operations on the product.

DANGER

Danger to life due to danger voltages on the battery pack.

There is danger voltage at the pin connector for the power cable. Reaching into the pin connector for the power cable can result in lethal electric shock.

- Do not open the battery pack.
- Do not wipe over the battery pack with a damp cloth.
- Leave the protective caps on the pin connectors for the batteries power connection until the inverter cables are connected to the battery pack.
- Disconnect the system from voltage sources and make sure it cannot be reconnected before working on the inverter or the battery pack.

WARNING

Risk of chemical burns from electrolyte or toxic gases.

During normal operation, no electrolyte would leak from the battery pack and no toxic gases would form. Despite careful construction, if the battery pack is damaged or a fault occurs, it is possible that electrolyte may be leaked or toxic gases may form.

- Store the battery pack in a cool and dry place.
- Do not drop the battery pack or damage it with sharp objects.
- Only set the battery pack down on its back or its bottom.
- Do not open the battery pack.
- Do not install or operate the battery pack in potentially explosive atmosphere or areas of high humidity.
- If moisture has penetrated the battery pack (e.g. due to a damaged housing), do not install or operate the battery pack.
- In case of contact with electrolyte, rinse the affected areas immediately with water and consult a doctor without delay.

CAUTION

Risk of burns due to hot heatsink and housing.

The heatsink and housing can get hot during operation.
During operation, do not touch any parts other than the cover of the inverter.

NOTICE

Damage to the inverter due to electrostatic discharge.

- Touching electronic components can cause damage to or destroy the inverter through electrostatic discharge.
- Ground yourself before touching any component.

NOTICE

Damage due to cleaning agents.

- The use of cleaning agents may cause damage to the product and its components.
- Clean the product and all its components only with a cloth moistened with clear water.

DANGER

Danger to life due to electric shock when live components or PV cables are touched.

When PV panels exposed to sunlight, the PV array generates high DC voltage which presents in the DC conductors. Touching the live DC cables can result in death or lethal injuries due to electric shock.

- Disconnect the inverter from voltage sources and make sure it cannot be reconnected before working on the device.
- Do not touch non-insulated parts or cables.
- Do not disconnect the DC connectors under load.
- Wear suitable personal protective equipment for all work on the inverter.

DANGER

Danger to life due to electric shock from touching an ungrounded PV module or array frame.

- Touching ungrounded PV modules or array frames can result in death or lethal injuries due to electric shock.
- Connect and ground the frame of the PV modules, the array frame and the electrically conductive surfaces so that there is continuous conduction.
- Observe the applicable local regulations.

DANGER

Danger to life due to electric shock when touching live system components in case of a ground fault.

When a ground fault occurs, parts of the system may still be live. Touching live parts and cables can result in death or lethal injuries due to electric shock.

- Disconnect the product from voltage sources and make sure it cannot be reconnected before working on the device.
- Touch the cables of the PV array on the insulation only.
- Do not touch any parts of the substructure or frame of the PV array.
- Do not connect PV strings with ground faults to the inverter.

2.4. Symbols explanation

Symbols on the type label of the inverter:

Symbol	Explanation
	Beware of a danger zone This symbol indicates that the product must be additionally grounded if additional grounding or equipotential bonding is required at the installation site.
	Beware of electrical voltage The product operates at high voltages.
	Beware of hot surface The product can get hot during operation.
	Danger to life due to high voltages in the inverter, observe a waiting time of 5 minutes. Prior to performing any work on the inverter, dis-connect it from all voltage sources as described in this document.
	WEEE designation Do not dispose of the product together with the household waste but in accordance with the disposal regulations for electronic waste applicable at the installation site.
	Observe the documentation
	CE marking The product complies with the requirements of the applicable EU directives.
	Certified safety The product is TUV-tested and complies with the requirements of the EU Equipment and Product Safety Act.
	RCM (Regulatory Compliance Mark) The product complies with the requirements of the applicable Australian standards.
	UKCA marking The product complies with the regulations of the applicable laws of England, Wales and Scotland.
	RoHS labeling The product complies with the requirements of the applicable EU directives.

Symbols on the type label and warning label of the battery pack.

Symbol	Explanation
	Beware of a danger zone This symbol indicates that the battery pack must be additionally grounded if additional grounding or equipotential bonding is required at the installation site.
	Risk of chemical burns
	Risk of explosion
	Observe the documentation
	Risk of electrolyte leakage
	CE marking The product complies with the requirements of the applicable EU directives.
	Refer to the instruction for operation
	Use eye protection
	Fire, naked light and smoking prohibited
	No nearing
	Do not dispose of the battery pack together with the household waste but in accordance with the locally applicable disposal regulations for batteries
	Recycling code
UN38.3	Marking for transport of dangerous goods The product passes the certifications of the UN38.3

3. Product Introduction and Application Scenarios

3.1. Nomenclature introduction

Complete designation	Designation in this document
SMILE5-INV	Inverter
M4856-P, SMILE5-Bat, SMILE-Bat-5.8P, SMILE-Bat-10.1P, SMILE-Bat-10.3P, SMILE-Bat-13.3P	Battery
SMILE5 System	Energy storage system/System

3.2. Product Description

3.2.1. Inverter Electrical Interface Introduction

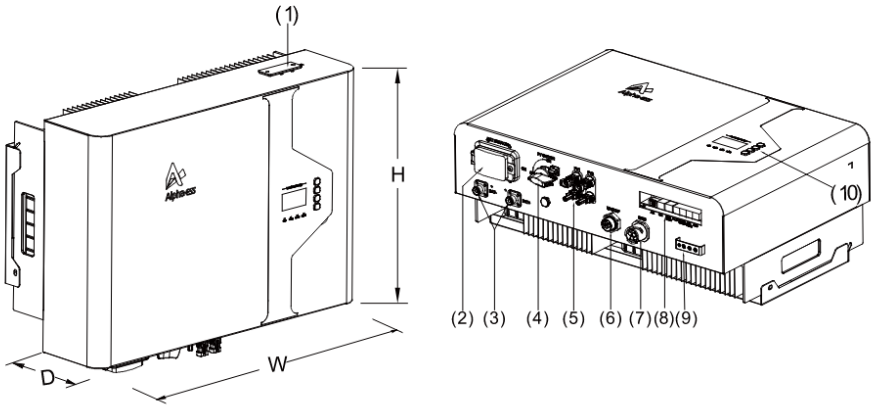

Position	Designation
1	Wi-Fi Port
2	Battery Power Connectors
3	Battery Breaker
4	PV Switch (optional)
5	PV Connector
6	Backup Connector
7	Grid Connector
8	Communication Ports
9	Grounding Bar
10	LCD

3.2.2. Inverter Display Interface Introduction

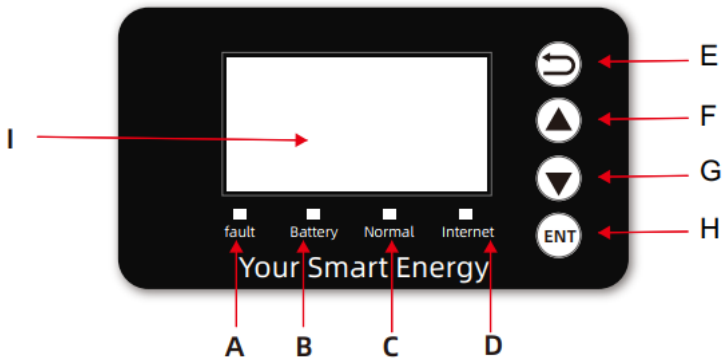

SMILE5-INV Interface

Table 1 Function Description

Object	Name	Description
A	**Indicator LED**	**Red:** The inverter is in fault.
B		**Green:** The battery is in charging or discharging.
C		**Green:** The inverter is in normal state.
D		**Green:** The inverter is in communication.
E	**Button Function**	Return Button: Escape from current interface or function.
F		Up button: Move cursor to upside or increase value.
G		Down Button: Move cursor to downside or decrease value.
H		ENT Button: Confirm the selection.
I	**LCD Screen**	Display the information of the inverter in this LCD screen.

3.2.2.1 Main interface of the Inverter LCD

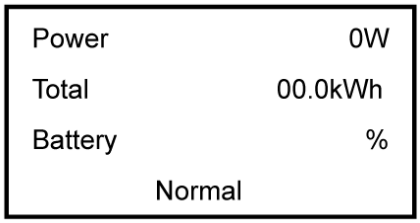

Main displays the inverter working status and information, including:

1. Power: Current PV power
2. Total: Total power generation.
3. Battery: Current remaining battery power (SOC).
4. Normal: Current working state of the equipment, including Standby.

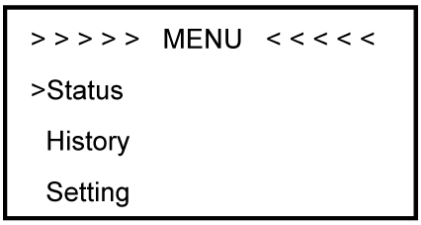

I In the Main interface, press ENT key to eenter the menu's main interface.

Use the up and down key to select a sub-menu, press the ENT key to enter the selected sub-menu, press Return key to return to the previous layer.

3.2.2.2 Display Content of Sub-Menu Status Item

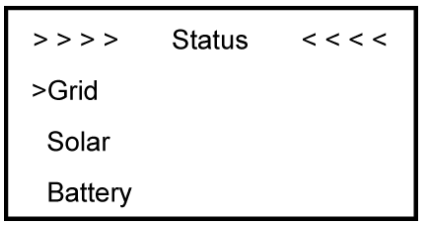

Status menu contains five sub-menus: Solar, Battery, Grid, UPS and Comm .These display the relevant information about the current physical or communication interface respectively.

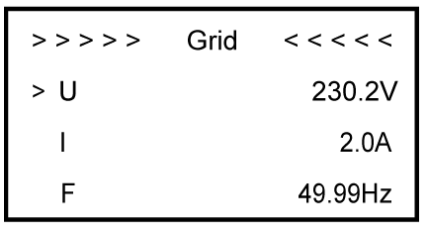

Grid interface displays the real-time information on the ultility grid side: voltage U, current I, frequency F, PInv, PMeterAC, PMeterDC.

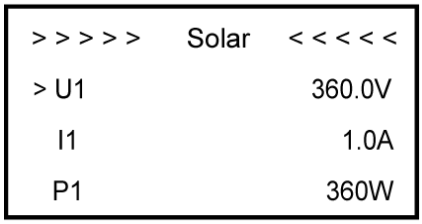

Solar interface displays the real-time information of PV side: voltage U1, current I1, power P1, voltage U2, current I2 and power P2.

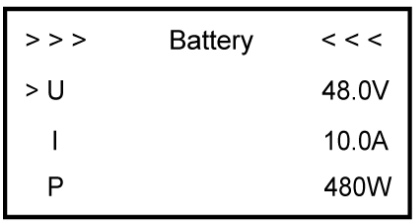

Battery interface displays the real-time information of battery side: voltage U, current I, power P, residual capacity of Battery (SOC), the internal environmental temperature Temp

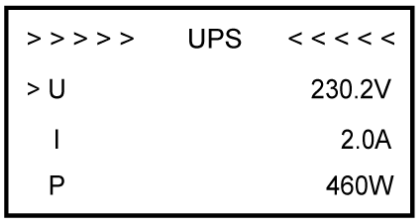

UPS interface displays the real-time information in this mode: voltage U, current I, power P, frequency F

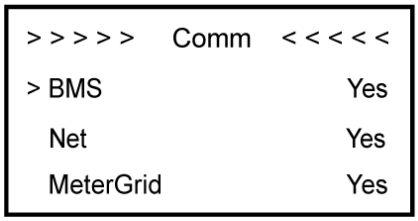

Communication interface displays the real-time communication situation of BMS, Net, MeterGrid and MeterDC.

3.2.2.3 Display Content of Sub-Menu History Item

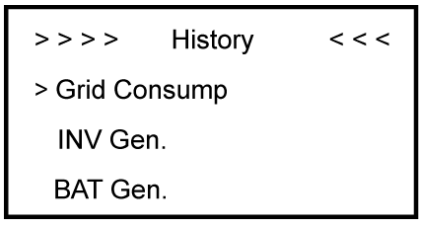

History menu contains seven sub-menus: Grid Consumption, INV Gen., BAT Gen., PV Gen., Grid Charge, PV Charge, Error Logs

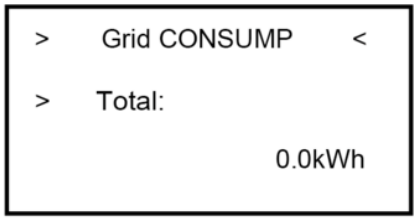

Grid Consumption interface displays today's or total load consumption from grid

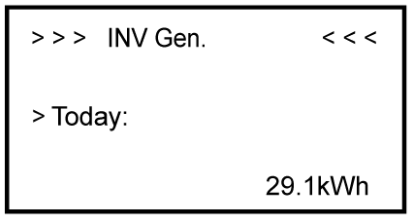

INV Gen. interface displays today's or total electricity quantity generated from SMILE5-INV.

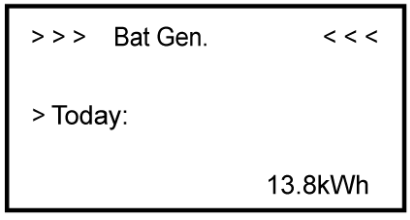

Bat Gen. interface displays today's or total electricity quantity discharged from the battery.

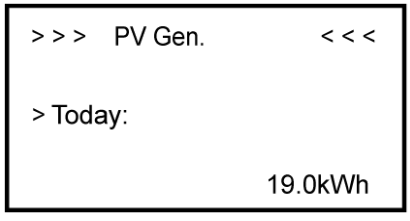

PV Gen. interface displays today's or total electricity quantity generated from the PV-panels.

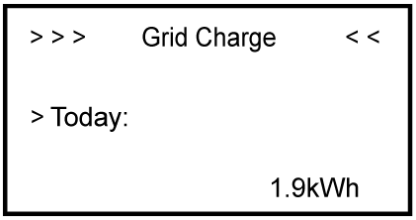

Grid Charge interface displays today's or total electricity quantity battery charging from the grid.

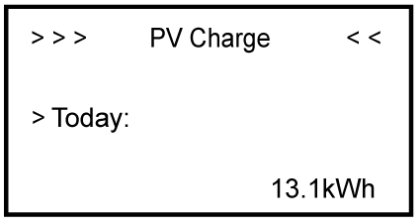

PV Charge interface displays today's or total electricity quantity battery charging from the PV-panels.

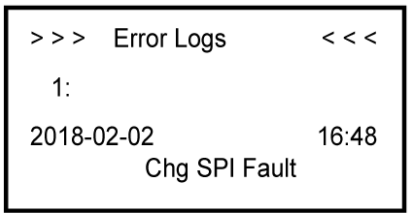

Error Logs interface displays the 10 latest fault records of this device, including the name of the fault and time of error.

3.2.2.4 Display Content of Sub-Menu Setting Item

General Setting

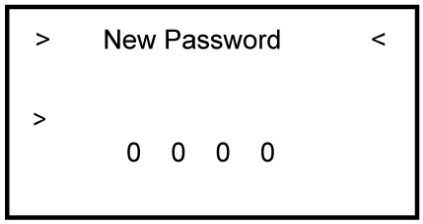

Step1: Click setting and enter the password.

The installation's password is a four-digits password: 1111, after four-digits password was correctly input, you can enter into the main Setting interface (administrator permissions).

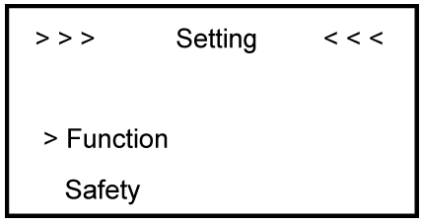

Step2: Click Function to enter function setting.

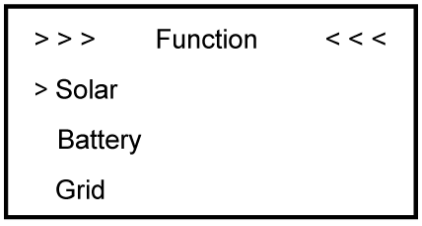

Step3: Click Solar to set the Solar relevant information.

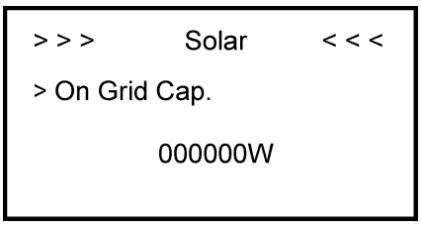

Step4: Set on-grid capacity, storage capacity and number of PV strings (MPPT number).

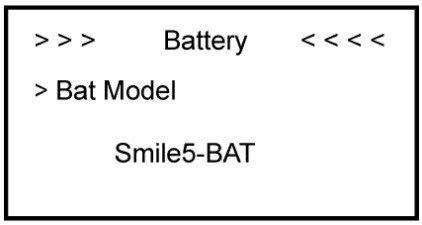

Step5: Click the Battery Function and check battery type SMILE5-BAT.

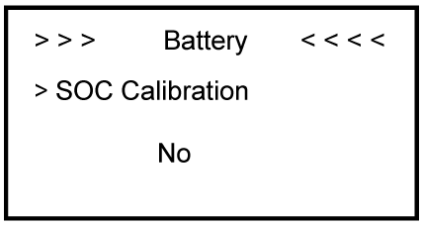

Step6: Check SOC Calibration function set No.

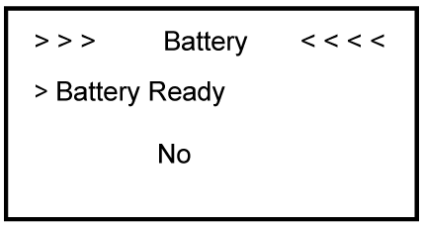

Step7: Check the Battery Ready function set No. If you only use the inverter without battery, please set it Yes.

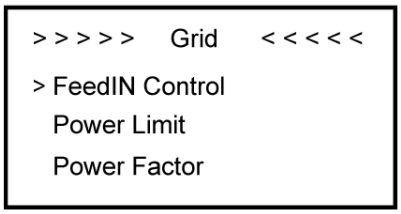

Step8: Click the Grid Function to set up relevant parameters about the grid

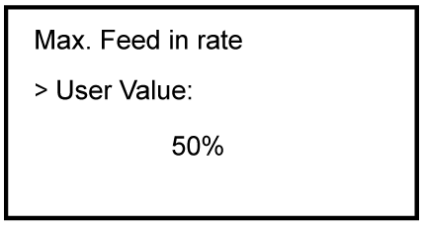

Step9: Set the Max. Feed in rate value.

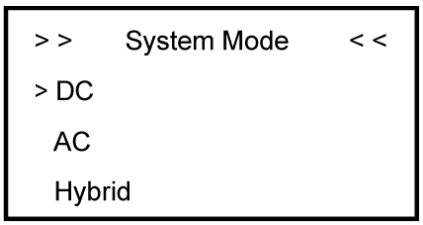

Step10: Click Function-System Mode to set system mode: DC, AC, Hybrid.



Step11: Click Safety in the setting menu. Set safety standard.

AS4777 for Australia, ARN4105 for Germany, CEI0_21 for Italy, G83_2 for Great Britain, NRS097_2_1 for South Africa, RD1699 for Spain, VDE0216 for 60Hz countries.

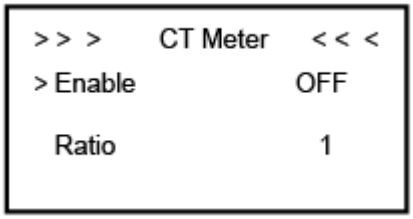

Step12: If you use CT meter, please set CT meter enable and the relevant ration

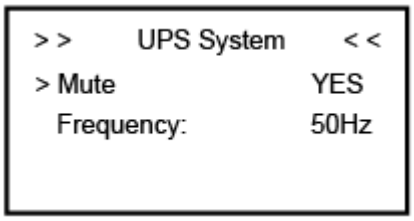

Step13: If you use UPS function, please set the mute as YES in UPS System interface and the relevant Frequency.

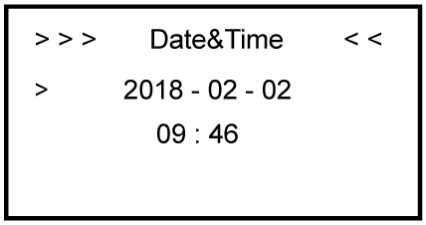

Step14: Click System in the setting menu. Click Date &Time and set up the date and time.

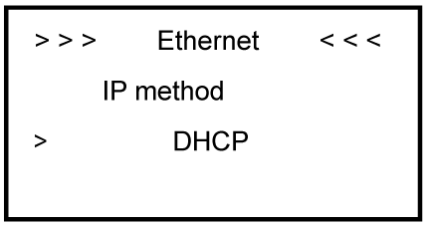

Step15: Click Ethernet to set the IP address. DHCP mode means that setup IP address is set up automatically.

If you want to set up the IP address manually, please choose manual mode.

NOTE

It is needed to set the following 3 parameters for manual mode:

IP Address: IP address;

Subnet Mask: Subnet mask;
Default Gateway: Default gateway;
Automatic display one parameter:
MAC Address: display MAC Address.

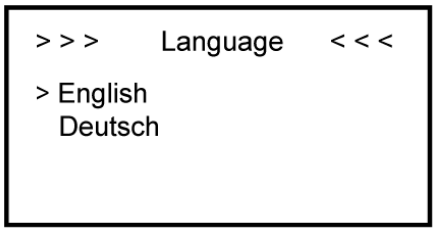

Figure 1 Date&Time Setting Interface

Step16: Click Language to set language

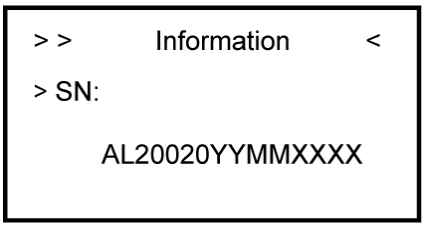

Figure 2 Date&Time Setting Interface

Step17: Make sure all the following number is correct.

3.2.3. Battery Introduction

Battery pack appearance and Dimensions

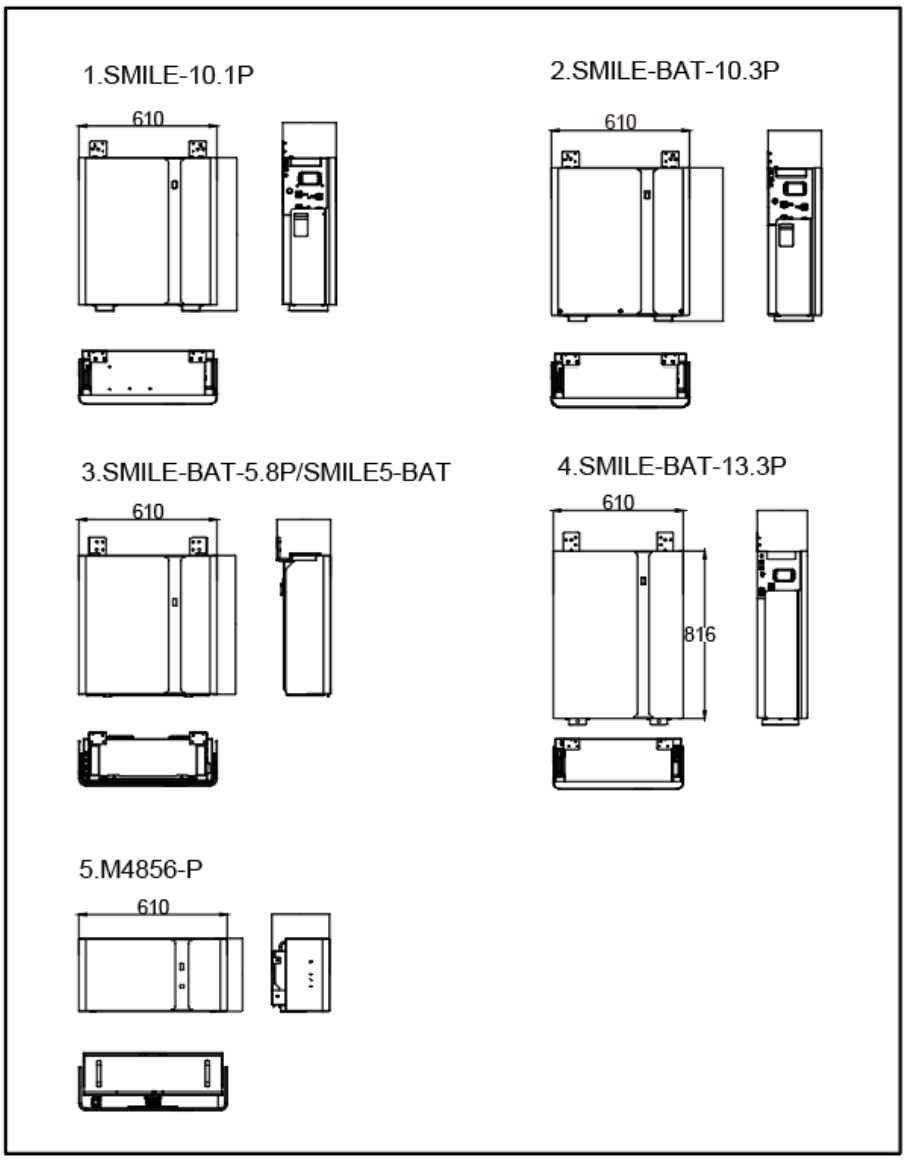

Different colors of inner grids of the battery LED display represent different states：green for SOC state, red for error state.
The LED indicators provide information about the SOC operational status of the battery pack.

Item	SOC Status	Description
SOC Description	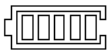	SOC<5%
	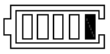	5%≤SOC<25%
		25%≤SOC<50%
		50%≤SOC<75%
		75%≤SOC<95%
		SOC≥95%
LED Outer Ring Light Flicker Status		Work: green light flicker every 10s; Standby: green light flicker every 1s; Protection: green light flicker every 3s; Error: red light flicker every 3s;

Connection area overview of M4856-P

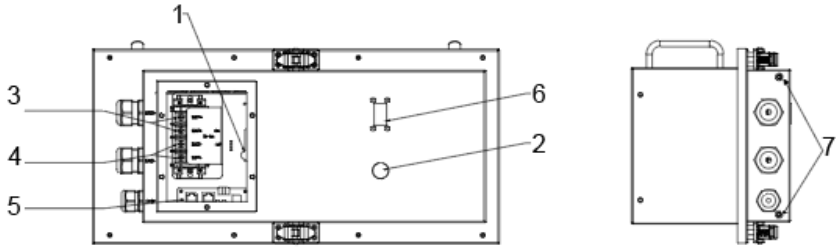

Position	Designation
1	Battery Breaker
2	Battery Power Button
3	Battery+ Power Connector
4	Battery- Power Connector
5	BMS COM Ports
6	Battery LED Display
7	Grounding

Connection area overview of SMILE5-BAT and SMILE-Bat-5.8P

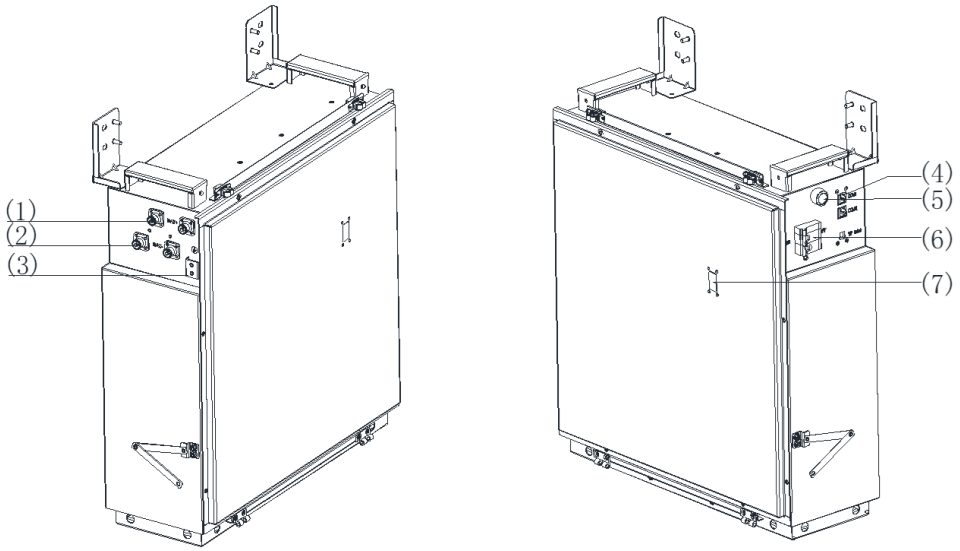

Position	Designation
1	Battery+ Power Connector
2	Battery- Power Connector
3	Grounding
4	BMS COM Ports
5	Battery Power Button
6	Battery Breaker
7	Battery LED Display

Connection area overview of SMILE-Bat-10.1, SMILE-Bat-10.3, SMILE-Bat-13.3P.

*Only SMILE-Bat-13.3P has one pair of battery power ports.

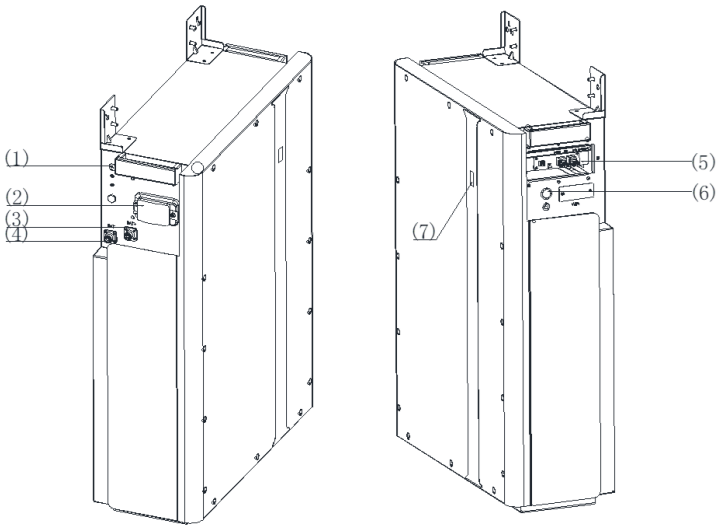

Position	Designation
1	Grounding
2	Battery Breaker
3	Battery+ Power Connector
4	Battery- Power Connector
5	BMS COM Ports
6	Battery Power Button
7	Battery LED Display

*The breaker of the battery pack is switched off when shipped.

3.3. Application Scenarios

AlphaESS SMILE5 system (includes inverter SMILE5-INV and battery M4856-P, SMILE5-Bat, SMILE-Bat-5.8P, SMILE-Bat-10.1P, SMILE-Bat-10.3P, SMILE-Bat-13.3P) can be applied in DC-coupled systems (mostly new installation), AC-coupled systems (mostly retrofit) , Hybrid-coupled systems (mostly retrofit, and increase the PV capacity), and Off-grid (with Generator) systems as the following schemes show :

3.3.1. DC-coupled Storage System

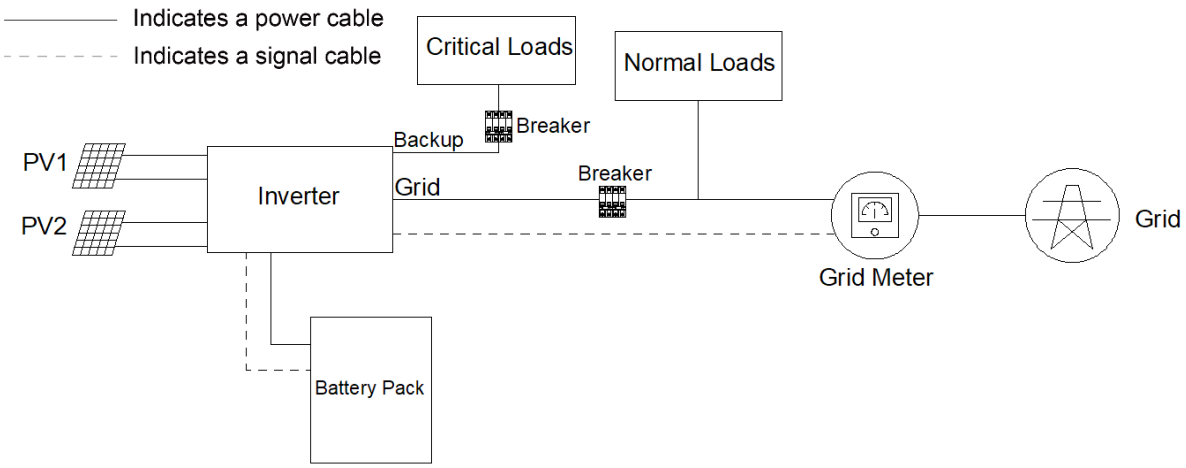

DC-coupled Storage System – Scheme

3.3.2. AC-coupled Storage System

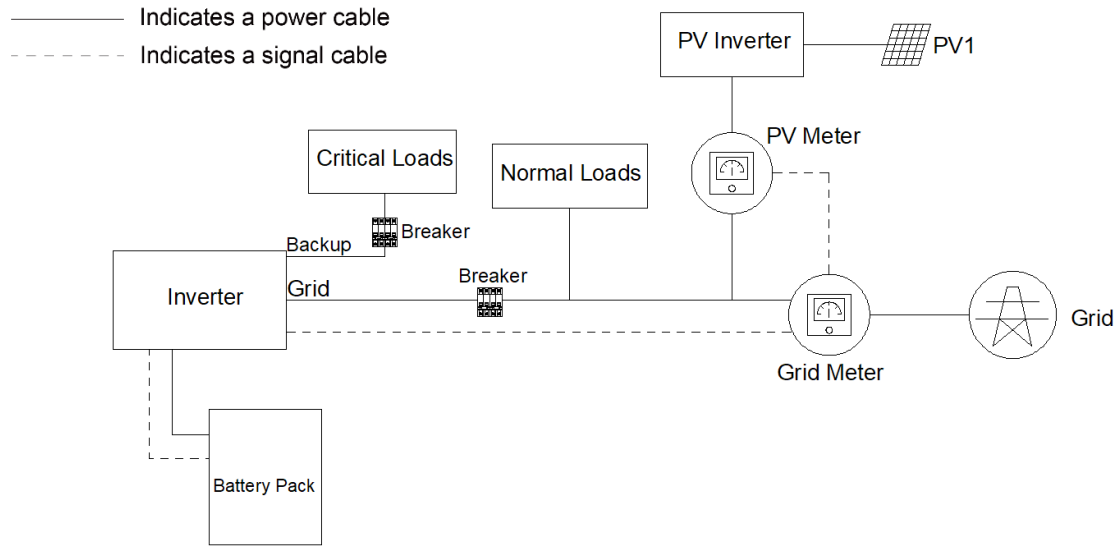

AC-coupled Storage System–Scheme

3.3.3. Hybrid-coupled Storage System

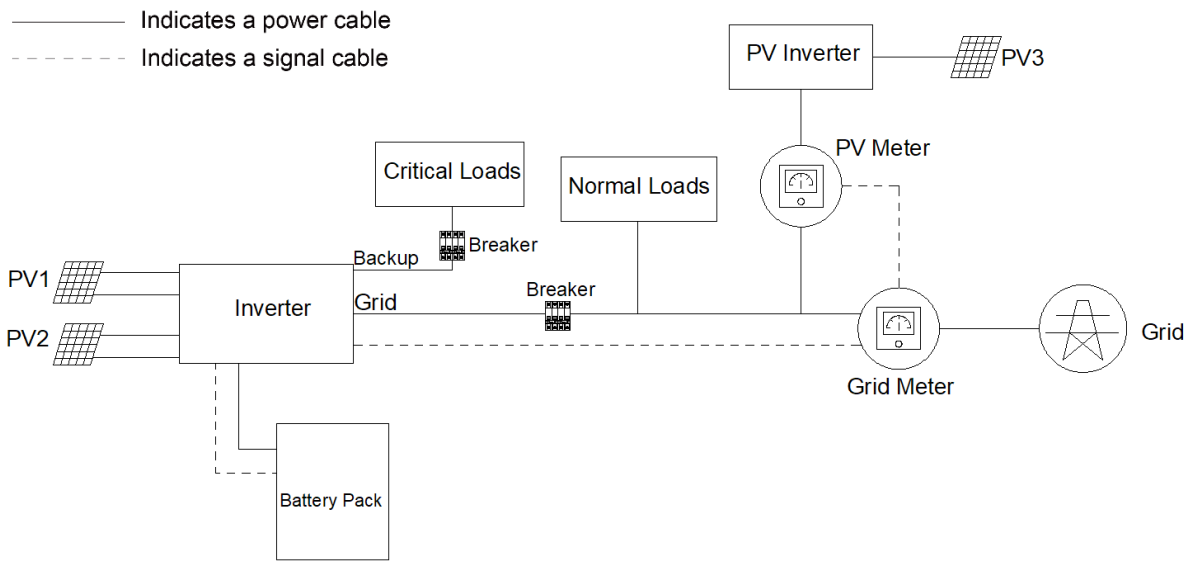

Hybrid-coupled Storage System – Scheme

3.3.4. Off-Grid Storage System

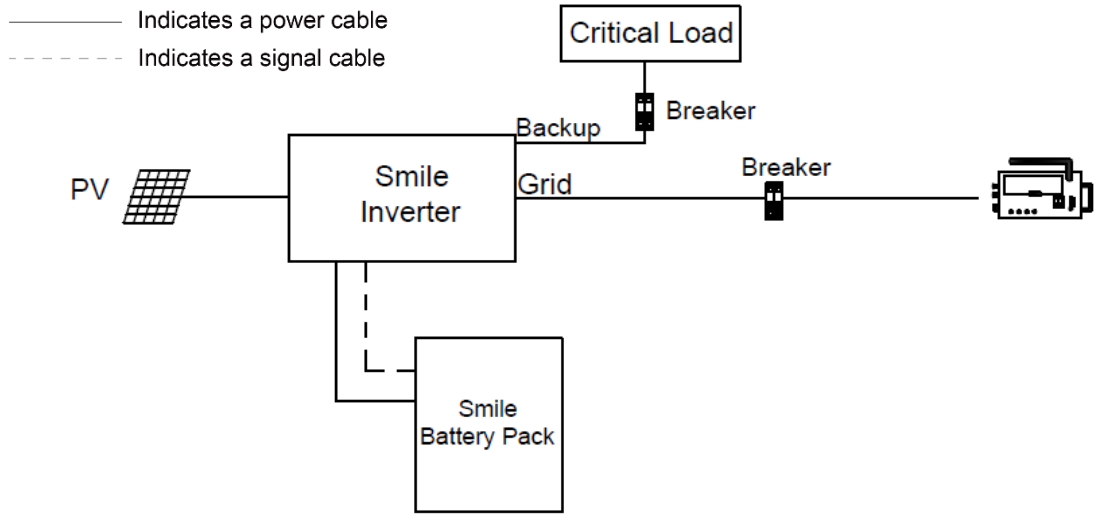

Off-grid (with Generator) Storage System–Scheme

4. Storage and Transport

4.1. Storage

4.1.1. Inverter Storage

The following requirements should be met if the inverter is not put into use directly:

1. Do not unpack the inverter.
2. Keep the storage temperature at -40~70°C and the humidity at 5%~95% RH.
3. The inverter should be stored in a clean and dry place and be protected from dust and water vapor corrosion.
4. A maximum of six inverters can be stacked. To avoid personal injury or device damage, stack inverters with caution to prevent them from falling over.
5. During the storage period, check the inverter periodically. Replace the packing materials which are damaged by insects or rodents in a timely manner.
6. If the inverters have been stored for more than two years, it must be checked and tested by professionals before being put into use.

4.1.2. Battery Storage

The following requirements should be met if the battery pack is not put into use directly:

1. Place batteries according to the signs on the packing case during storage. Do not put batteries upside down or sidelong.
2. Stack battery packing cases by complying with the stacking requirements on the external package.
3. Store the battery pack out of reach of children and animals.
4. Store the battery pack where it should be minimal dust and dirt in the area.
5. Handle batteries with caution to avoid damage.
6. The storage environment requirements are as follows:
   a. Ambient temperature: -10~55°C, recommended storage temperature: 15~30°C
   b. Relative humidity: 15%~ 85%
   c. Place batteries in a dry and clean place with proper ventilation.
   d. Place batteries in a place that is away from corrosive organic solvents and gases.
   e. Keep batteries away from direct sunlight.
   f. Keep batteries at least 2 m away from heat sources.
7. The batteries in storage must be disconnected from external devices. The indicators (if any) on the batteries should be off.

8. Batteries should be delivered based on the "first in, first out" rule.
9. The warehouse keeper should collect battery storage information every month and periodically report the battery inventory information to the planning department. The batteries that have been stored for nearly 6 months should be recharged timely.
10. If a lithium battery is stored for a long time, capacity loss may occur. After a lithium battery is stored for 12 months in the recommended storage temperature, the irreversible capacity loss rate is 3%~10%. It is recommended that batteries not be stored for a long period. If the batteries need to be stored for more than 6 months, it is recommended to recharge the batteries to 65~75% of the SOC.

4.2. Transport

During transportation, please follow these guidelines:

1. Priority to use the original packaging for transportation. If the original packaging is not available, put the product inside a suitable cardboard box and seal it properly.
2. Handle with care, choose the corresponding handling method according to the weight, and pay attention to safety;

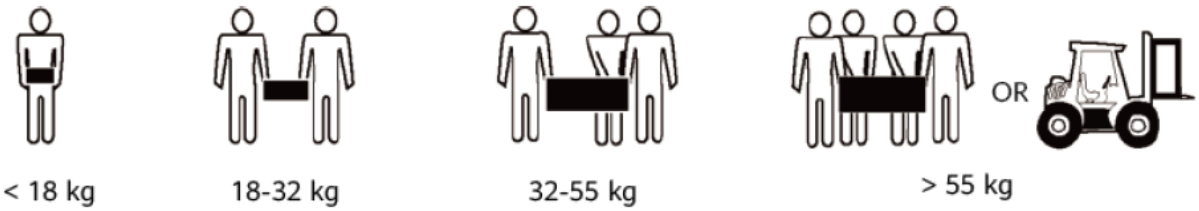

3. During transportation, please keep the packaging away from dangerous sources and take waterproof measures;
4. Please fix the packaging during transportation to prevent falling or mechanical impact;

5. Mounting

5.1. Checking the Outer Packing

Before unpacking the product, check the outer packing for damage, such as holes and cracks. If any damage is found, do not unpack the product and contact your dealer as soon as possible.

5.2. Scope of Delivery

Check the scope of delivery for completeness and any externally visible damage. Contact your distributor if the scope of delivery is incomplete or damaged.

SMILE5-INV				
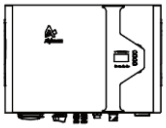	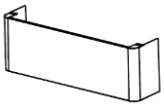	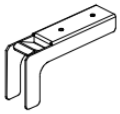	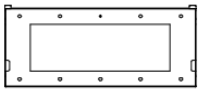	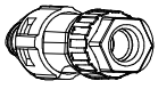
SMILE5-INV X1	Cable Cover X1	Holder for Cable Cover X2	Wall Bracket X1	Backup Connector X1
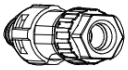	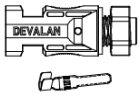	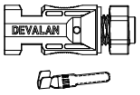		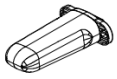
Grid Connector X1	PV + Connectors X2	PV -Connectors X2	T20 Screwdriver X1	WiFi Module X1
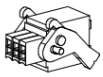			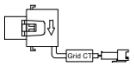	
6 Pin AUX Terminal Block X1	M5*12 Screw X2	Ground ring Terminal Lug X3	Grid CT X1	Grid CT Cable X1
	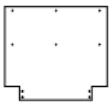	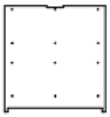	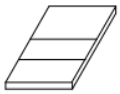	
Wall Anchor ST6*55 X6	M4856-P Position Plate X1	SMILE-Bat Series Position Plate X1	Documentation sheets X1	Communication Cable X1

SMILE5-BAT, SMILE-BAT-5.8P, SMILE-BAT-10.1P, SMILE-BAT-10.3P, SMILE-BAT-13.3P			
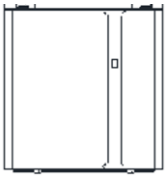	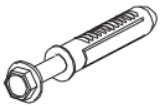	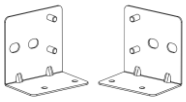	
SMILE-Bat Series X1	Wall Anchor X4	Wall Panel X2	Battery Communication Cable X1
	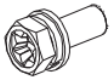		
Bat Power Cable (1 black, 1 red) X2	M5*10 Screw X6	Quick Installation Guide X1	
M4856-P			
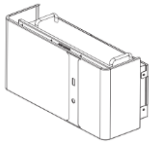	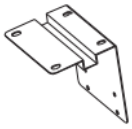	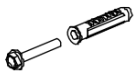	
Battery Pack X1	Expansion Bracket X1	Wall Anchor ST6*55 X8	M5*10 Screws X6
			
Quick Installation Guide X1	M4 Flange X2	Expansion Bat ±Power Cable X1	Battery Communication Cable X1

5.3. Requirements for Mounting

WARNING

Danger to life due to fire or explosion

Despite careful construction, electrical devices can cause fires.

- Do not mount the system in areas containing highly flammable materials or gases.
- Do not mount the system in potentially explosive atmospheres.

5.3.1. Basic Requirements

- The SMILE5-INV inverter is suitable for indoor and outdoor use.
  For battery pack, we have both indoor version and outdoor version, please check the batter type label.
- Do not install the inverter in a place where a person can easily touch it because its housing and heatsink are hot during operation.
- Do not mount the system in areas with flammable or explosive materials.
- Do not mount the inverter at a place within children's reach.
- Do not mount the system outdoors in salt areas because it will be corroded there and may cause fire. A salt area refers to the region within 500m from the coast or prone to sea breeze. The regions prone to sea breeze vary depending on weather conditions (such as typhoons and monsoons) or terrains (such as dams and hills).

5.3.2. Mounting Environment Requirements

- The system must be mounted in a well-ventilated environment to ensure good heat dissipation.
- When mounted under direct sunlight, the power of the system may be derated due to additional temperature rise.
- Mount the system in a sheltered place or mount an awning over the product.
- The optimal temperature range for the battery pack to operate is from15 to 30℃.
- Do not expose or place near water sources like downspouts or sprinklers.
- If the battery pack is mounted in the garage, then ensure that it is above the height of the vehicle bumper and/ or door.

5.3.3. Mounting Structure Requirements

- The mounting structure where the system is mounted must be fireproof.
- Do not mount the system on flammable building materials.
- Ensure that the mounting surface is solid enough to bear the weight load.
- In residential areas, do not mount the inverter on drywalls or walls made of similar materials which have a weak sound insulation performance because the noise generated by the inverter is noticeable.

5.3.4. Mounting Angle and Stack Requirement

The inverter should be mounted on the wall.
The installation angle requirement is as follow:

- Do not mount the inverter at forward tilted, side tilted, horizontal, or upside down positions.

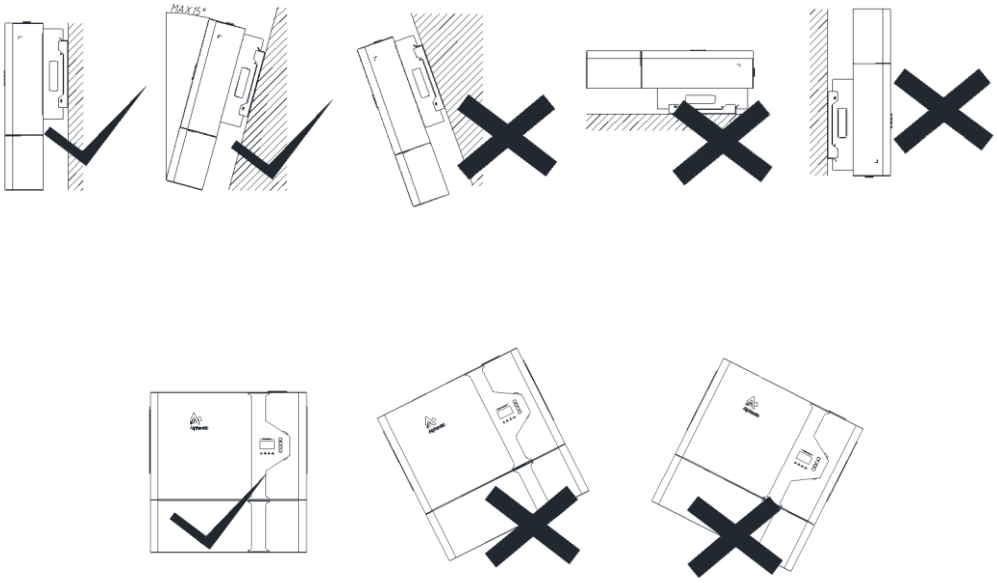

5.3.5. Mounting Space Requirements

- Reserve sufficient clearance around the product to ensure sufficient space for installation, maintenance and heat dissipation.
- The side clearance is a recommendation. Keep the clearance as short as you can if there is no influence to the operation and maintenance.

Recommended clearances for SMILE-Bat series

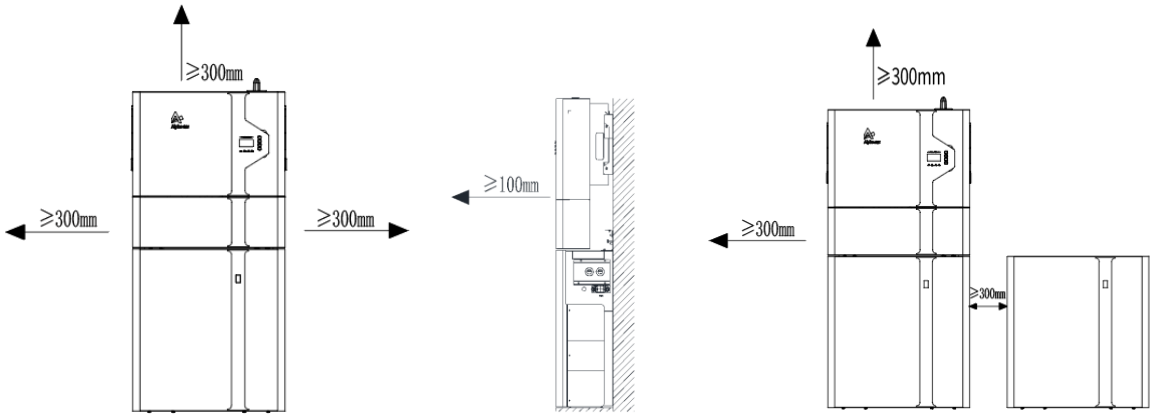

Recommended clearances for M4856-P

- Reserve sufficient clearance around the product to ensure sufficient space for installation, maintenance and heat dissipation.
- The side clearance is a recommendation. Keep the clearance as short as you can if there is no influence to the operation and maintenance.
- The clearance below is a 'recommendation' only and a minimum of 150 ~ 200 mm off the ground was advisable to protect from submergence.

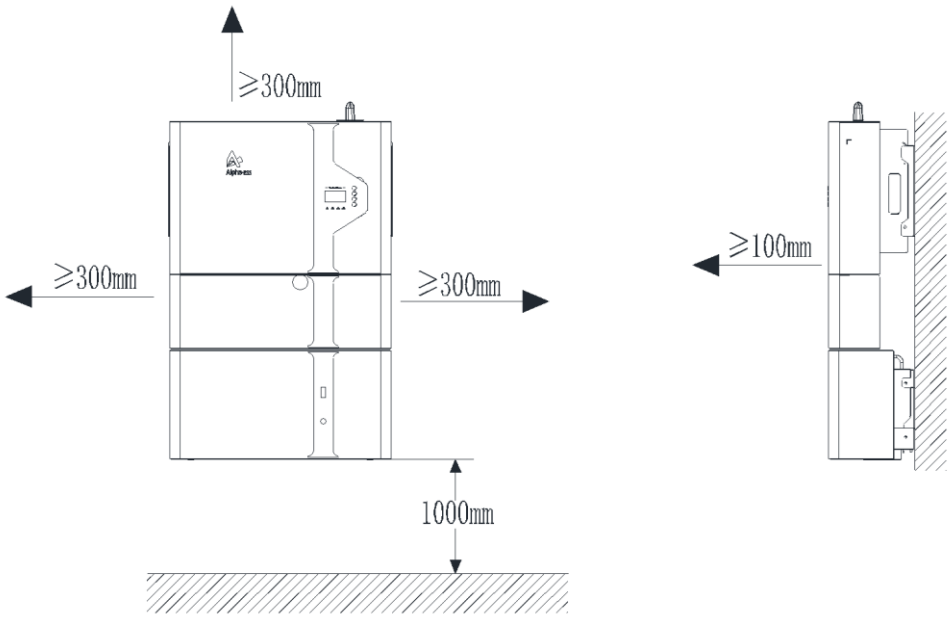

*Depending on quantity of the expansion batteries

5.4. Preparing Tools and Instruments

Category	Tools and Instruments		
Installation			
	Hammer drill (with a Φ10 mm drill bit)	Torque socket wrench SW10	Multimeter (DC voltage range ≥ 1000 V DC)
	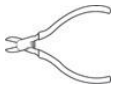	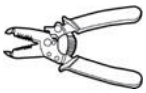	
	Diagonal pliers	Wire stripper	T20 screwdriver (torque range: 0-5 N m) L＜200mm
			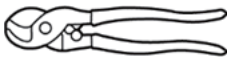
	Rubber mallet	Utility knife	Cable cutter
			
	Crimping tool (model: PV-CZM-22100)	Cord end terminal crimper	Disassembly and Assembly Tool of PV connector
			
	Vacuum cleaner	Heat shrink tubing	Heat gun
	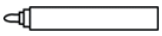		
	Marker	Measuring tape	Bubble or digital level
Personal Protective Equipment			
	Safety gloves	Safety goggles	Anti-dust respirator
			
	Safety shoes		

5.5. Mounting the Product

5.5.1. Mounting the Battery

1）for SMILE-BAT series batteries

a. Take out the battery from the carton, transport it to the installation site with a hand-cart which bearing capacity should be greater than 200kg, tied with bandage.

b. Place the battery against the wall, mount the wall panels and then mark drill positions.

c. Remove the wall panels and cover the top of the battery with plastic bag, then drill 4 holes on the wall with drill Φ10, insert screw anchors into the drill holes

d. After removing the plastic bag, assemble the mounting panels on top of the battery (tool: T20 screwdriver, torque: 2.5Nm), secure the wall panels with the wall using the provided screws.

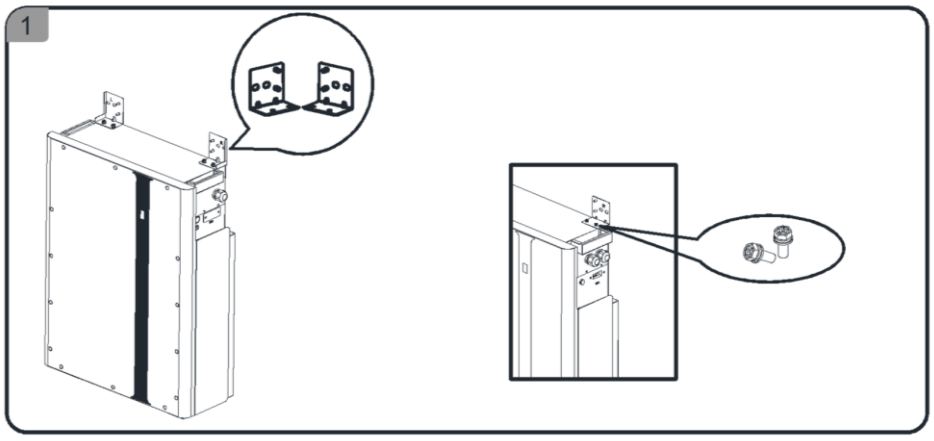

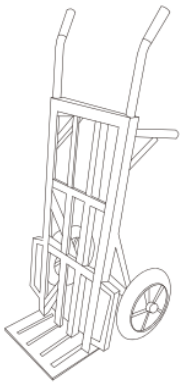

Handcart

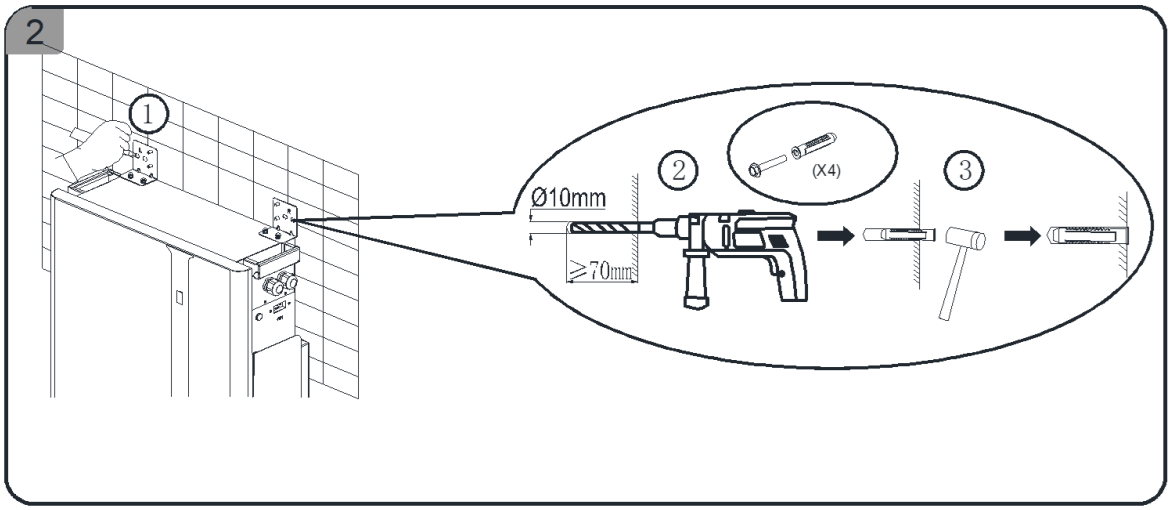

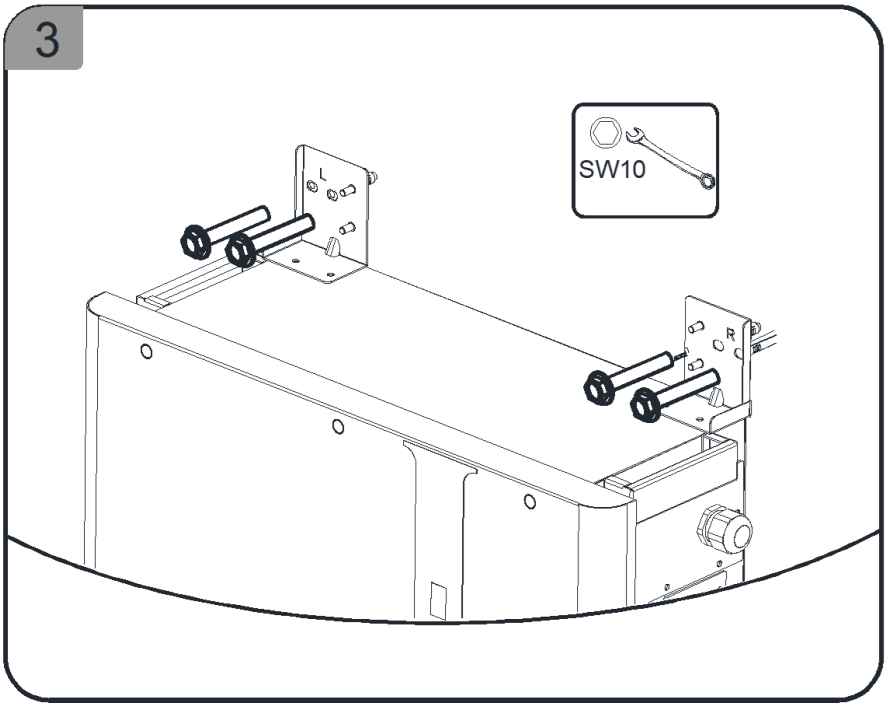

For mounting multiple batteries, please follow as above steps.

If you will install extra batteries by side, please keep the distance between two batteries greater than 300mm. You can install extra batteries up to 6 batteries in a system.

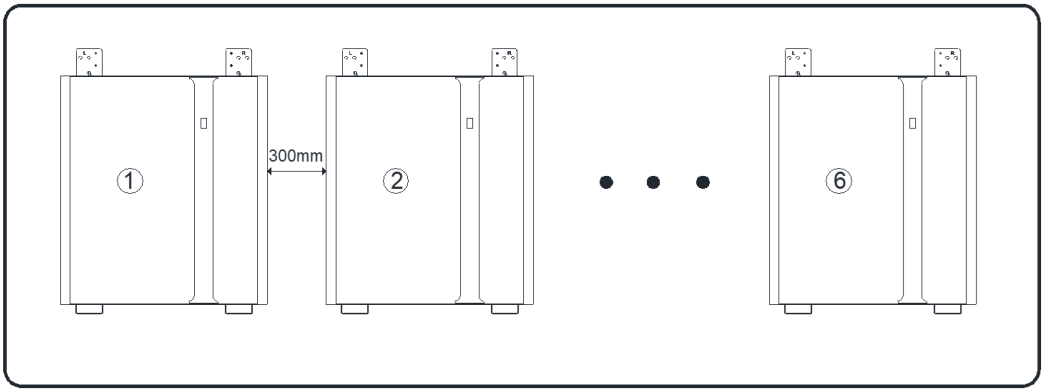

2）for battery M4856-P

a.Take out the battery from the carton, transport it to the installation site.

b.Remove the front cover by pulling forward and disassemble wall bracket with tool T20 screwdriver.

c. Align the wall bracket horizontally on the wall and mark the drill positions.

d. Set the wall bracket aside and drill the marked holes with drill Φ10.

e. Insert screw anchors into the drill holes, secure the wall bracket horizontally using the provided screws.

f. Pick up the battery into the wall mounting bracket.

g. Secure the battery to the wall mounting bracket, tighten them using a Torx screw-driver (TX 20, torque: 2.5 Nm).

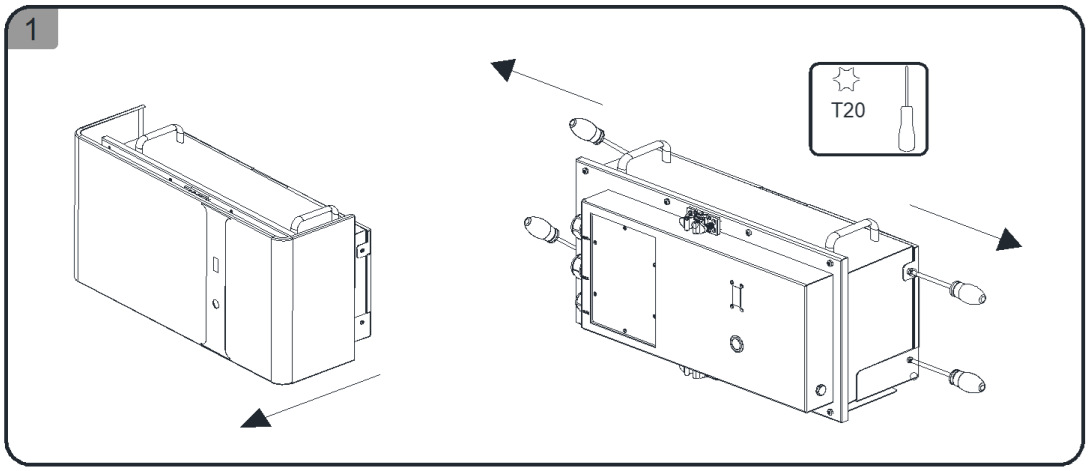

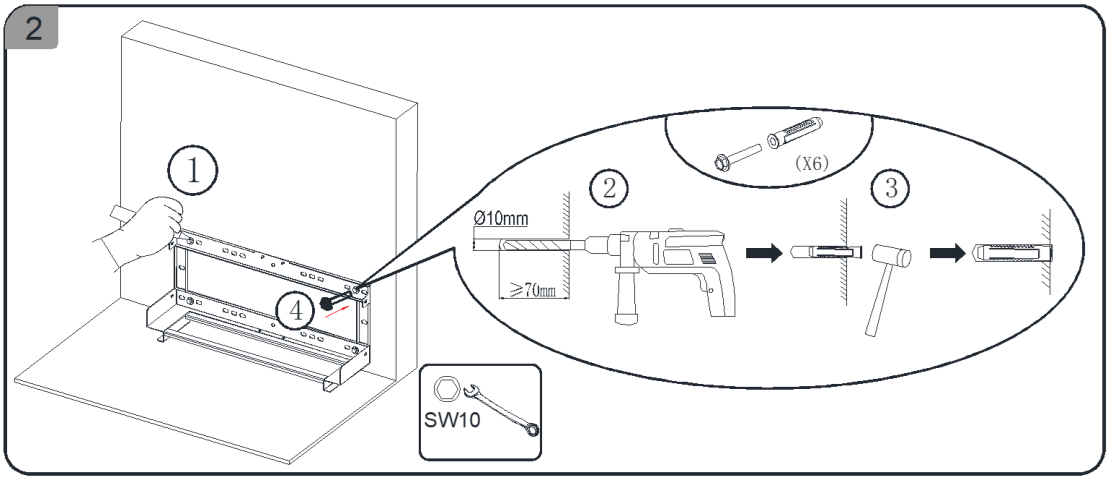

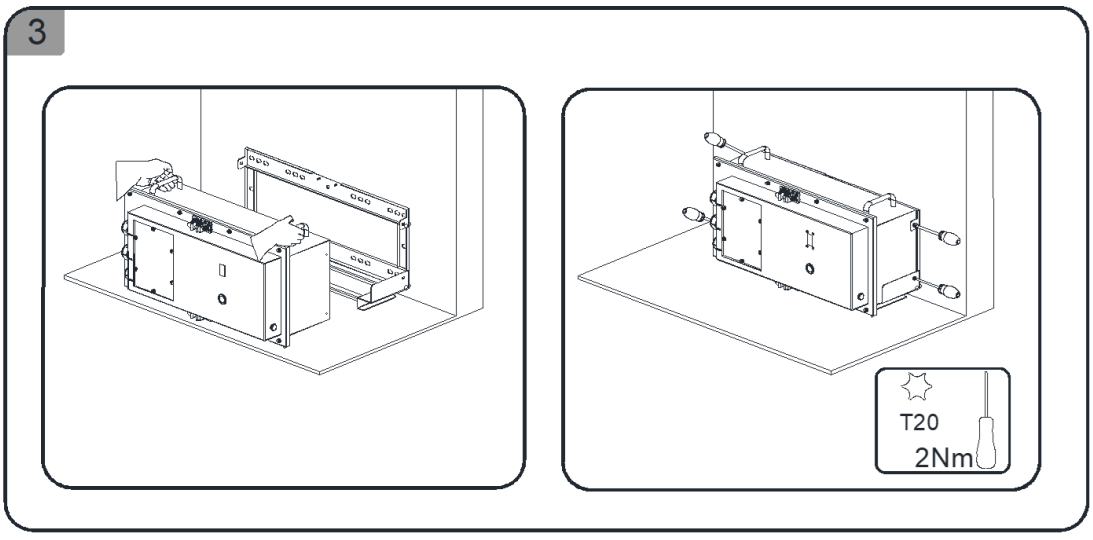

Mounting more M4856-P batteries upwards as follows.

1) Secure the expansion bracket to the M4856-P wall bracket to be mounted on its bottom with two nuts provided.

2) Place the above assembly to the below M4856-P wall bracket on the top positioning fit, and then mark the drill positions.

3) Set the wall bracket aside and drill the marked holes with drill Φ10.

4) Insert screw anchors into the drill holes, secure the wall bracket horizontally using the provided screws.

5) Pick up the battery into the wall mounting bracket. Secure the battery to the wall mounting bracket, tighten them with four screws using a Torx screwdriver(TX 20, torque:2.5Nm).

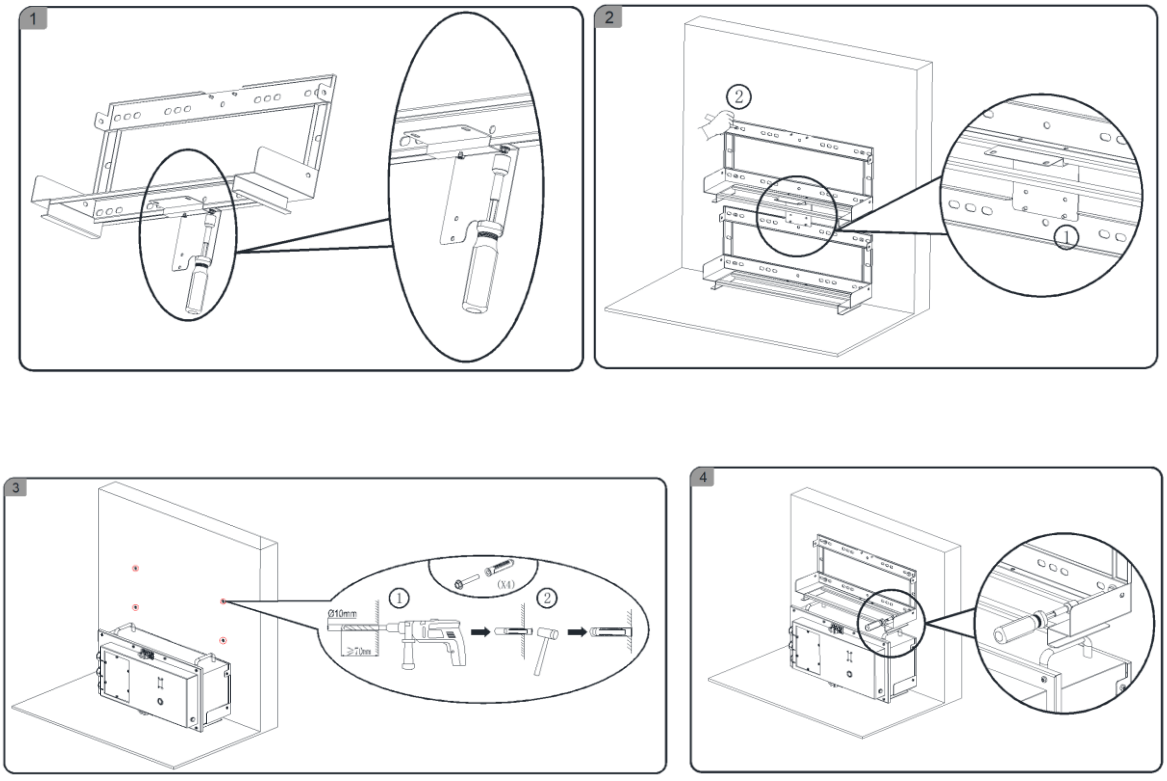

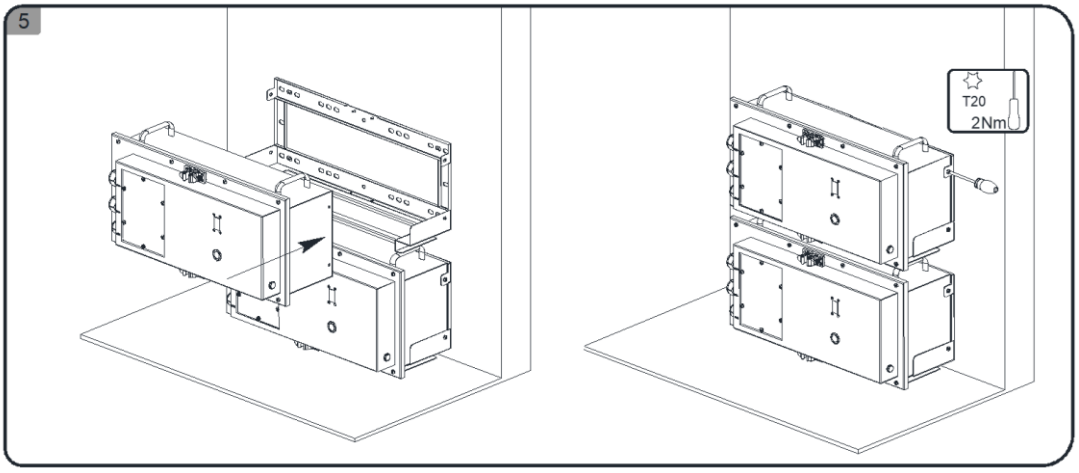

Mount the expansion battery M4856-P downwards as follows.

1) Secure the expansion bracket to the M4856-P wall bracket to be mounted on its top with two nuts provided.

2) Locate the above assembly to the top M4856-P wall bracket on its bottom positioning fit, and then mark the drill positions.

3) Set the wall bracket aside and drill the marked holes with drill Φ10.

4) Insert screw anchors into the drill holes, secure the wall bracket horizontally using the provided screws.

5)Pick up the battery into the wall mounting bracket. Secure the battery to the wall mounting bracket, tighten then with four screws using a Torx screwdriver(TX 20, torque:2.5Nm).

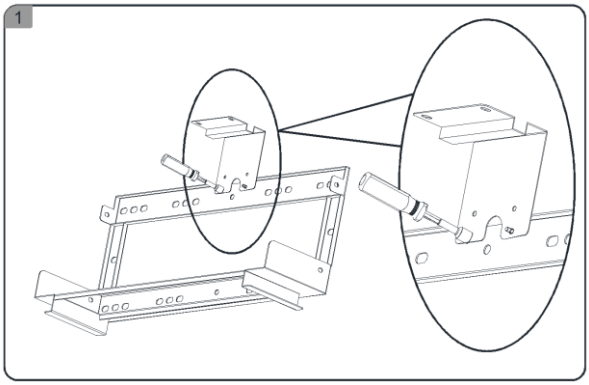

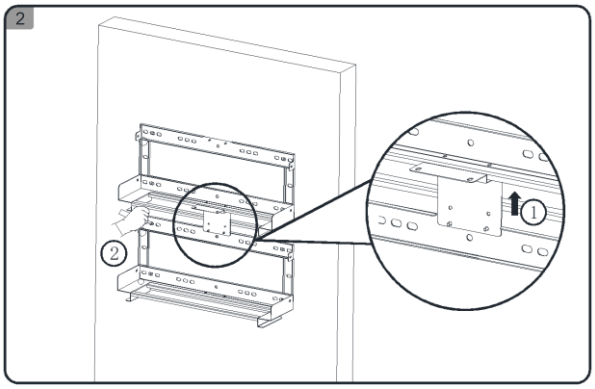

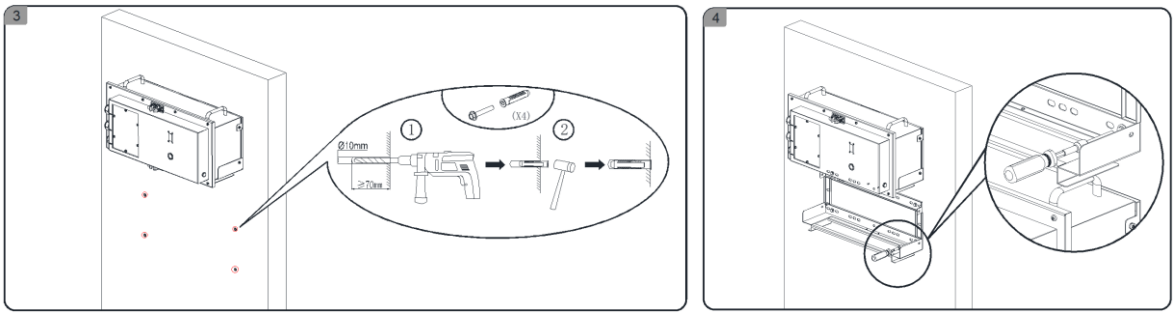

5.5.2. Mounting the Inverter

There are 2 kinds of position plates in the attachment of SMILE5-INV.

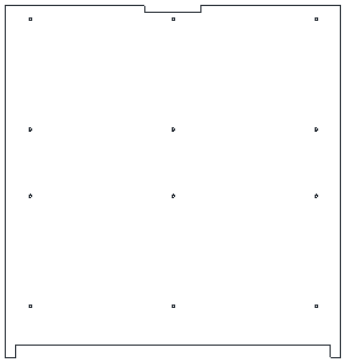

M4856-P Position Plate

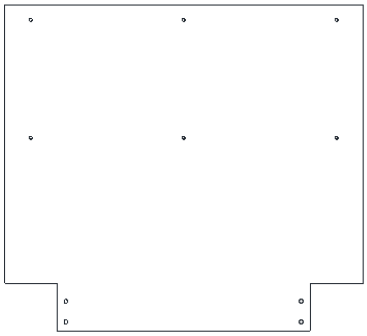

SMILE-Bat Series Position Plate

Locate the right position plate to the wall panels of SMILE-Bat series.

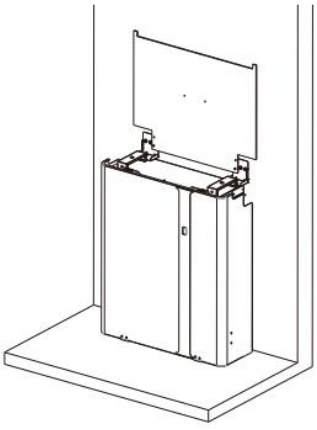

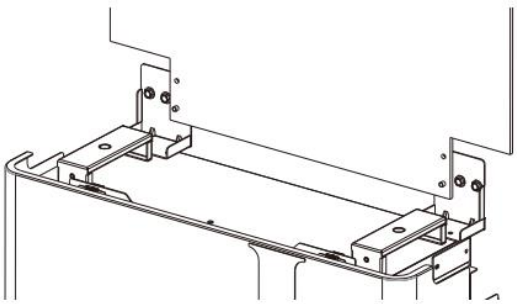

Locate the left position plate to the wall bracket of M4856-P.

There are two handles on the battery top for the new version of M4856-P.

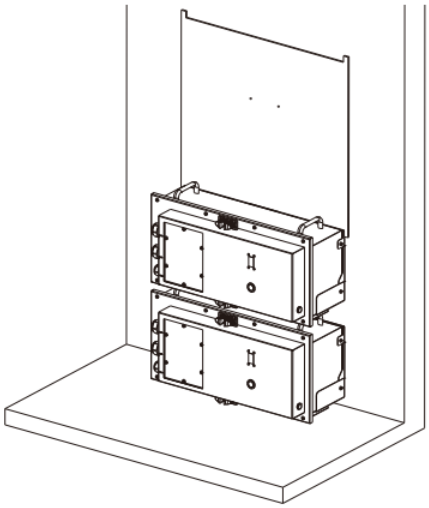

The steps for mounting SMILE5-INV are listed below:
a. Please locate the position plate with 4 positioning pin of the wall panel of the SMILE-Bat series or with the outer shape of the wall bracket of M4856-P, and use a marker to locate the drill positions, then remove the position plate.
b. Drill 6 holes on the wall with Φ10mm drill and insert the screw anchors into the drill holes.
c. Attach the wall bracket to the wall and tighten the provided screws with the tool of SW10 hexagon sleeve.
d. Hold the handles on both sides and hook the inverter into the wall bracket.
e. Tighten the wall bracket and the inverter sides with screw M5*12 (X2) (tool: T20 screwdriver, torque: 2Nm).
f. Attach two holders of SMILE5-INV cable cover to the sides of the bottom of the inverter and tighten them (tool: T20 screwdriver, torque: 2Nm)..

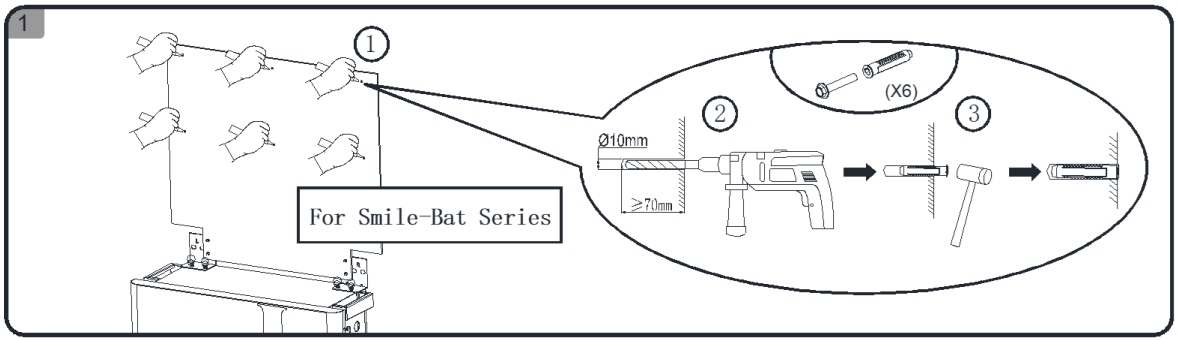

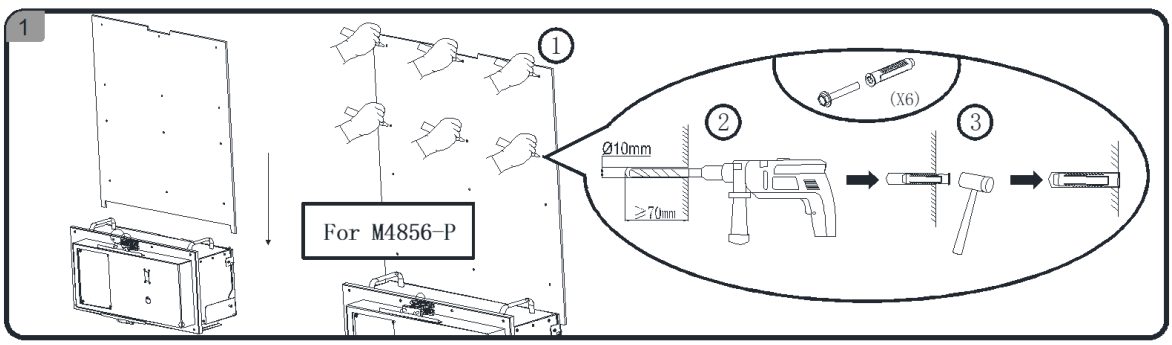

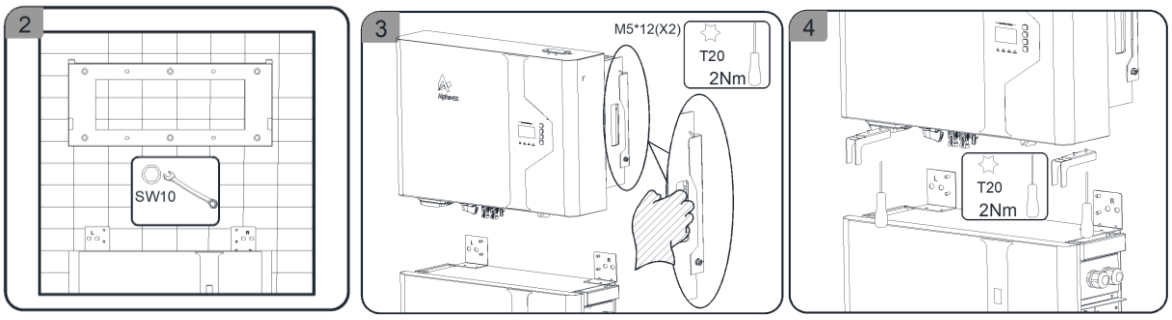

5.5.3. Mounting the WiFi Module

Remove the WiFi cover from the top of the inverter with Torx 20 screwdriver.

Tighten the WiFi module on the top.

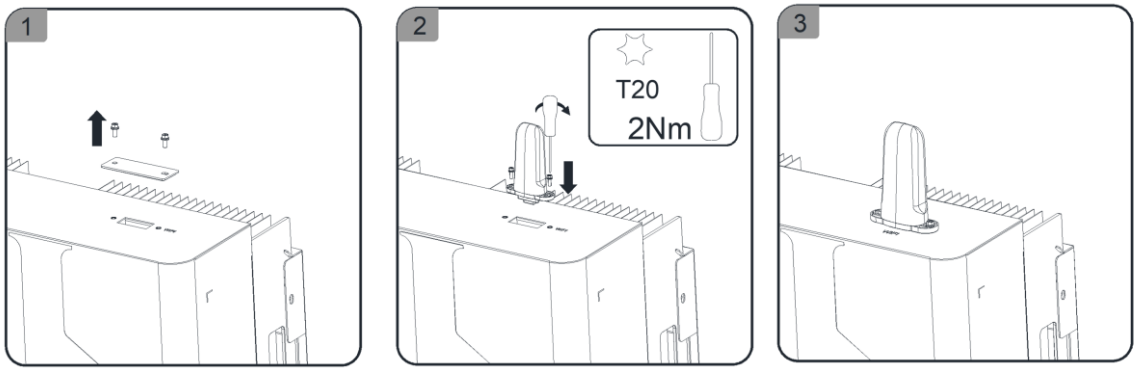

6. Electrical Connection

Precautions

DANGER

Before connecting cables, ensure that all breakers of the inverter and the battery packs and all the switches connected to inverters and the battery packs are set to OFF. Otherwise, the danger voltage of the energy storage system may result in electric shocks.

WARNING

- The energy storage system damage caused by incorrect cable connections is not covered under any warranty.
- Only certified electricians are allowed to connect cables.
- Operation personnel must wear proper PPE when connecting cables.

NOTICE

The cable colors shown in the electrical connection diagrams provided in this chapter are for reference only.
Select cables in accordance with local cable specifications (green-and-yellow cables are only used for PE).

6.1. Cable Requirements for Connection

No.	Cable	Type	Conductor Cross Section Area Range	Outer Diameter	Source
1	Battery power cable	Standard PV cable in the industry (recommended type: PV1-F)	25mm^2	N/A	Delivered with the battery
2	Battery communication cable	Standard network cable in the industry (recommended type: Cat5e, UTP, UV-resistant for outdoor use)	0.12 ~ 0.2 mm^2 (AWG26~AWG24)	N/A	Delivered with the battery
3※1	Signal cable	Standard network cable in the industry (recommended type: Cat5e, FTP, UV-resistant for outdoor use)	0.12 ~ 0.2 mm^2 (AWG26~AWG24)	N/A	Delivered with the inverter
4	PV power cable	Standard PV cable in the industry (recommended type: PV1-F)	4~6 mm^2	5.5 ~ 9 mm	Purchased by the installer
5※2	Signal cable	Standard network cable in the industry (recommended type: Cat5e, FTP, UV-resistant for outdoor use)	0.12 ~ 0.2 mm^2 (AWG26~AWG24)	4~6 mm	Purchased by the installer
6※3	Signal cable	Multiple-core outdoor shielded twisted pair cable	0.1 ~ 1.3 mm^2	4~6 mm	Purchased by the installer
7	AC power cable for backup	Three-core (L, N and PE) outdoor copper cable	4 ~ 6 mm^2	10 ~ 14 mm	Purchased by the installer
8	AC power cable for grid	Three-core (L, N and PE) outdoor copper cable	4 ~ 6 mm^2	12 ~ 18 mm	Purchased by the installer
9	PE cable	Single-core outdoor copper cable	6 ~ 10 mm^2	N/A	Purchased by the installer

※1 For CT communication connection with inverter.

※2 For CAN/RS485, LAN, Meter, DRM communication connection with inverter.

※3 For AUX communication connection with inverter.

6.2. Connecting Additional Grounding

NOTE

Electric shock hazard
Before doing electrical connection, please ensure the PV switch & all AC and BAT circuit breakers in the energy storage system are switched OFF and cannot be reactivated.

An external grounding bar is provided at the bottom of the SMILE5-INV.
Prepare M5 OT terminals, strip the grounding cable insulation, insert the stripped part of the grounding cable into the ring terminal lug and crimp using a crimping tool.
Connect the OT terminal to ground bar using the torque is 2.5 Nm with T20 screwdriver.

Additional grounding connection for SMILE5-INV

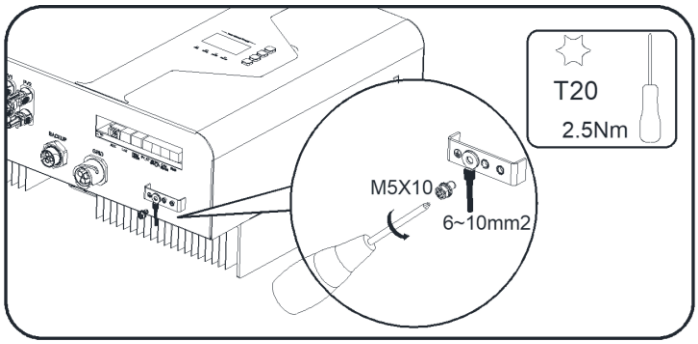

Grounding connection between inverter SMILE5-INV and battery SMILE-Bat series.

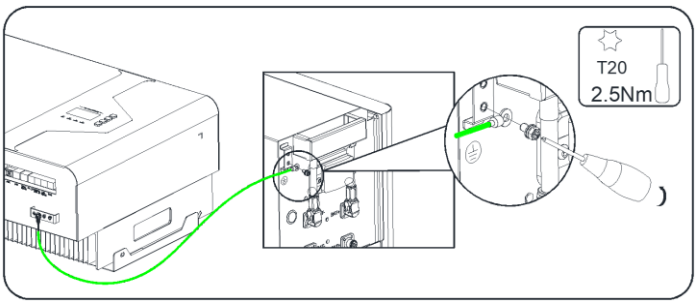

Grounding connection between inverter SMILE5-INV and battery M4856-P.

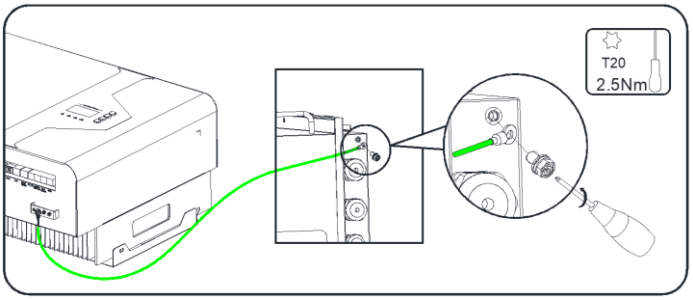

6.3. AC Connection

6.3.1. Requirements for the AC Connection

AC cable requirements as follows:
☐ Conductor type: copper wire
☐ External diameter: 12 mm to 18 mm for grid connector, 10 mm to 14 mm for backup connector,
☐ Conductor cross-section recommendation: 6 mm^2
☐ Insulation stripping length: 10 mm
☐ Sheath stripping length: 50 mm

NOTE

Residual-current monitoring unit:
The inverter does not require an external residual-current device when operating. If local regulations require the use of a residual-current device, or Hybrid-coupled storage system with big coupling capacity from the PV array and PV inverter, the following must be observed:
The inverter is compatible with type A residual-current devices with a rated residual current of 100 mA or higher. Each inverter in the system must be connected to the utility grid via a separate residual-current device.

DANGER

You must protect each inverter with an individual grid/backup circuit breaker in order to ensure that the inverter can be disconnected safely.

NOTE

For Australia and New Zealand installation site, the neutral cable of grid side and backup side must be connected together, otherwise backup output function will not work.

Description	Max. Current	Breaker Type for SMILE5-INV
Grid Side	32.6A	40A
Backup Side	21.7A	32A

6.3.2. Grid and Backup Connection

The steps for connecting the grid and backup connector as follows:
1. Disconnect the circuit breakers and secure it against reconnection.
2. Dismantle the AC cable by 50 mm.
3. Shorten L and N by 5 mm each, so that the grounding conductor is 5 mm longer. This ensures that the grounding conductor is the last to be pulled from the screw terminal in the event of tensile strain.
4. Strip the insulation of L, N and the grounding conductor 10 mm.
5. In the case of fine stranded wire L, N and PE are to be fitted with bootlace ferrules.
6. Disassemble the AC connector and connect the conductors to the AC connector.
7. Ensure that all conductors are securely connected to the AC connector, assemble the AC connector.
8. Plug the AC connector into the socket for the AC connection.
When doing so, align the AC connector so that the key on the SMILE5-INV AC socket is inserted into the keyway on the AC connector bush insert.

For grid connector, still need to turn the grid connector slightly clockwise until you hear a "click" sound.

Installation steps for grid side

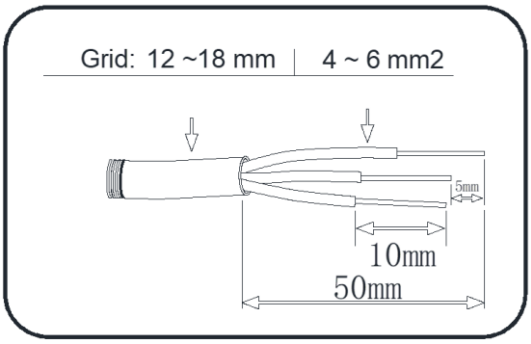

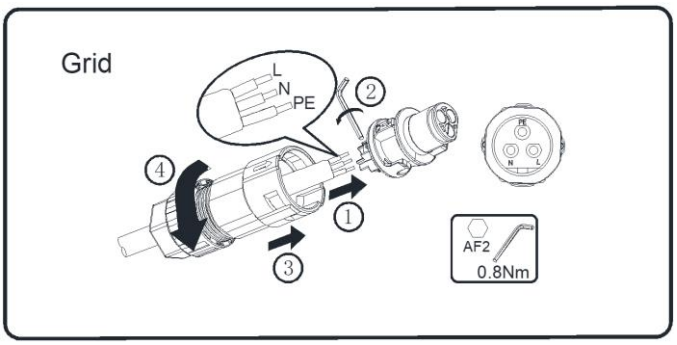

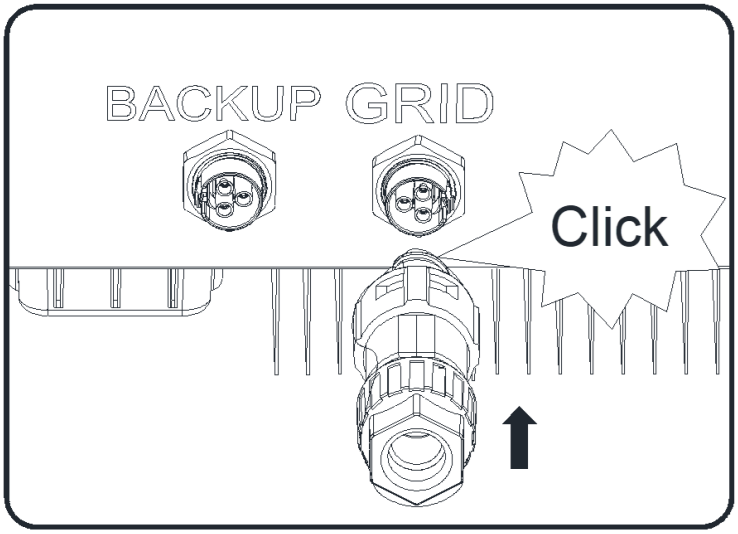

Installation steps for backup side

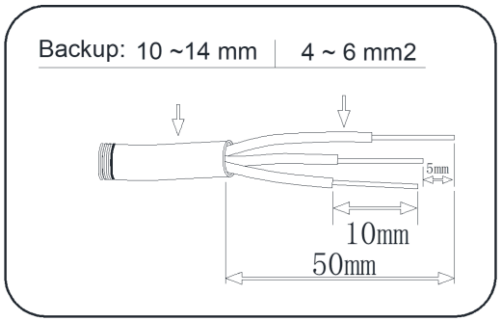

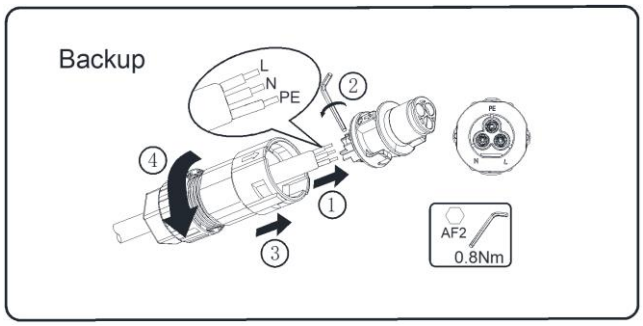

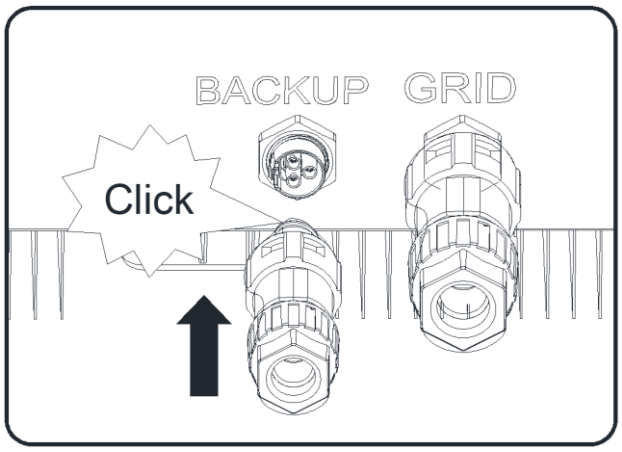

PS: Follow-up steps for disassembling the AC connector:

To disassemble the backup connectors from the SMILE5-INV.
1、Unscrew the backup connector counterclockwise until it can't be rotated.
2、Take out the slotted screwdriver and insert the its blade into the slot of the AC connector and unplug it.

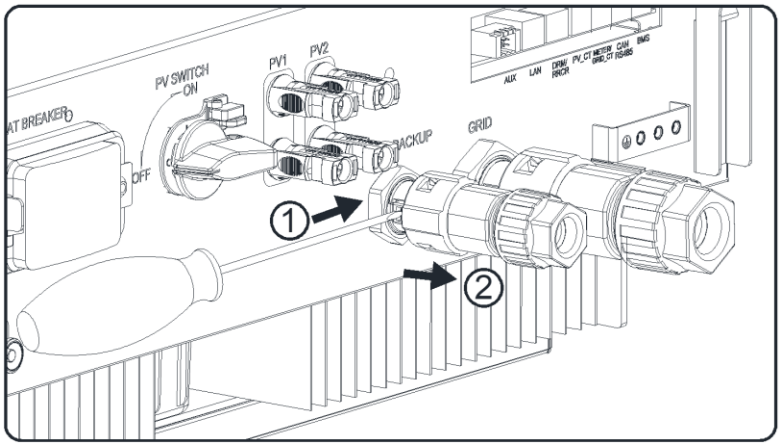

To disassemble the grid connectors from the SMILE5-INV, unscrew the grid connector counterclockwise until it can't be rotated and unplug it.

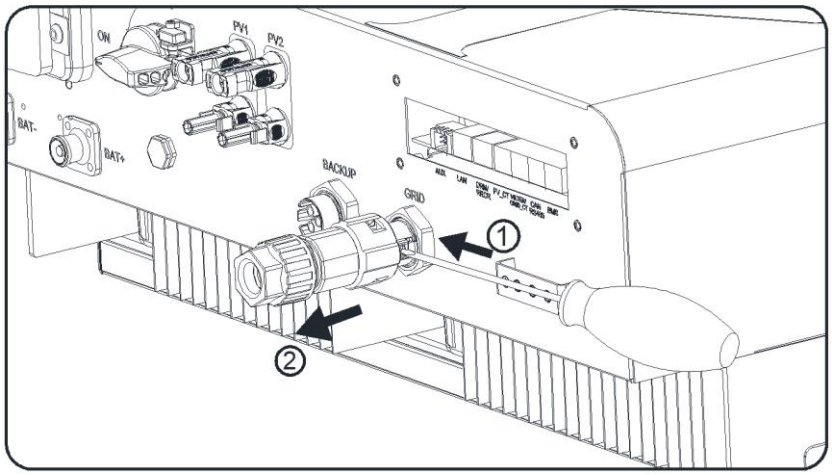

6.4. CT Connection & Electricity Meter Connection

Item	Current	Scenarios
CT	100A	CT
DTSU666-3*230V 5(80)A	80A	Three phase meter (without CT)
DTSU666-3*230V 100A/40mA	100A	Three phase meter (with CT)
DTSU666-3*230V 250A/50mA	250A	Three phase meter (with CT)

Loosen the swivel nuts of the cable glands on the COM connection cover of SMILE5-INV, and unscrew the 4 screws on the corners, then you will see the grid CT, PV CT and meter communication ports.

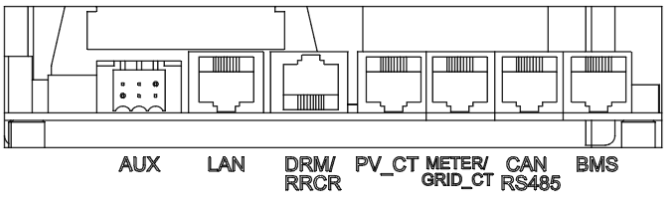

6.4.1. CT Connection

There are Grid CT & cable as accessory for SMILE5-INV.
For hybrid or AC-coupled storage system application, installer need purchase a PV CT & cable.

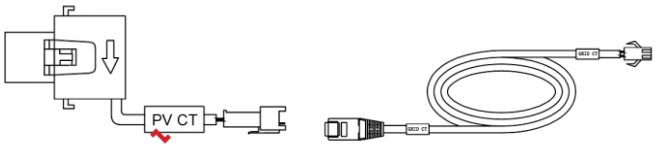

Please take out CT(s) from the package.
Step 1: Lead the CT cable through the cable gland of the COM connection cover, don't tighten the swivel nuts of the cable glands.

Insert the RJ45 plugs to the relative RJ45 sockets.

Step 2: Buckle the magnetic buckle of the Grid CT on the house-service live cable. The arrow on the magnetic buckle of the Grid CT should point to the Grid port of SMILE-S5/B5.

Step 3: For hybrid or AC-coupled storage system application, buckle the magnetic buckle of the PV CT on the live cable of the installed PV inverter. The arrow on the magnetic buckle of the PV CT should point to the mains grid.

Step 3: Connect the CT cables to the Grid CT and PV CT respectively.

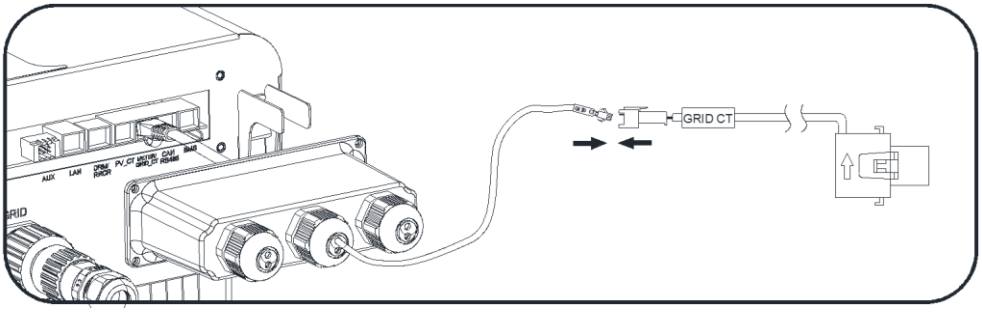

NOTE

The CT cable marked Grid CT should be connected to the Grid CT, and the CT cable marked PV CT should be connected to the PV CT.

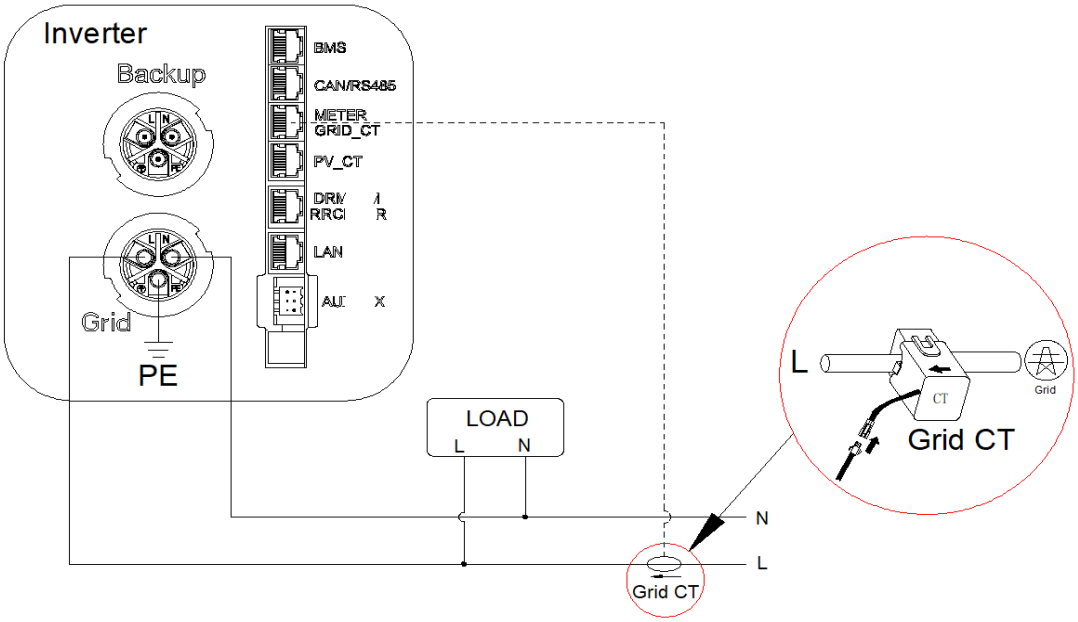

DC-coupled Storage System

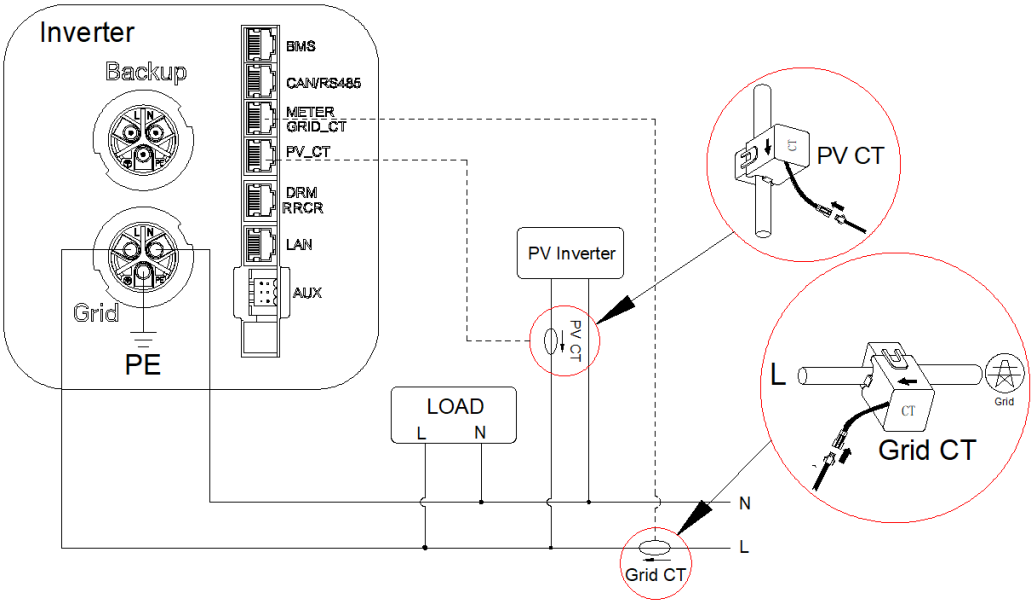

AC-coupled Storage System and Hybrid-coupled Storage System

6.4.2. Chint Meter Connection

Lead the meter cable through the cable gland of the COM connection cover, don't tighten the swivel nuts of the cable glands.
Insert the RJ45 plugs to the meter communication port.
The other steps for meter connection as follows:
1. DSTU666-3*230V 5(80)A: Three phase meter (without CT) connection

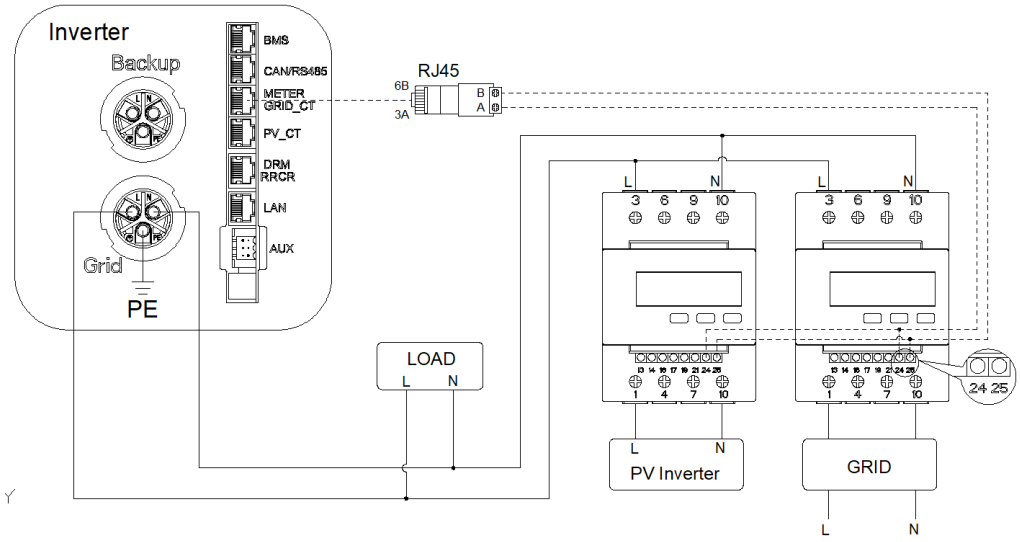

Wiring at single-phase feed in

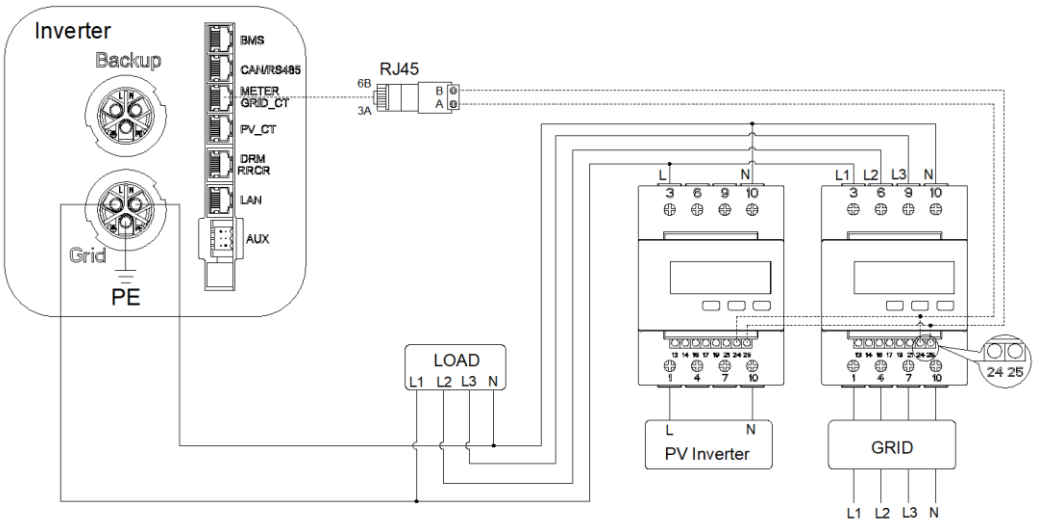

Wiring at three-phase feed in

2. DSTU666-3*230V 100A/40mA, DTSU666-3*230V 250A/50mA: Three phase meter (with CT) connection

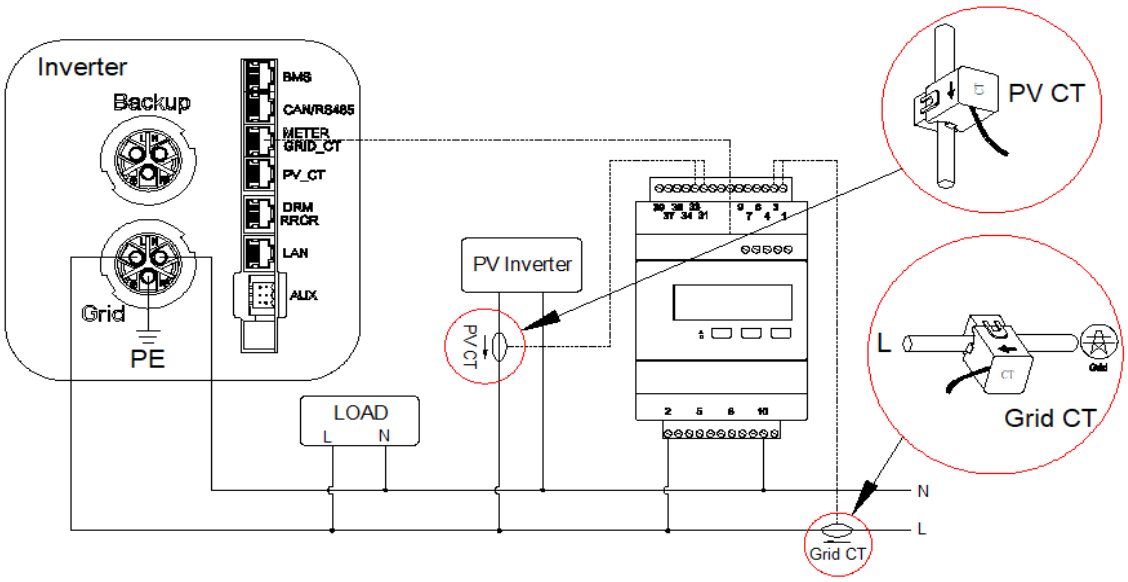

Wiring at single-phase feed in

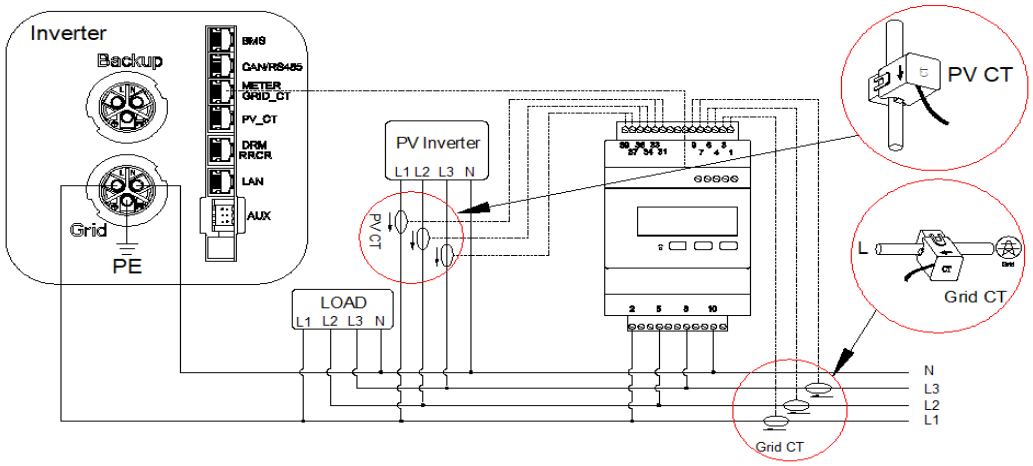

Wiring at three-phase feed in

Grid CT	PV CT	GRID
1--------IC (White)	31--------IC (White)	2----------L1
3--------IC (Blue)	33--------IC (Blue)	5----------L2
4--------IB (White)	34--------IB (White)	8----------L3
6--------IB (Blue)	36--------IB (Blue)	10-------- N
7--------IA (White)	37--------IA (White)	
9--------IA (Blue)	39--------IA (Blue)	

6.4.3. Configuring the Chint Meter

Model	Grid Meter Address	PV Meter Address
DTSU666-3*230V 5(80)A (without CT)	1	2
DTSU666-3*230V 100A/40mA (with CT)	1	N/A
DTSU666-3*230V 250A/50mA (with CT)	1	N/A

1.DTSU666-3*230V 5(80)A: Three-phase meter (without CT)

When the meter is used as Grid meter, please follow the steps below to complete the address setting.

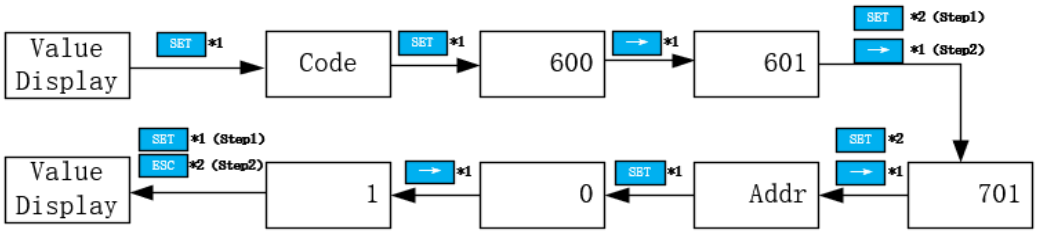

When the meter is used as PV meter, please follow the steps below to complete the address setting.

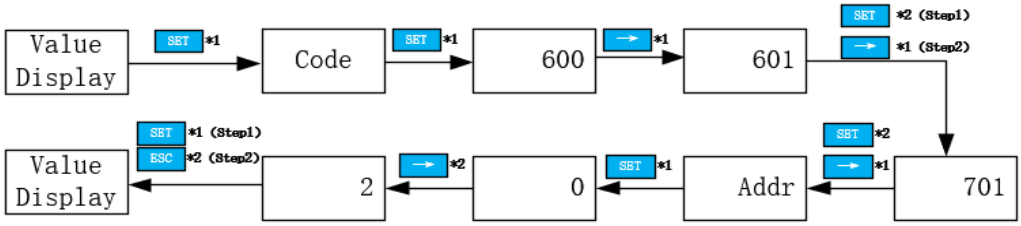

2.DTSU666-3*230V 100A/40mA,DTSU666-3*230V 250A/50mA: Three-phase meter (with CT)

When the meter is used as Grid meter, please follow the steps below to complete the address setting.

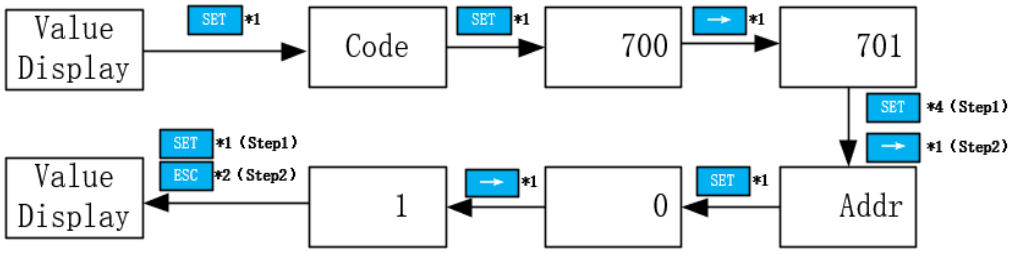

Meter Setting on AlphaCloud

Step 1:

When the system work mode is selected as DC, click the button under the “Grid Meter” to turn the “Meter” icon green.

When the system work mode is selected as AC or Hybrid, click the buttons under the “Grid Meter” and “PV side meter” to turn the “Meter” icon green.

Step 2:

Click "Save" and wait a few minutes to refresh the page.

When the “Meter Model” displays DTSU666 model, the setting is successful.

> **NOTE**
>
> It is forbidden to tick CT to modify the CT ratio.

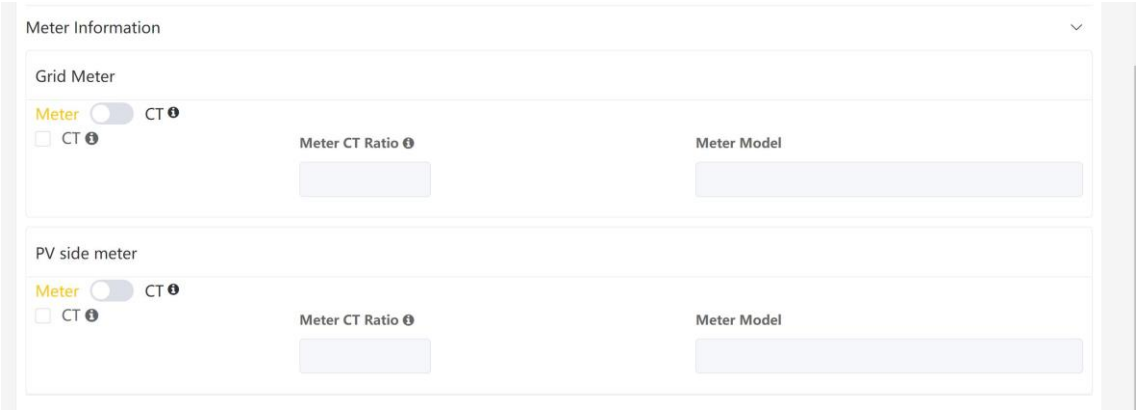

Meter Setting on AlphaAPP

Step 1:

When the system work mode is selected as DC, only tick "Meter" icon on the right of the “Grid Meter”.

When the system work mode is selected as AC or Hybrid, both tick "Meter" icon on the right of the “Grid Meter” and “PV side meter”.

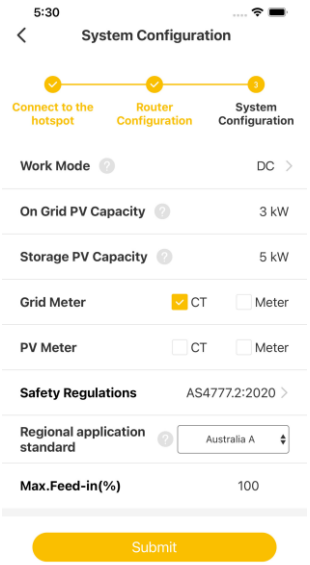

Step 2:

Click "Submit" and enter the “System information” page to check the meter model. When the “Meter Model” displays DTSU666 model, the setting is successful.

NOTE

It is forbidden to tick CT to modify the CT ratio.

6.4.4. Acrel Meter Connection

The electricity meter should be mounted and connected at the grid transition point (feed-in point) so that it can measure the grid reference and feed-in power. Alpha ESS currently provides 4 different power meter solutions:

- **ADL-3000: three-/ single-phase meter (without CT)**
- **SM60A: single-phase meter**
- **Backup Box: three-/ single-phase meter (Contain off-grid switching and load management)**
- **ACR10R: Three-phase CT electric meter**

Table 1 CT meter ratio and accuracy table

Model	CT Ratio	Accuracy
ACR10R-120A CT	120	1.2kWh
ACR10R-120A CT	200	2.0kWh
ADL3000-N/CT & 400A/1A CT	400	4.0kWh
ADL3000-N/CT & 400A/1A CT	80	0.8kWh
ADL3000-N/CT & 400A/1A CT	60	0.6kWh

6.4.4.1 Meter SM60A (If Applicable)

6.4.4.1.1 SM60A connect (with meter plug), if applicable:

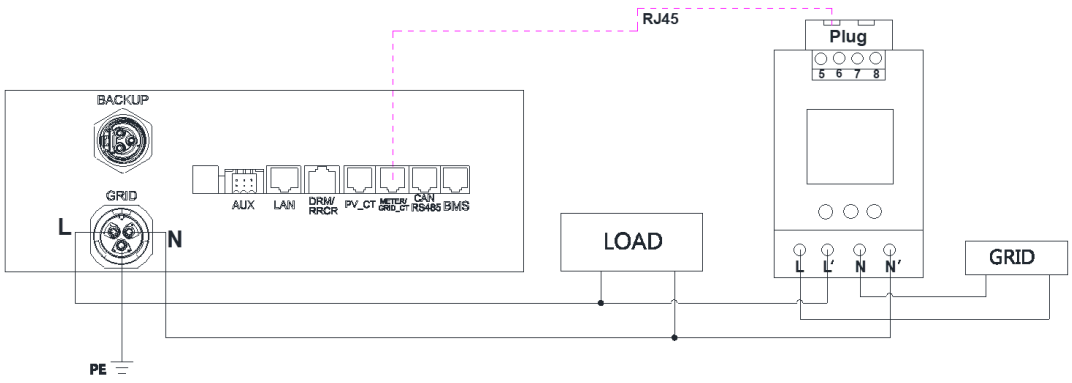

SM60A connect (with meter plug)

6.4.4.1.2 SM60A connect (with meter plug), if applicable:

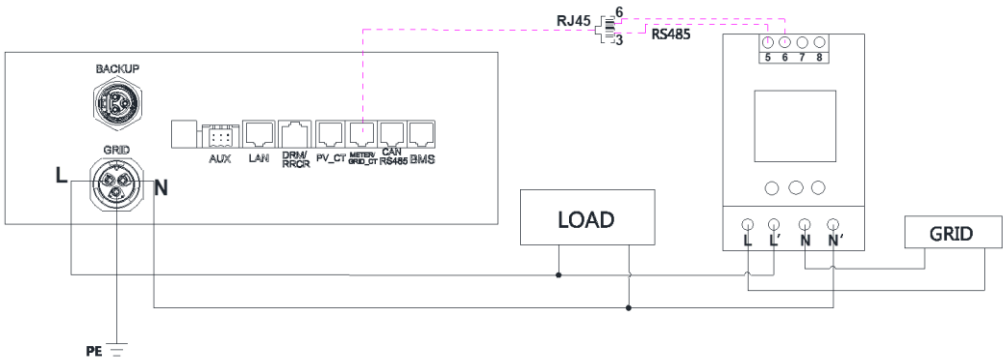

SM60A connect (without meter plug)

> **NOTE**
>
> Connect the power meter （PIN 5，6）to the meter port（PIN 3，6）using the RJ45 cable.

For AC/Hybrid system, there are two meters needed:

Option 1: with Meter Plug

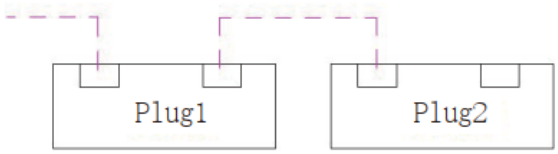

Option 2: without Meter Plug

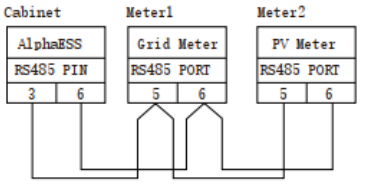

6.4.4.2 Meter ADL-3000 (If Applicable)

6.4.4.2.1 Single-phase in house

ADL-3000 single-phase connection (without CT, without meter plug), if applicable:

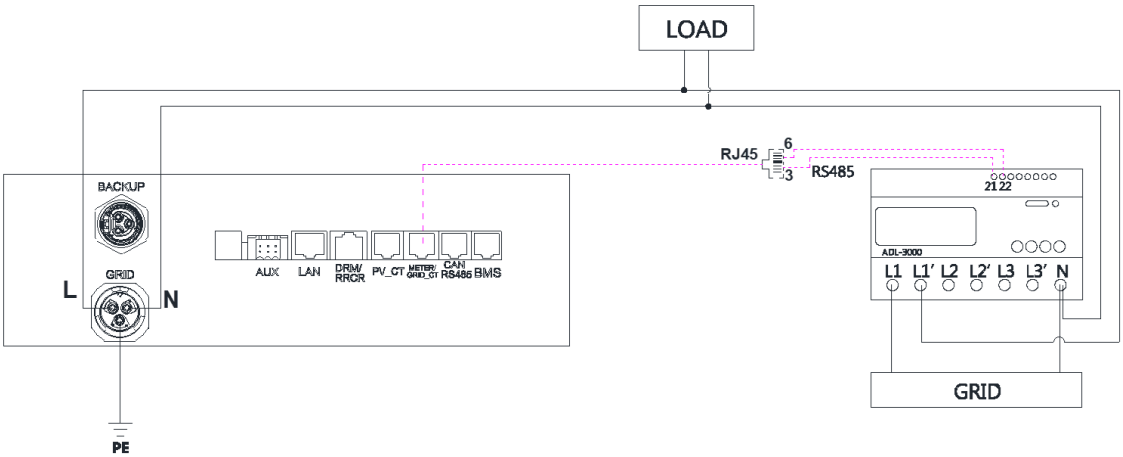

ADl-3000 single-phase Connect (with CT, without Meter Plug

NOTE

Connect the power meter （PIN 7,8）to the meter port (PIN 3,6) using the RJ45 cable.

ADL-3000 single-phase connection (without CT, with meter plug), if applicable:

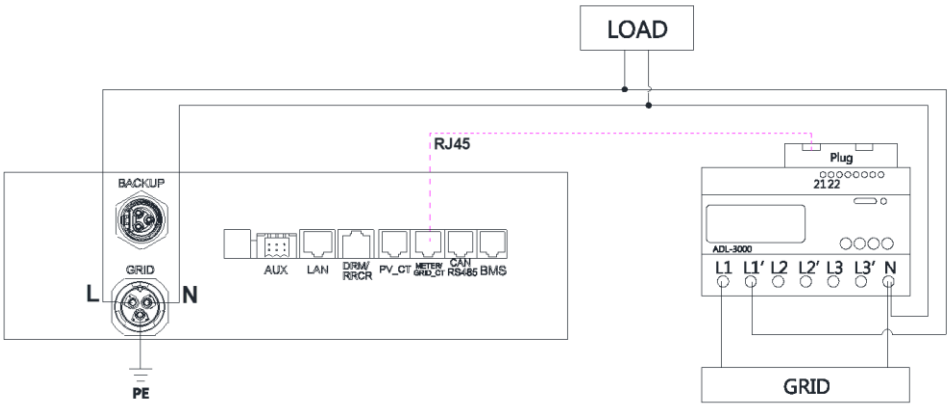

ADL-3000 single-phases Connect (without CT, with Meter plug)

ADL-3000 single-phase connection (with CT, without meter plug), if applicable:

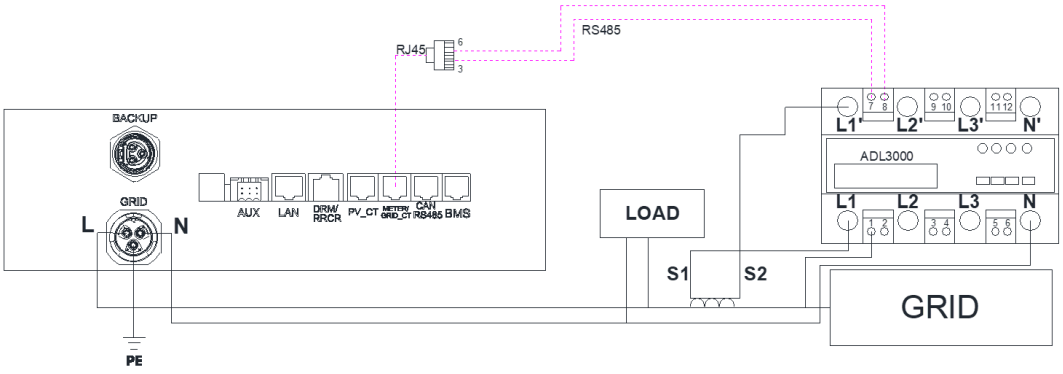

ADL-3000 single-phase Connect (with CT, without Meter plug)

NOTE

Connect the power meter （PIN 7,8）to the meter port (PIN 3,6) using the RJ45 cable.

ADL-3000 single-phase connection (with CT, meter plug), if applicable:

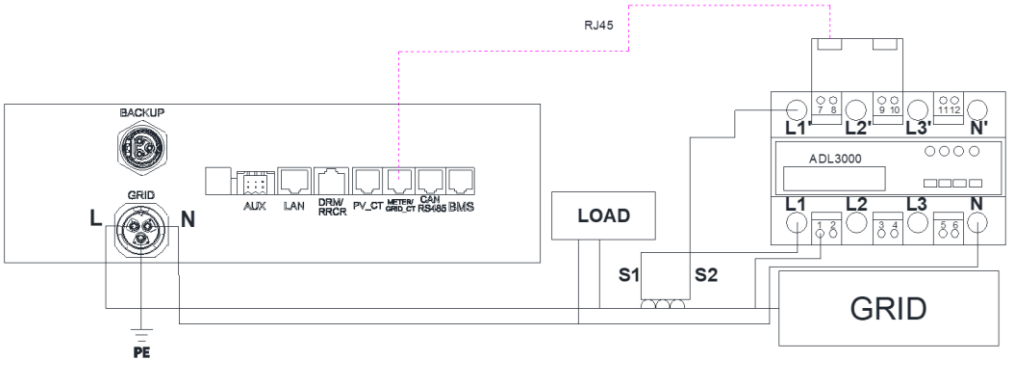

ADL-3000 single-phase Connect (with CT, with Meter plug)

6.4.4.2.2 Three-phase in house

ADL-3000 three-phase connection (without CT, without meter plug), if applicable:

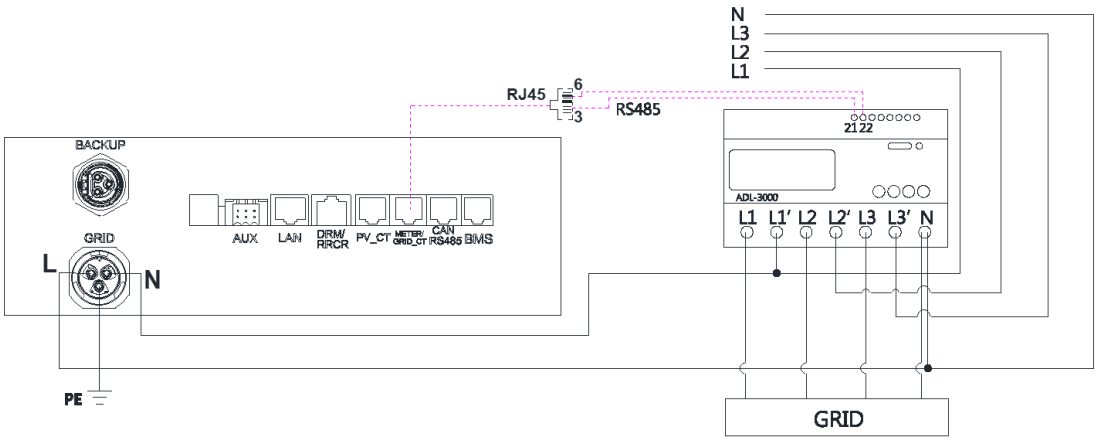

ADL-3000 three-phase Connect (without CT, withouut Meter plug)

> **NOTE**
>
> Connect the power meter （PIN 7,8）to the meter port (PIN 3,6) using the RJ45 cable.

ADL-3000 three-phase connection (without CT, with meter plug), if applicable:

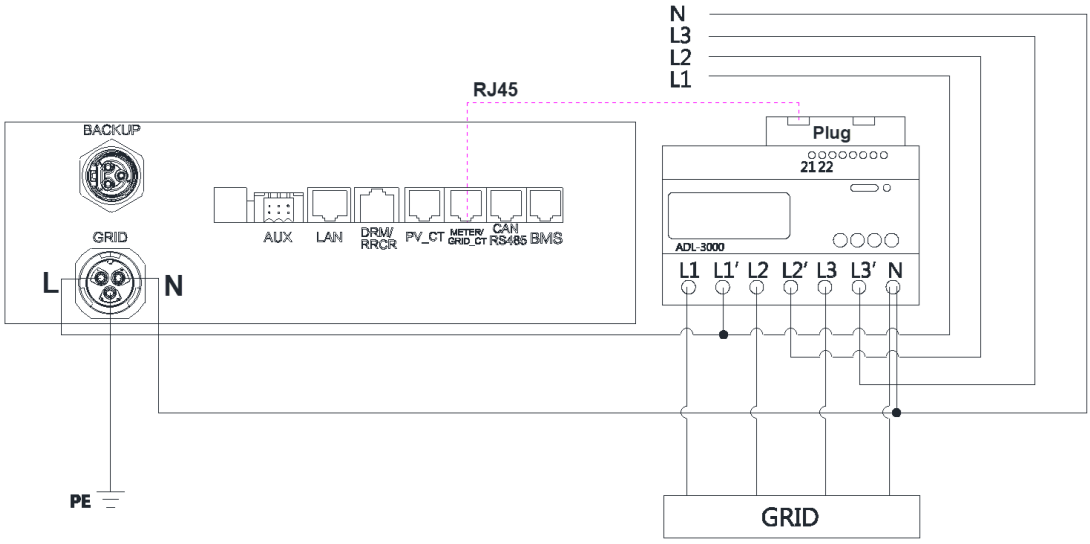

ADL-3000 three-phase Connect (without CT, with Meter plug)

ADL-3000 three-phase connection (with CT, without meter plug), if applicable:

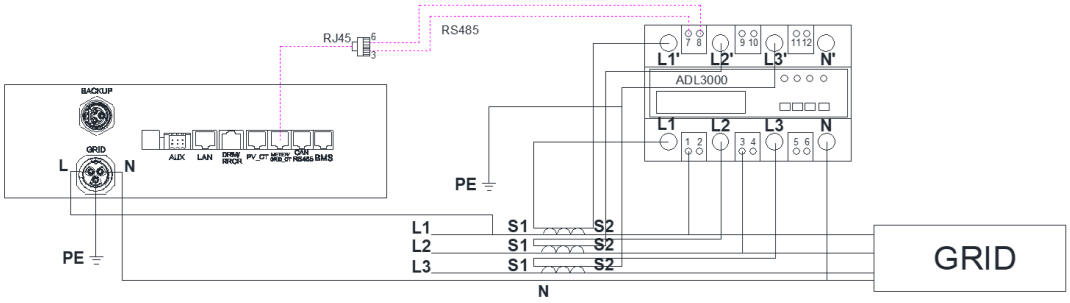

ADL-3000 three-phase Connect (with CT, without Meter plug)

NOTE

Connect the power meter （PIN 7,8）to the meter port (PIN 3,6) using.

ADL-3000 three-phase connection (without CT, with meter plug), if applicable:

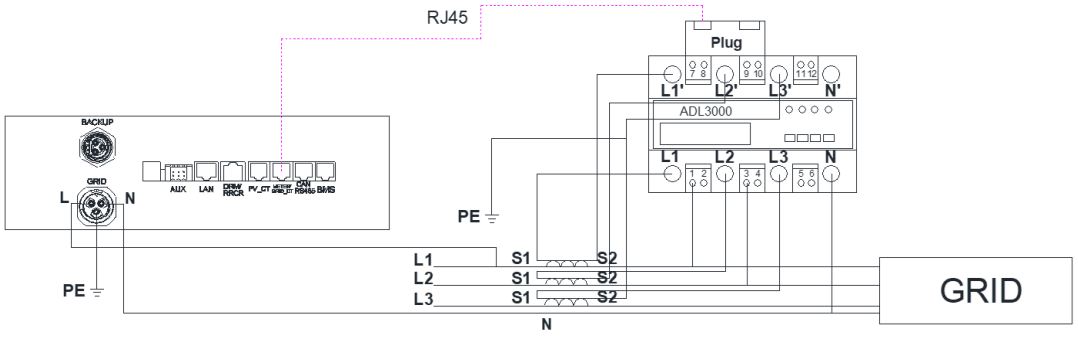

ADL-3000 three-phase Connect (with CT, with Meter plug)

> **NOTE**
>
> To connect the current transformer, connect S1 to L1 and S2 to L1'.

For AC-/ Hybrid-system, there are two meters needed:

Option 1: with Meter Plug

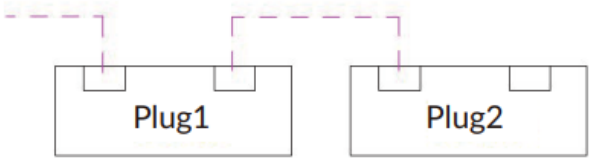

Option 2: without Meter Plug

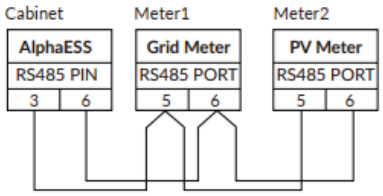

> **NOTE**
>
> If the ADL3000 meter with CT is used as a grid meter, the direction of arrow in CT should point to the energy storage system instead of the grid.
>
> If the ADL3000 meter with CT is used as a PV meter in AC- or hybrid-coupled system, the direction of arrow in CT should point to the energy storage system instead of the PV inverter.

6.4.4.3 ACR10R Meter (if applicable)

6.4.4.3.1 DC-Coupled System

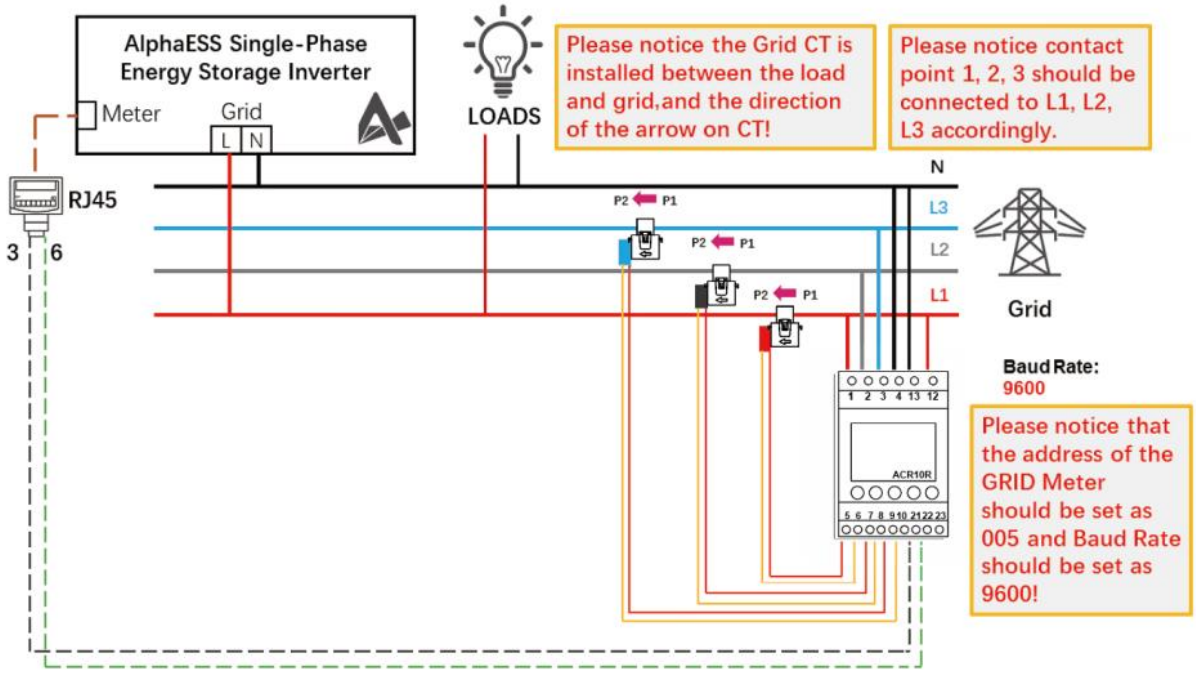

ACR10R three-phase Connection (DC-Coupled System)

6.4.4.3.2 AC- or Hybrid-Coupled System

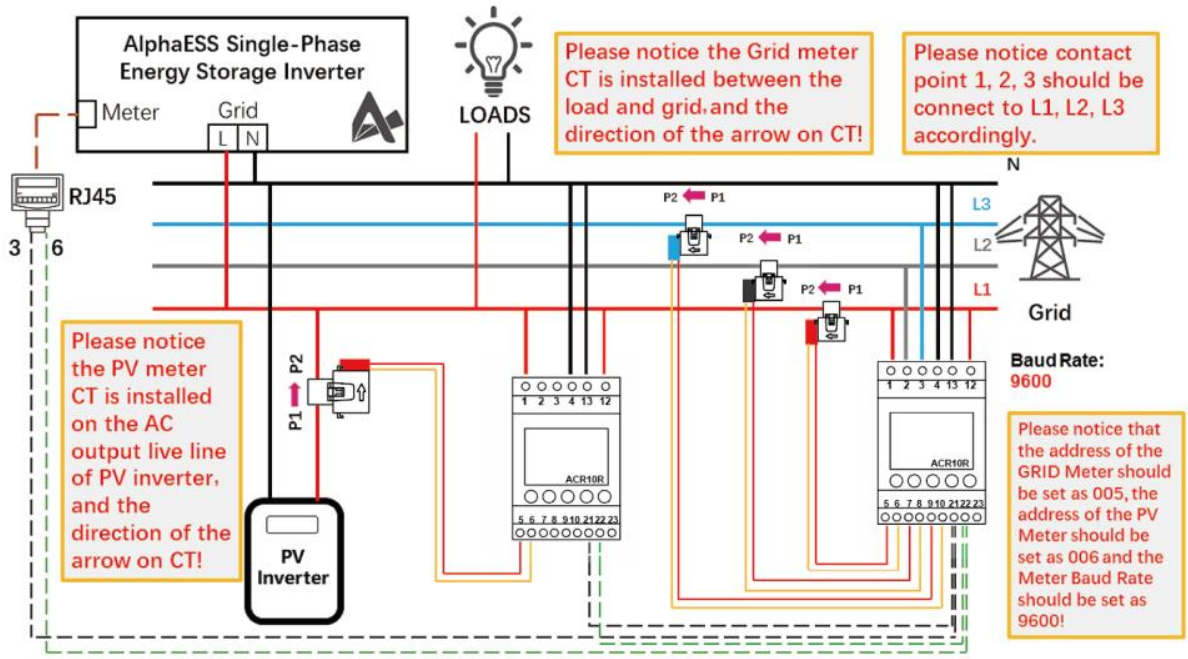

ACR10R three-phase Connection (AC- or Hybrid-Coupled System)

NOTE

Connect the power meter (PIN 21, 22) to the meter port of the cable box (PIN 3, 6) using the Rj45 cable.

For AC/Hybrid system, there are two meters needed:

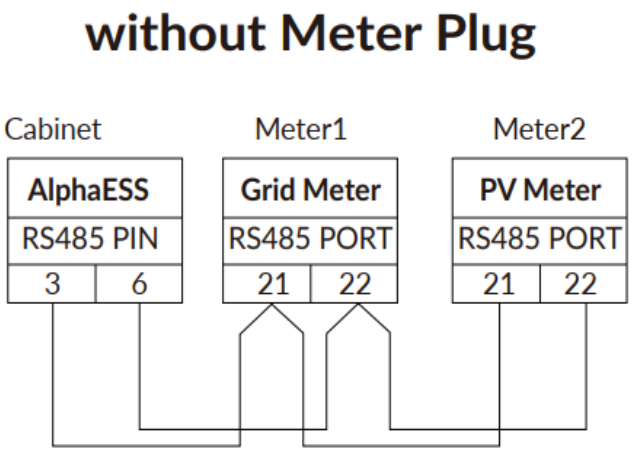

If the ACR10 meter is used as a grid meter, the direction of arrow in CT should point to the energy storage system instead of the grid.

If the ACR10R meter is used as a PV meter in hybrid system, the direction of arrow in CT should point to the energy storage system instead of the PV inverter.

6.4.4.4 Meter setting

6.4.4.4.1 SM60A

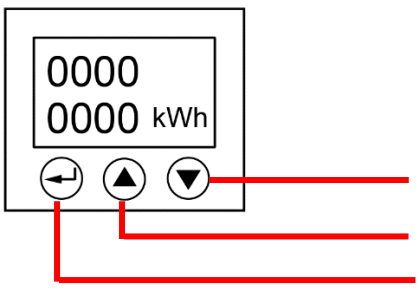

There are 3 buttons on the front of the electricity meter:

1. Down arrow: shift button
2. Up arrow: value adjustion
3. Enter button / Menu button

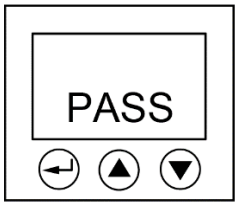

Step 1: Click the “Enter” button to enter the menu interface.

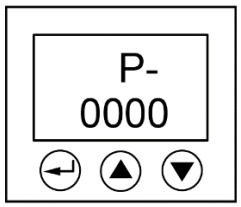

Step 2: Click the “Enter” button to input the password. The initial password is 0000. Then click the “Enter” button.

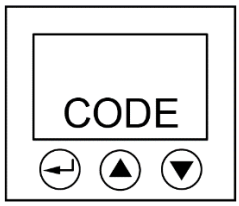

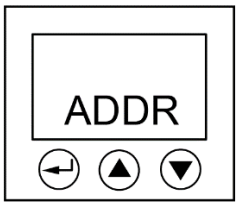

Step 3: You will get into the code interface. Then click the “Shift” button to enter the adress interface.

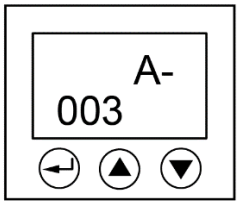

Step 4: Please set the meter address by using the “Value adjustion” button, the Grid meter (DC, AC and Hybrid system) address is set to 003, and the PV meter (AC and Hybrid system) address is set to 004.

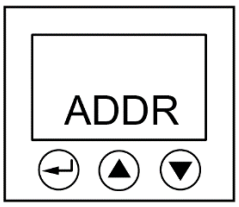

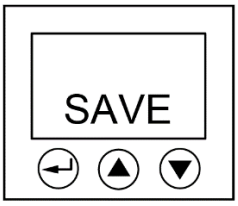

Step 5: Click the “Enter” button to get back to the menu interface. Then click the “Shift” button 5 times to enter the save interface.

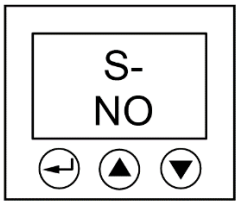

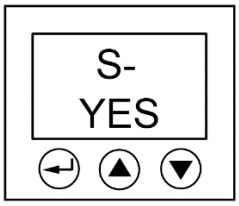

Step 6: Click the “Shift” button to save the setting.

6.4.4.4.2 ADL3000

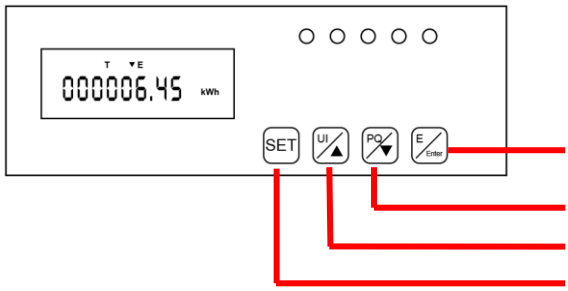

There are 4 buttons on the front of the electricity meter:

1. Enter button / Energy button
2. Down arrow / Power button
3. Up arrow / Voltage & current button
4. SET button

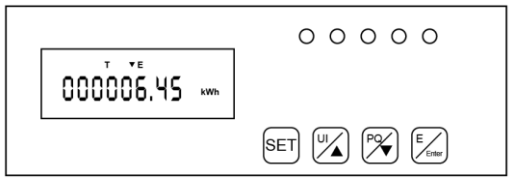

Step 1: The initial interface of the meter (normal working mode) is shown above.

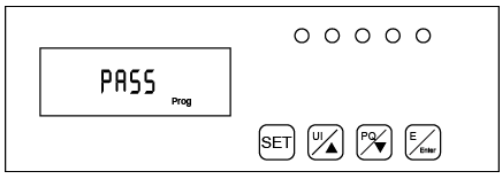

Step 2: Click the “SET” button to enter the password interface

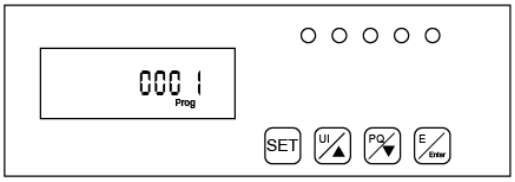

Step 3: Click the "Enter" button to enter the above interface, and press the up and down arrow keys to enter the password 0001.

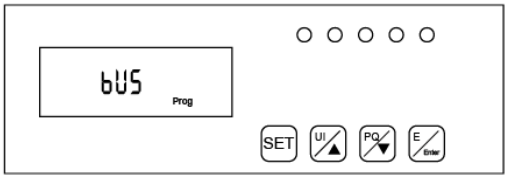

Step 4: Click the "Enter" button and the password input is completed.

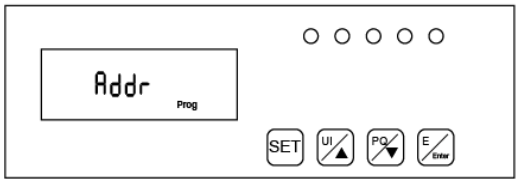

Step 5: Click the “Enter” button again to enter the address interface

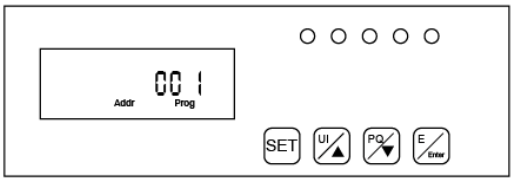

Step 6: Click the “Enter” button and press the up and down arrow keys to set the meter address. The Grid meter (DC, AC and Hybrid system) address is set to 001, the PV meter (AC and Hybrid system) address is set to 002.

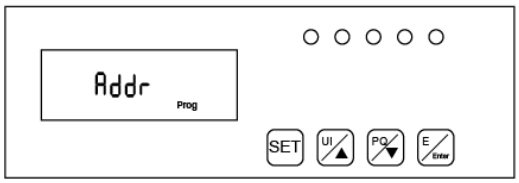

Step 7: Click the "Enter" button and the address setting is completed.

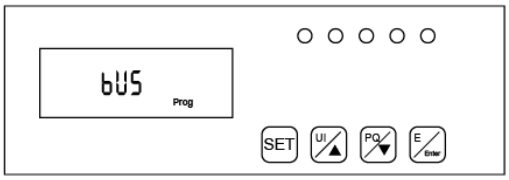

Step 8: Click the “SET” button to enter the following interface

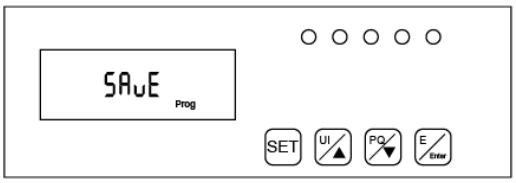

Step 9: Click the “SET” button again to enter the save interface

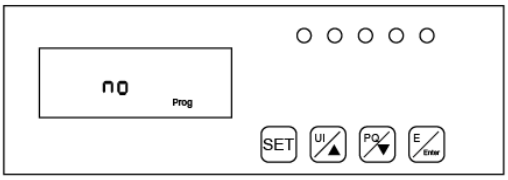

Step 10: Click the “Enter” button to enter the following interface, press the up and down arrow keys, and set “no” to “YES” to save the configuration.

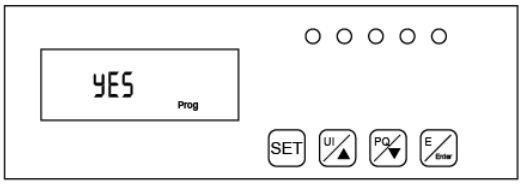

Step 11: Click the "Enter" button and the setting ends.

6.4.4.4.3 ACR10R

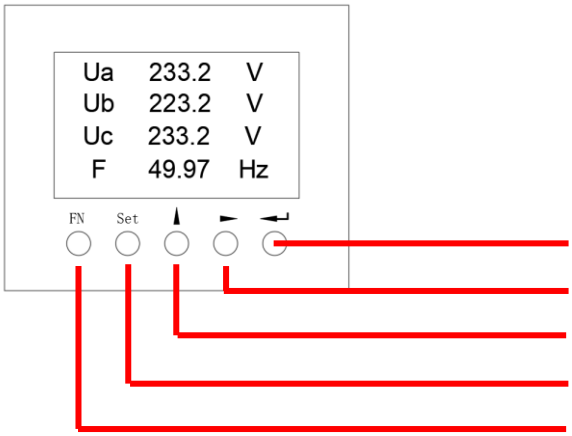

There are 5 buttons on the meter's front:

1. Enter key
2. Arrow to the right
3. Up arrow
4. SET button
5. FN key (no function)

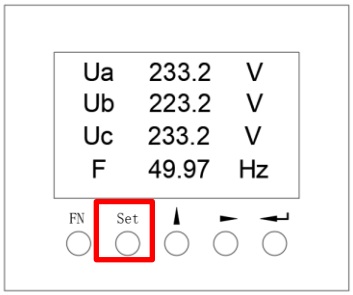

Step 1: Activate the meter display by pressing any key. Then click the "Set" button.

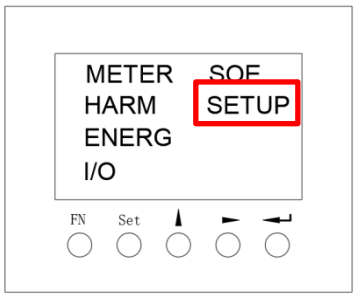

Step 2: Use the arrow keys to select the "SETUP" menu item and confirm your selection with the Enter key.

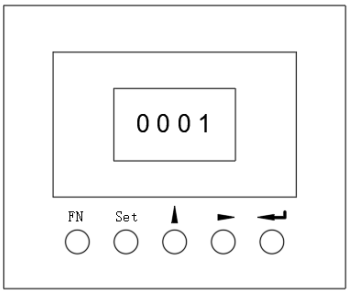

Step 3: Enter the password "0001" and confirm the entry by pressing the Enter key.

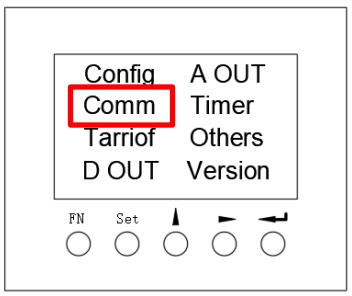

Step 4: Select the menu item "Comm" in the settings menu to change to the communication settings.

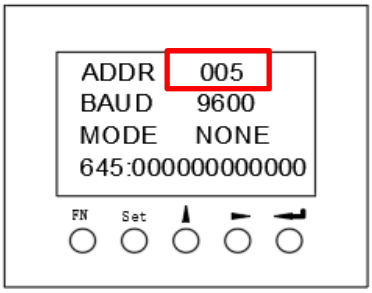

Step 5: Set the communication address and communication baud rate in the communication setting interface. When the meter is used as Grid meter (DC, AC/Hybrid system), the address is set to "005". When it is used as the PV meter (AC/Hybrid system), the address is set to "006". The baud rate is set to 9600.

6.5. PV Connection

Please ensure the follows before connecting PV strings to the SMILE5-INV:

- Make sure the open voltage of the PV strings will not exceed the max. DC input voltage (600Vdc). Violating this condition will void the warranty.
- Make sure the polarity of the PV connectors is correct.
- Make sure the PV-switch, breakers of battery, AC-BACKUP and AC-Grid are all in their off-states.
- Make sure the PV resistance to ground is higher than 200KOhms.

The inverter uses the Vaconn D4 PV connectors. Please follow the picture below to assemble the PV connectors.

PV conductor cross section requirements: 4~6 mm^2

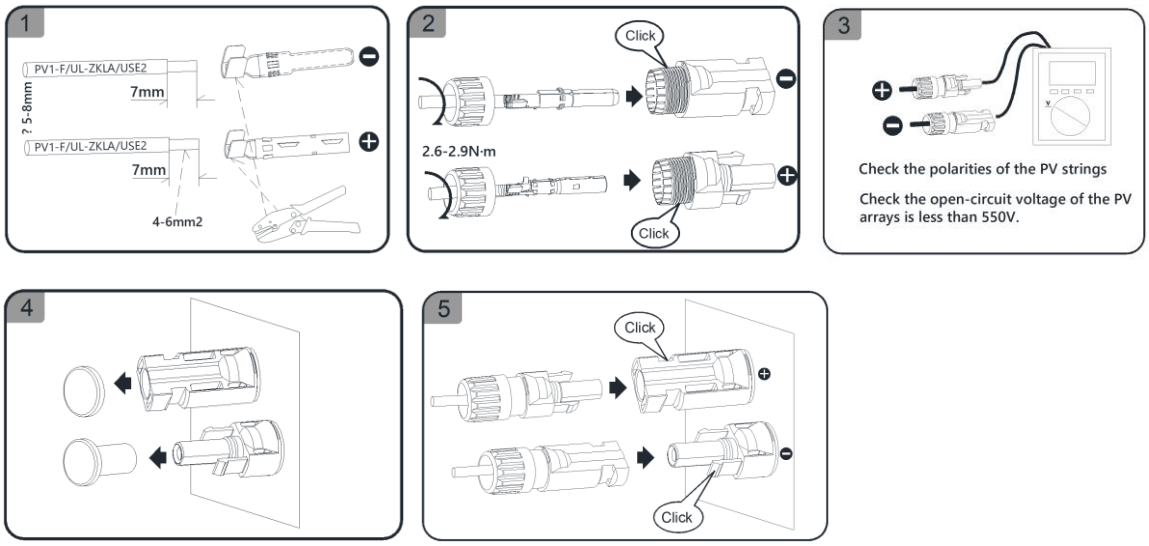

6.6. Electrical Connection Between the Inverter and Battery Packs

6.6.1. Electrical Connection Between the Inverter and SMILE-Bat series

Communication cable connection:
a. Take out the battery communication cable from the battery package
b. Lead the battery communication cable through the cable gland of the COM connection cover of SMILE5-INV, don't tighten the swivel nuts of the cable glands, insert the RJ45 plugs to the BMS communication port.
c. The battery communication ports of SMILE-Bat series are at the top right of the battery, unscrew the 6 screws of the communication panel and remove it.
d. Loosen the swivel nut of the cable gland on the battery communication panel, lead the battery communication cable through the cable gland, insert the RJ45 plugs to the BMS communication port of SMILE-Bat series.
e.Tighten the 6 screws of the communication panel, then tighten swivel nut of the cable gland.

Power cable connection:
a. Take out the battery power cables from the battery package.
b. Remove the protective caps from the battery power connectors.
c. Connect the battery power cables to the SMILE5-INV and battery packs.
Please pay attention to the cable polarity, red cable is for battery positive.

For electrical connection between multiple battery packs, please follow as above steps.

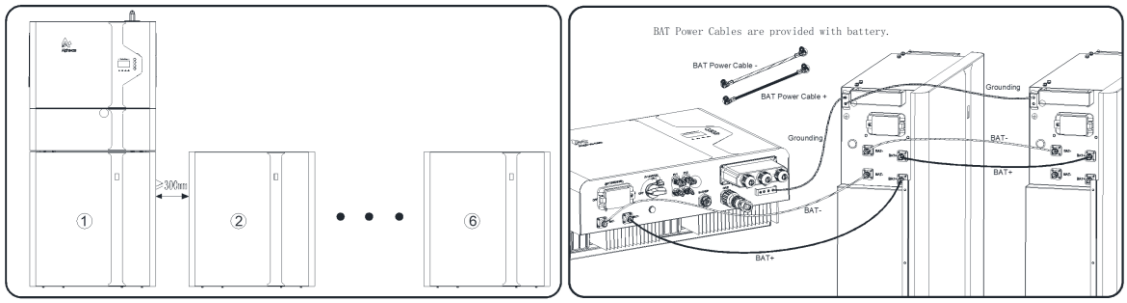

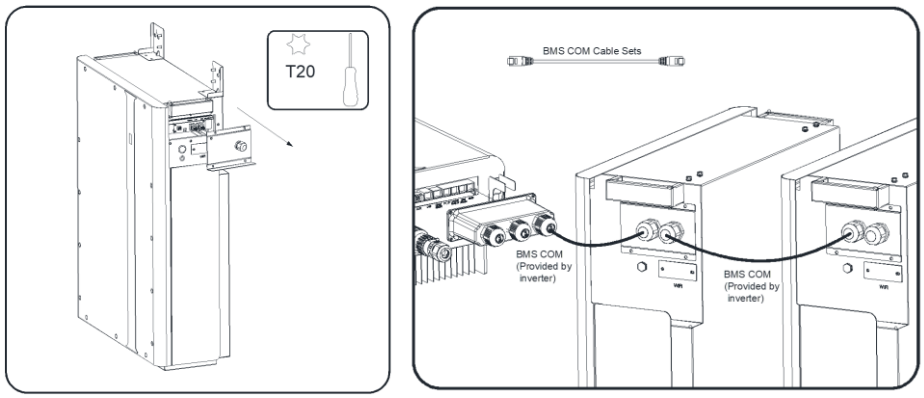

6.6.2. Electrical Connection Between the Inverter and M4856-P

For the electrical connection between the SMILE5-INV and first battery M4856-P, installer need purchase the relative power cables and communication cables.
Communication cable connection:
a. Take out the battery communication cable.
b. Unscrew the 8 screws use T20 screwdriver and remove the maintenance cover of M4856-P. Confirm that the status of circuit breaker is OFF. Please turn it off if it is ON.
c. Lead the battery communication cable through the small cable gland of M4856-P, tighten the swivel nuts of the cable gland, insert the RJ45 plugs to the BMS communication port.
d. Lead the battery communication cable through the cable gland of the COM connection cover of SMILE5-INV, don't tighten the swivel nuts of the cable glands, insert the RJ45 plugs to the BMS communication port.

Power cable connection:
a. Take out the battery power cables.
b. Lead the battery positive and negative power cables through the large one cable gland of M4856-P, use screwdriver PH3 with torque 4Nm to fasten the cable terminals to the terminal blocks.
c. Remove the protective caps from the battery power connectors of SMILE5-INV.
d. Connect the battery power cables to the battery connector of SMILE5-INV
Please pay attention to the cable polarity, red cable is for battery positive.

The M4856-P provides the expansion battery communication cable and power cables. For electrical connection between multiple M4856-P, please follow as above steps.
At last, please switch the circuit breaker of M4856 to on status, tighten the 8 screws of the communication panel of M4856-P.

Cable sets between SMILE5-INV and M4856-P should be purchased separately.
Cable sets for expansion battery installation are provided by M4856-P;

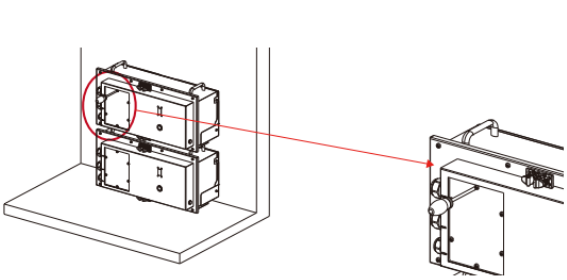

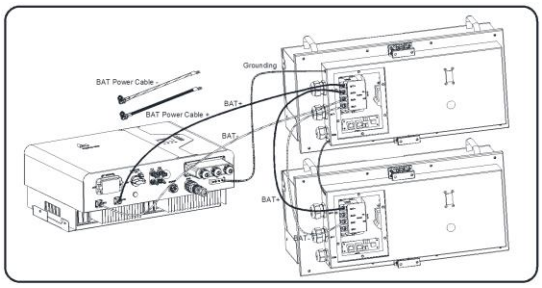

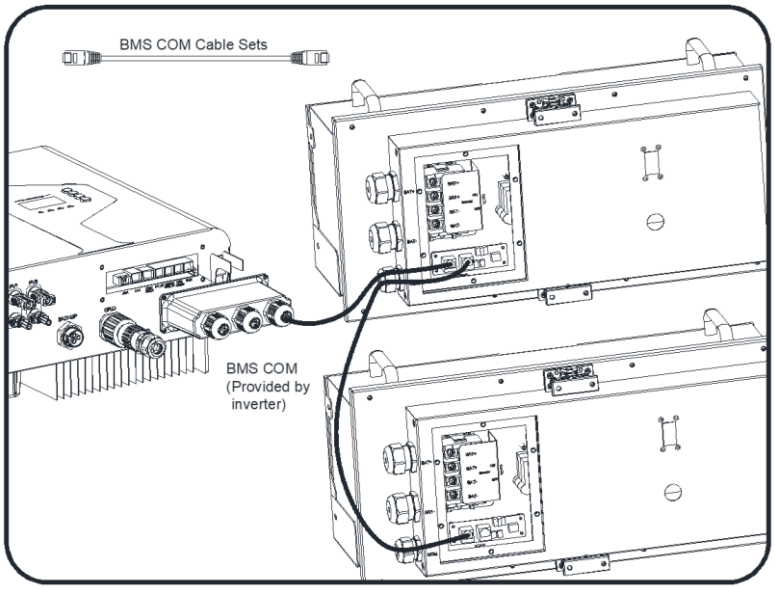

6.6.3. AUX/LAN/PV-CT/DRM、RRCR/GRID-CT、Meter/RS485/BMS Connection

For other communication (AUX, LAN, RRCR, DRM, Meter, CAN/RS485) connection, please follow the below steps.

1. Loosen the cable glands on the COM connection cover, and then unscrew the 4 screws on the COM connection cover.

2. Lead the communication cables through the cable glands of the COM connection cover, don't tighten the swivel nuts of the cable glands.
Insert the RJ45 plugs to the relative RJ45 sockets.

1) For meter wiring, refer to Chapter 6.4.2 and 6.4.3 for Chint or Acrel Meter Connection.
2) If DRM support is specified, the system may only be used in conjunction with a Demand Response Enabling Device (DRED). This ensures that the system implements the commands from the grid operator for active power limitation at all times. The system and the Demand Response Enabling Device (DRED) must be connected in the same network.
   Only DRM0 is available for SMILE5-INV.
3) Take out 6 pin terminal block for AUX connection. To do wiring connection, insert a screwdriver (blade width: 1.2 mm) into the relative connection position side.
   For AUX position definition, please see the AUX wiring documentation.

3. Place the COM connection cover against the inverter housing and tighten the 4 screws, at last secure the swivel nut of the cable glands.

The pin definition of the communication ports:

AUX	1	2	3	4	5	6		
	DO1_NO	DO1_COM	DO1_NC	DO2_NO	DO2_COM	DO2_NC		
DRM RRCR	1	2	3	4	5	6	7	8
	DRED 1/5	DRED 2/6	DRED 3/7	DRED 4/8	REF GEN/0	COM LOAD/0	/	/
PV_CT	1	2	3	4	5	6	7	8
	/	/	RS485_A7	/	/	RS485_B7		/
GRID_CT METER	1	2	3	4	5	6	7	8
	/	/	RS485_A7	/	/	RS485_B7	/	/
RS485	1	2	3	4	5	6	7	8
	/	/	/	RS485_B5	RS485_A5	/	/	/
BMS	1	2	3	4	5	6	7	8
	/	RS485_A4	/	CAN1_H	CAN1_L	/	RS485_B4	/

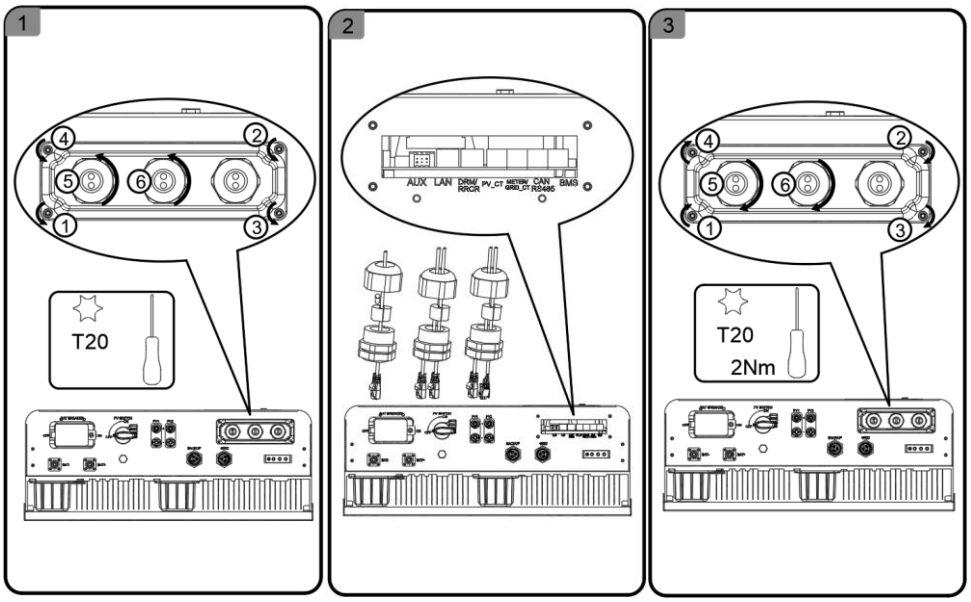

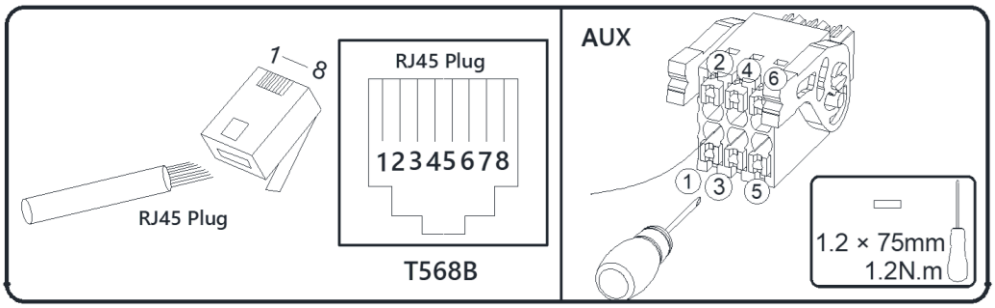

6.7. Mounting the Inverter Cable Cover and Battery Front cover

After finishing electrical connection of energy storage system, do the following operations.

Take out the cable cover of SMILE5-INV, and align it with the periphery of the inverter housing, press it down along the lower edge of the inverter housing.

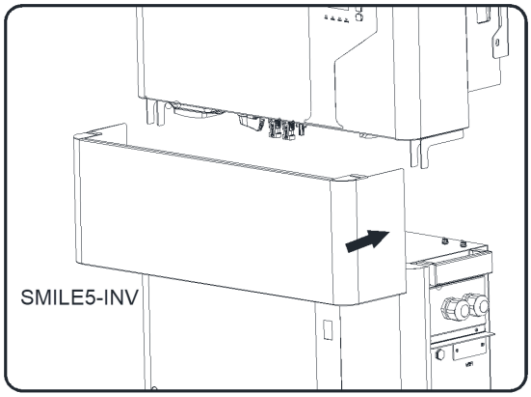

Lift up the front cover, push it forward to place if there is a front cover for Battery SMILE-Bat series.

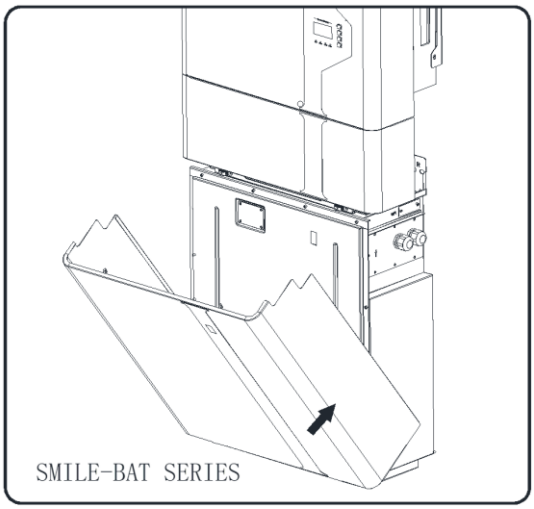

For Battery M4856-P, take out the front cover of M4856-P, and align the hole on the front cover with the power button on the battery body, then push it in place.

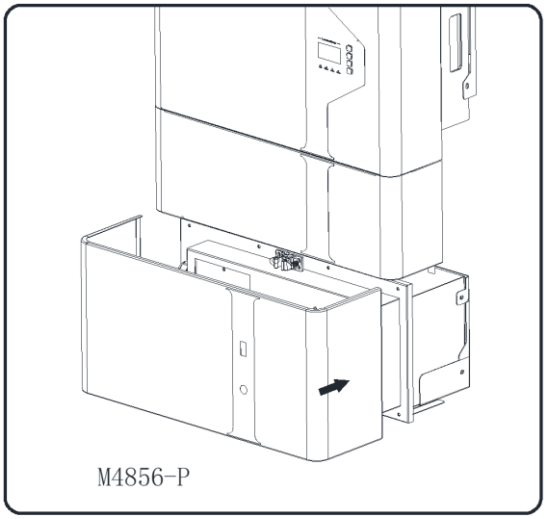

7. Installer Account Register and Install New System

7.1. Register on APP

7.1.1. Download and Install APP

1. Android device users can download the App through major Android application markets such as Google Play.

2. IOS device users can search for “AlphaESS” in App Store and download the App.

AlphaESS-APP

7.1.2. Register as Installer Account

If you don’t have an installer account, please register firstly.

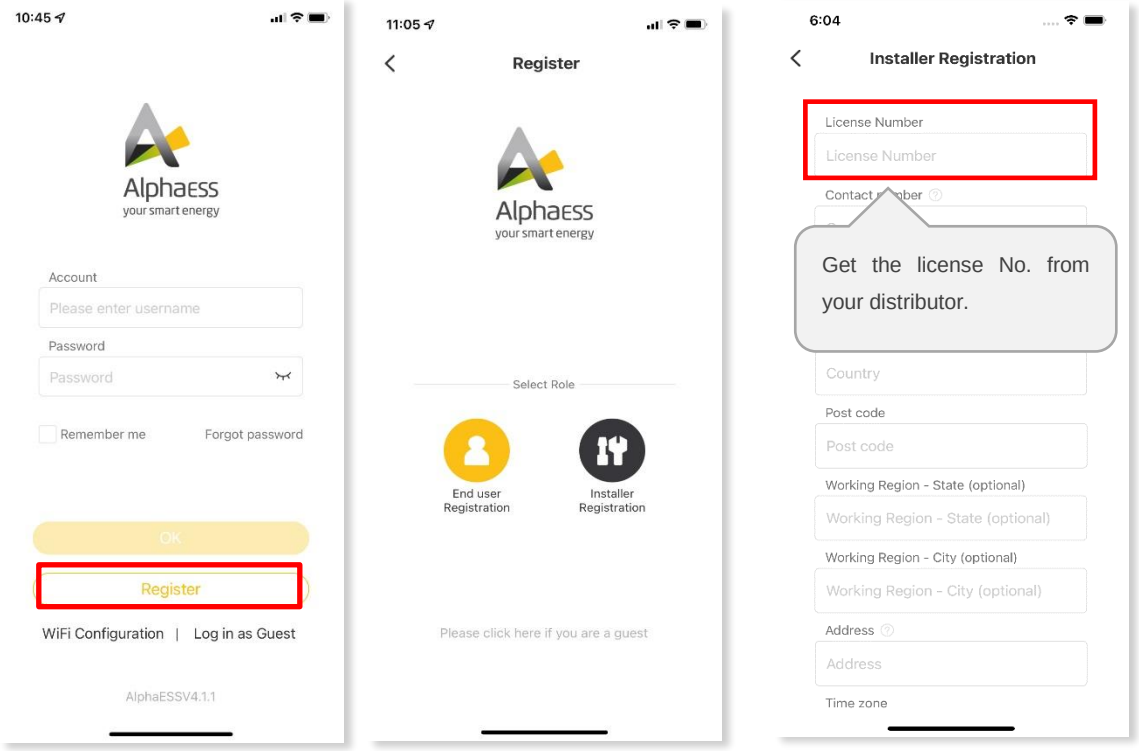

If you already have an installer account, please log in directly.

7.1.3. Overview of Functions for Installer Account

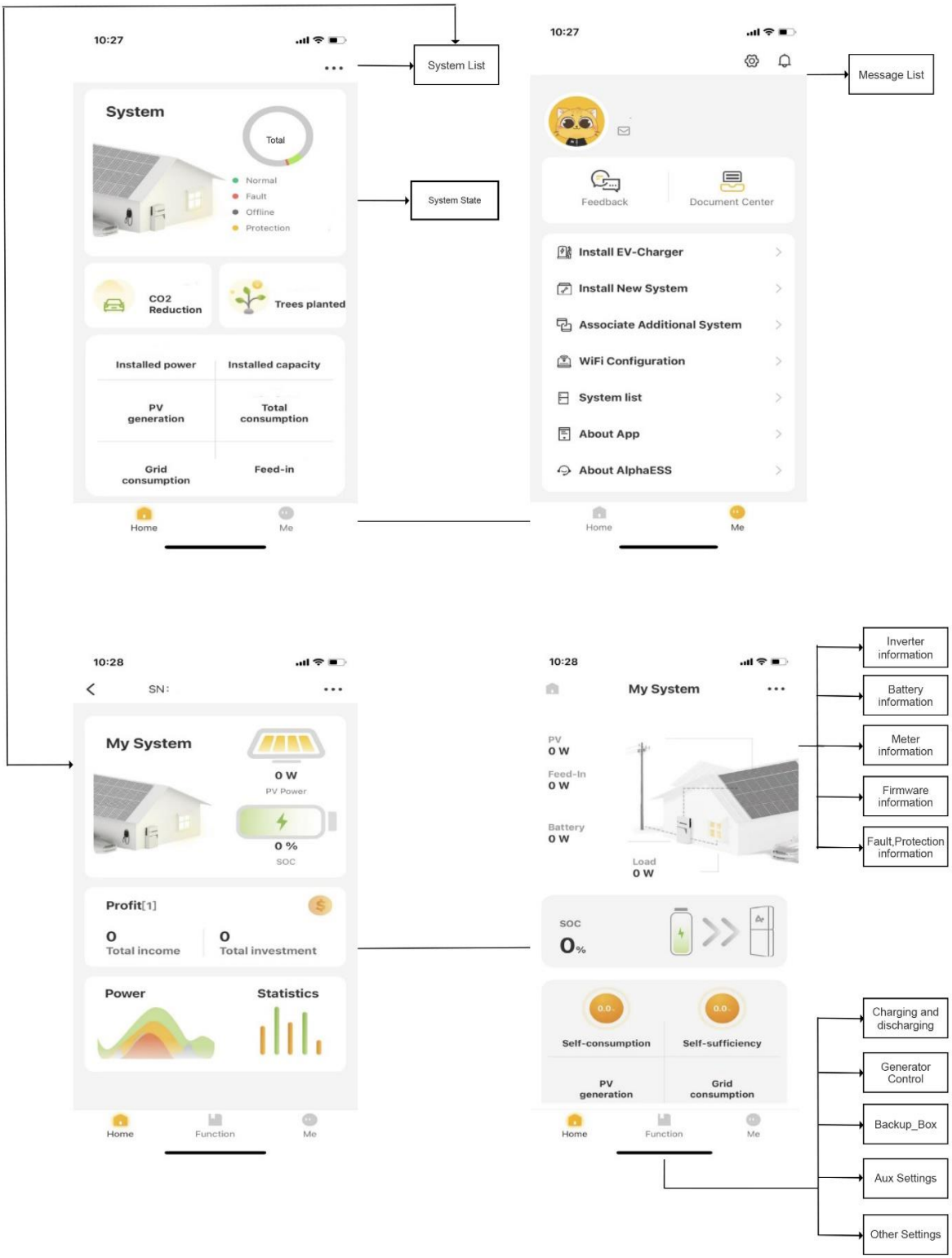

7.1.4. Install New SystemAustralian Installer

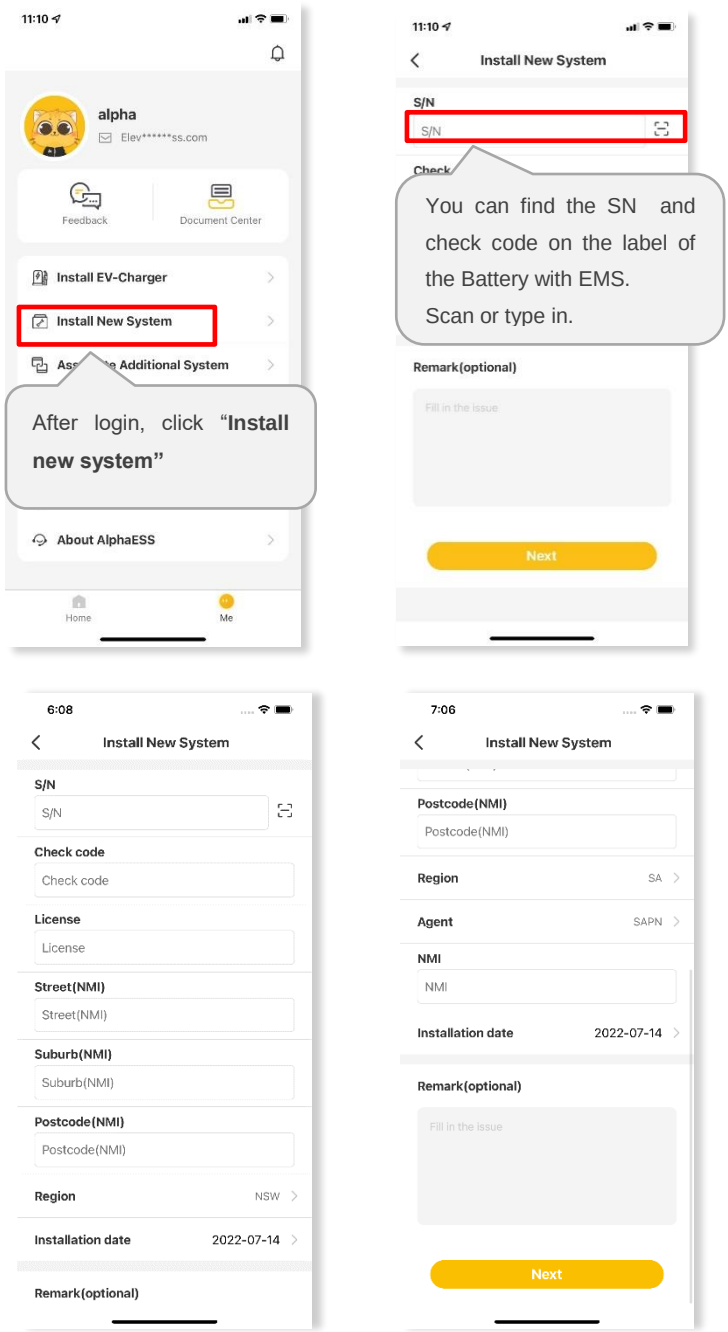

Please enter your installer account and click install New system to bind the system to your account and set the system.

Enter S/N, check code, license, create time, customer full name, contact number, address, and click the save button. If you are an Australian installer, you will need to fill in the Street (NMI), Suburb (NMI) and Postcode (NMI) fields and add a new Region field, which has six fixed options (NSW, QLD, VIC, SA, TAS, WA). If SA is selected for Region, two more fields are added which are Agent and NMI.

Fields that are not marked "optional" need to be filled in.

Click "Next" to go to the installation steps interface.

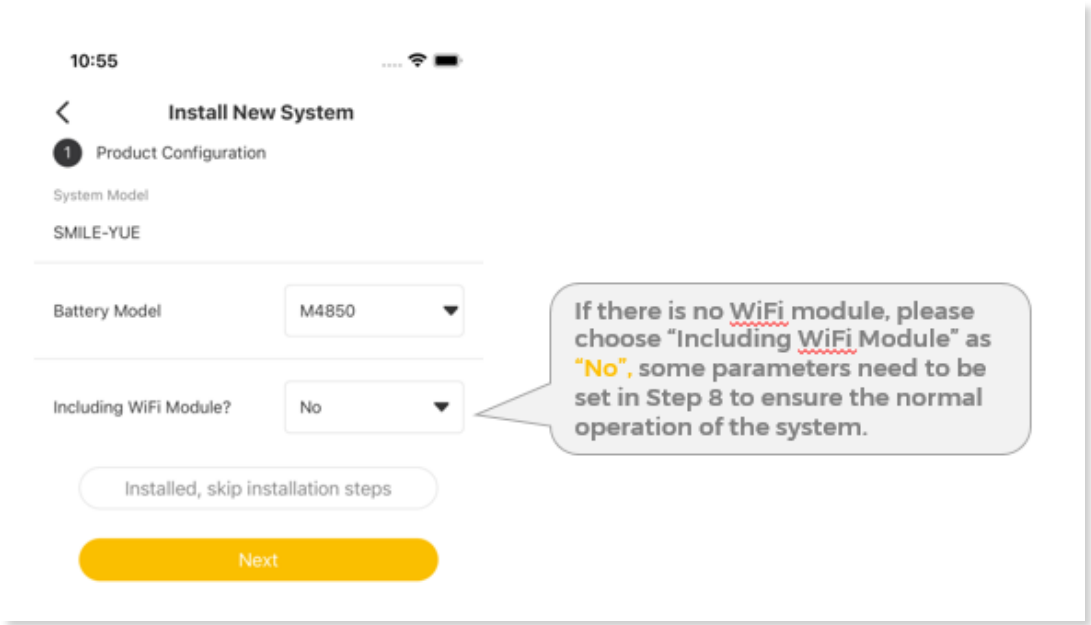

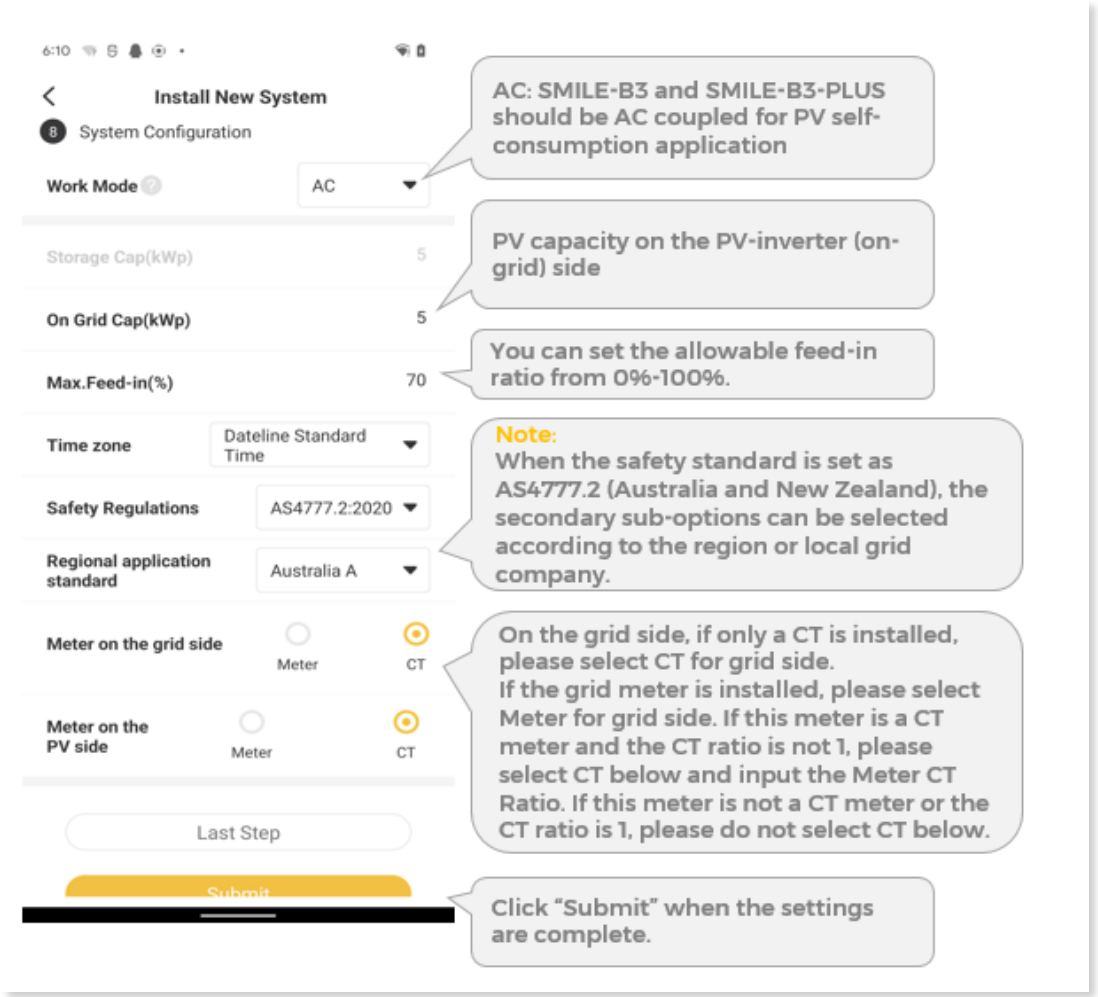

NOTICE

The safety standard must be set correctly

If you select a safety standard which is not valid for your country and purpose, it can cause a disturbance in the energy storage system and lead to problems with the grid operator. When selecting the safety standard, you must always observe the locally applicable standards and directives as well as the properties of the PV system (e.g. PV system size, grid-connection point).

- If you are not sure which safety standard is valid for your country or purpose, contact your grid operator for information on which safety standard is to be configured.

If there is a WiFi module, please choose “Including WiFi Module” as “Yes”, the APP will jump to the WiFi configuration page, and please refer to section 9.3.

7.2. Regiter on AlphaCoud

7.2.1. Register as Installer Account

You can create a new account on our webserver for the normal monitoring. In addition, a part of our warranty is based on this connection to our webserver. The data produced prior to registration can be synchronized to the webserver.

Step1： Please use the following steps: Open the portal: www.alphaess.com.

Step2： Please fill in “Username”, “Password” and click “Login” if you have already registered.

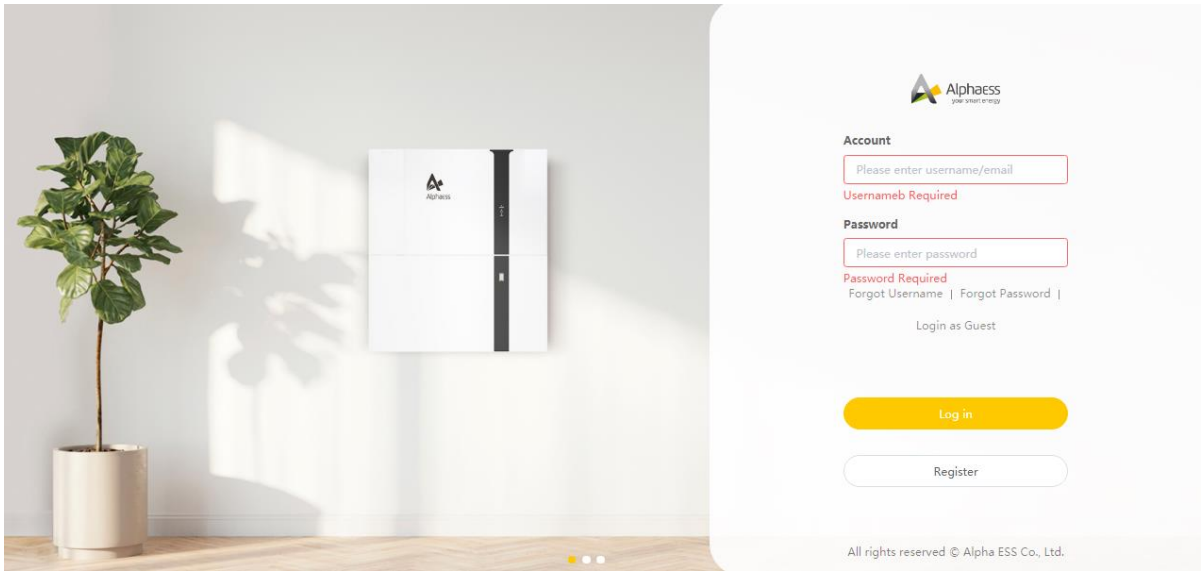

If not, please register by filling in the following web form；

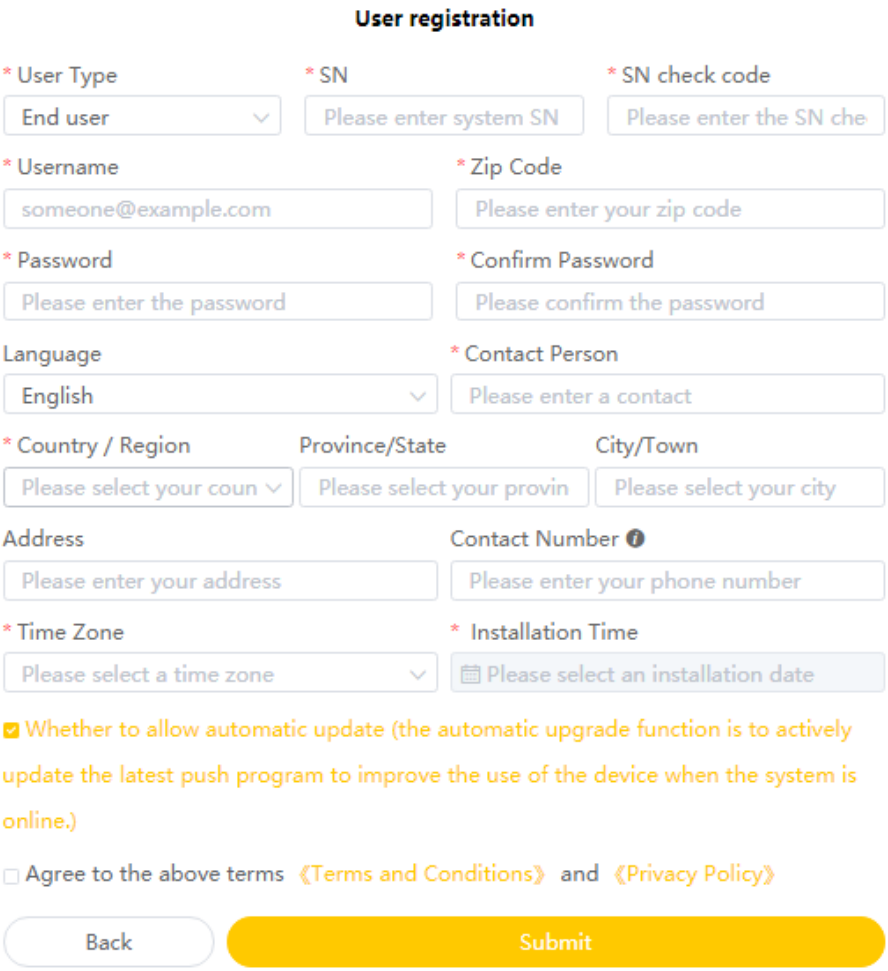

In this form, all fields with a red star are compulsory, and you can select the finally users or installation procedures.
***Serial number:** EMS serial number (please see the nameplate of the inverter)
***Username:** 5-15 letters / numbers
***Password:** 5-15 letters / numbers / characters
More details are available in the Online Monitoring Web Sever Installers User Manual, which can be downloaded from AlphaESS homepage.

7.2.2. Install New System

Installers who haven't yet registered need to click “Register” to visit the registration page. Please refer to “AlphaCloud Online Monitoring Webserver Installers User Manual”, which you can get from AlphaESS sales and get license number from relevant sales from Alpha ESS.

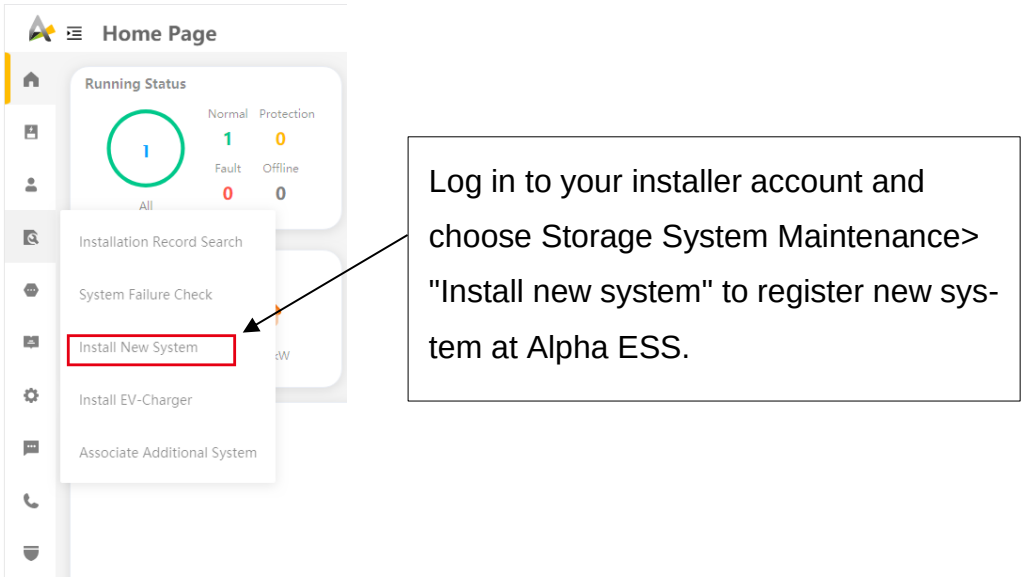

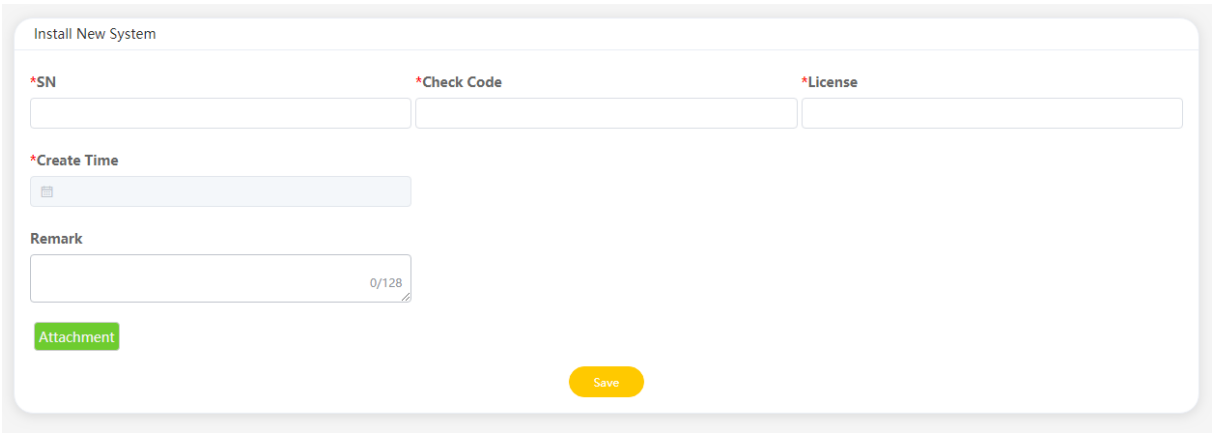

Enter the system S/N, check code, license, installation date and click the save button. The red * in front of it is required. Click the Browse button to select the attachment you want to add.

8. Powering On and Off the System

8.1. Powering on the System

1) Switch on the battery breaker of the batteries.

2) Switch on the battery breaker which is at the bottom of the SMILE5-INV.

3) Press the battery button, if there are more than one battery, the button for each battery should be pressed within 5s of the previous one.

4) Switch on the AC breaker between the grid port of the SMILE5-INV and the grid.

5) Switch on the AC breaker between the backup port of the SMILE5-INV and the loads.

6) Switch on the PV switch at the bottom of the SMILE5-INV if there is any.

7) Switch on the AC breaker (if there is any) between the PV-inverter and the grid.

8.2. Powering off the System

WARNING

After the energy storage system is powered off, the remaining electricity and heat may still cause electric shocks and body burns. Therefore, put on protective gloves and operate the product 5 minutes after the power-off.

Procedure

1) Switch off the AC breaker between the SMILE5-INV and the load.

2) Switch off the AC breaker between the SMILE5-INV and the grid.

3) Switch off the PV switch at the bottom of the SMILE5-INV if there is any.

4) Switch off the PV switch between the PV string and the SMILE5-INV if there is any.

5) Switch off the battery breaker which is at the bottom of the SMILE5-INV.

6) Long press 5s the power button of the battery.

7) Switch off the battery breaker of the battery.

9. COMMISSIONING

9.1. Checking Before Power-On

No.	Check Item	Acceptance Criteria
1	Mounting environment	The mounting space is proper, and the mounting environment is clean and tidy, without foreign objects.
2	Battery pack and inverter mounting	The battery pack and inverter are mounted correctly, securely, and reliably.
3	WiFi mounting	The WiFi module is mounted correctly, securely, and reliably.
4	Cable layout	Cables are routed properly as required by the customer.
5	Cable tie	Cable ties are secured evenly and no burr exists.
6	Grounding	The ground cable is connected correctly, securely, and reliably.
7	Switch and breakers status	The PV switch (if there is any) and battery breakers and all the breakers connecting to the product are OFF.
8	Cable connections	The AC cables, PV cables (if there is any), battery power cables, and communication cables are connected correctly, securely, and reliably.
9	Unused power terminals	Unused power ports and communication ports are blocked by watertight caps.

9.2. Powering on the System

- Check the voltage range and frequency range of the grid and the installation of CT(s) or meter(s).
- Switch on the battery breaker of the battery.
- Switch on the battery breaker located on the energy storage inverter.
- Switch on the external AC breaker between the grid and the energy storage inverter.
- Firstly, don’t press the battery button, don’t switch on the PV switch on the energy storage inverter and don’t switch on the AC breaker on the PV inverter if there is any.

9.3. WiFi Module Configuration and Parameter Settings

9.3.1. WiFi Configuration

This section is for users who have an energy storage system with a WiFi module.

AlphaESS App is able to configure the network, set system basic parameter, monitor system operation status and check configuration information.

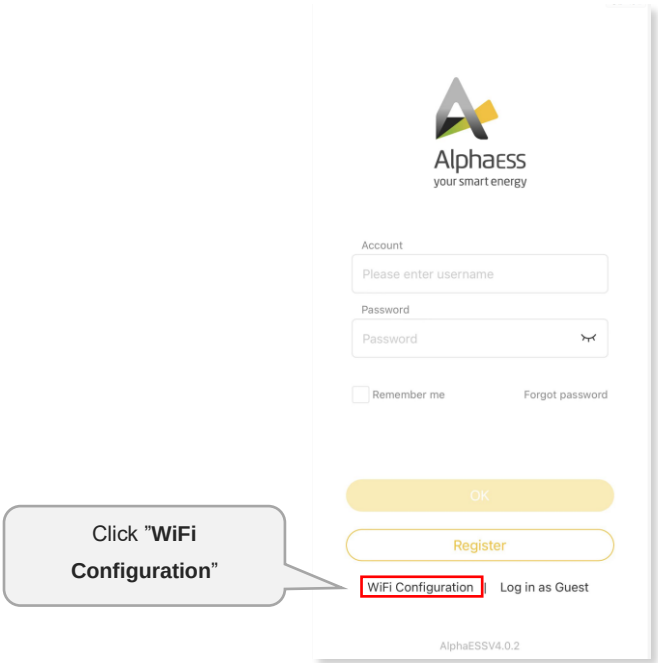

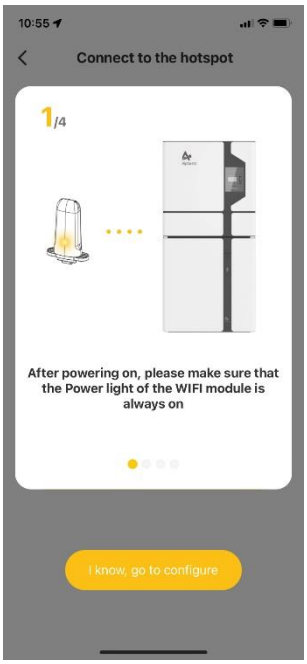

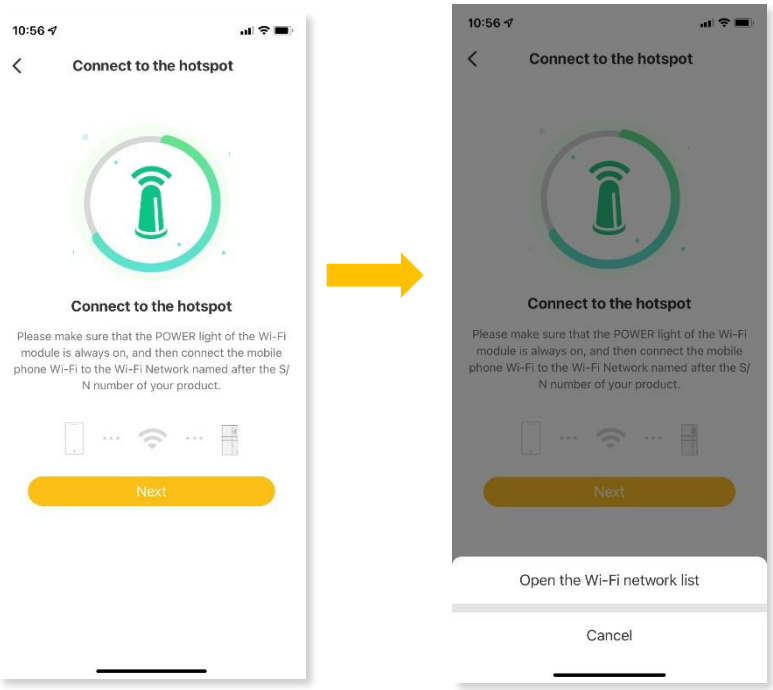

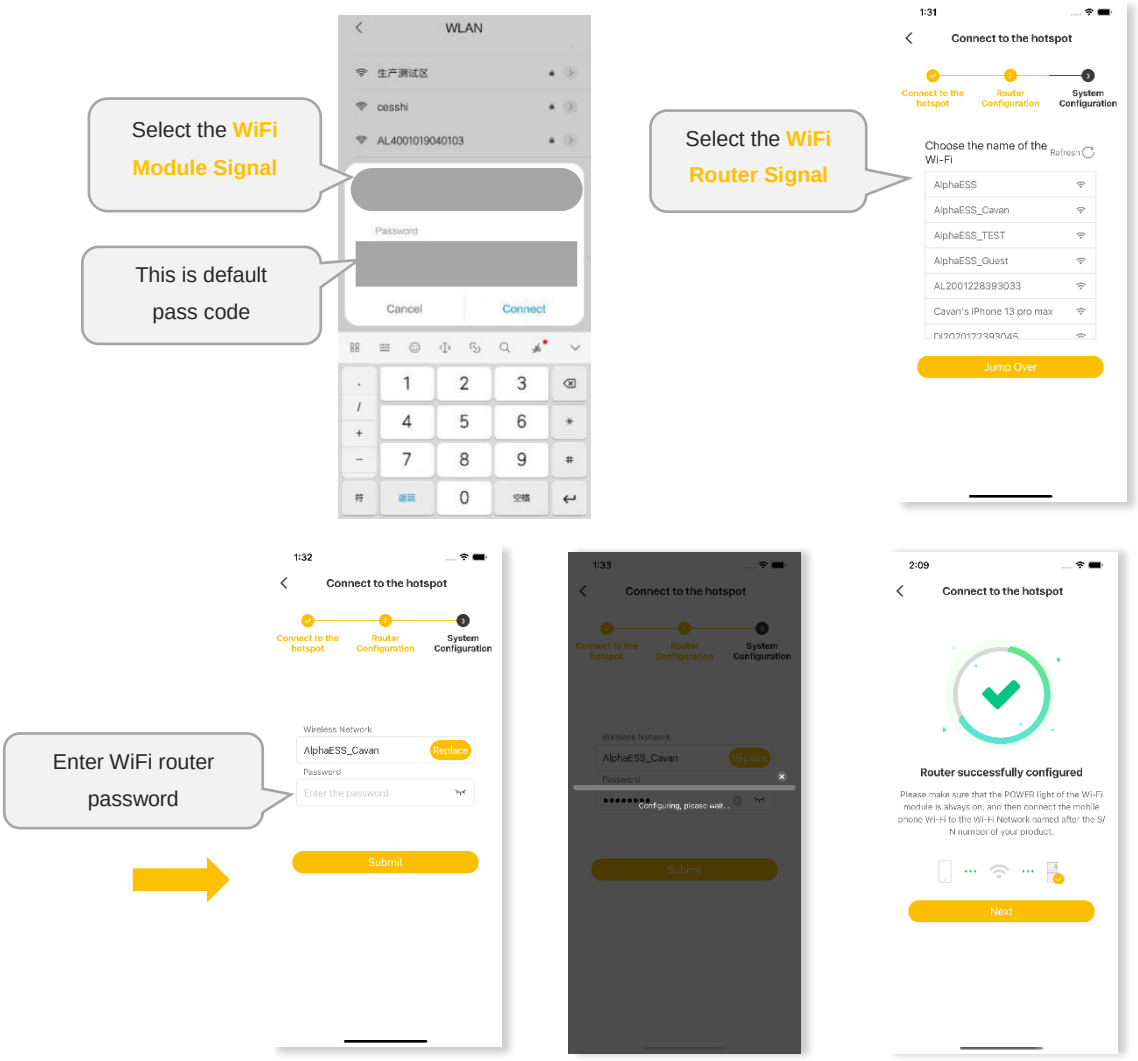

NOTE

The system will not be able to connect to the internet without WiFi configuration.

9.3.1.1 Basic Parameters Settings

DC Mode

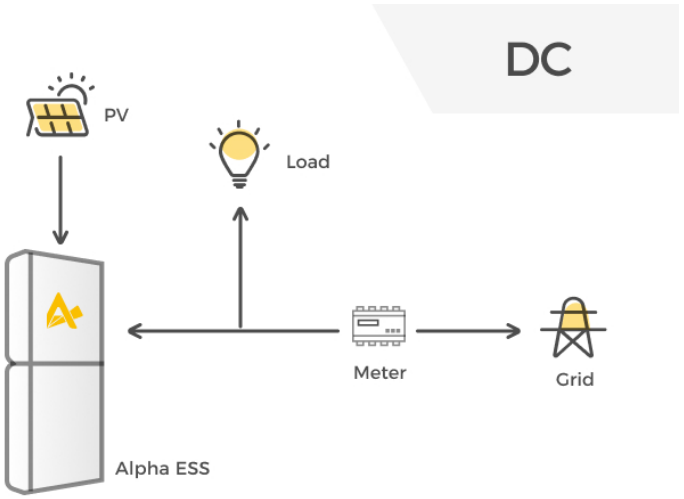

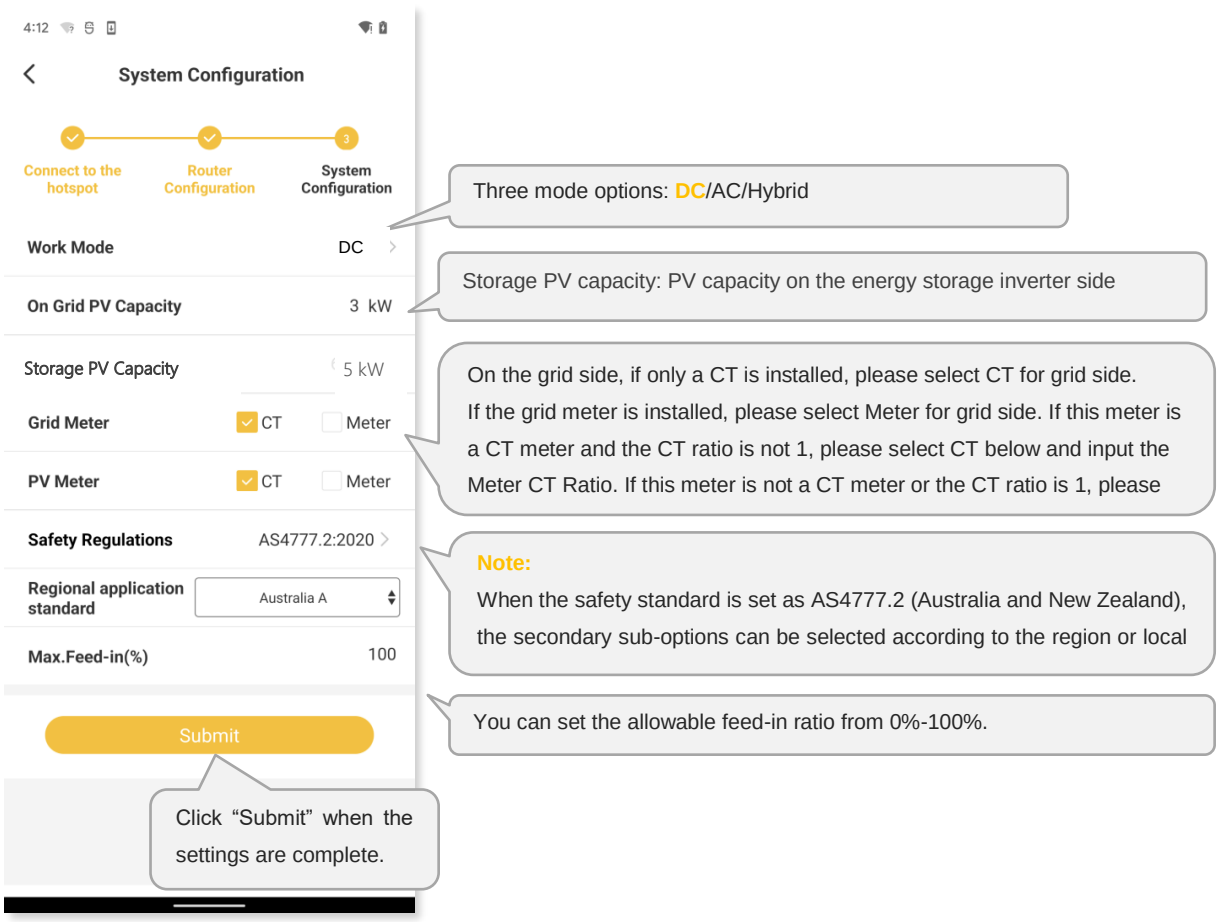

AC Mode

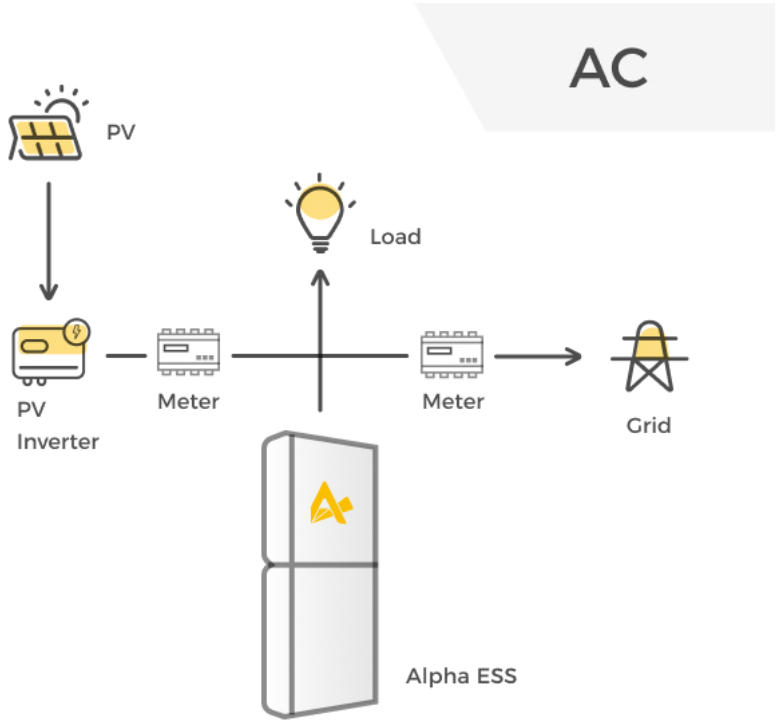

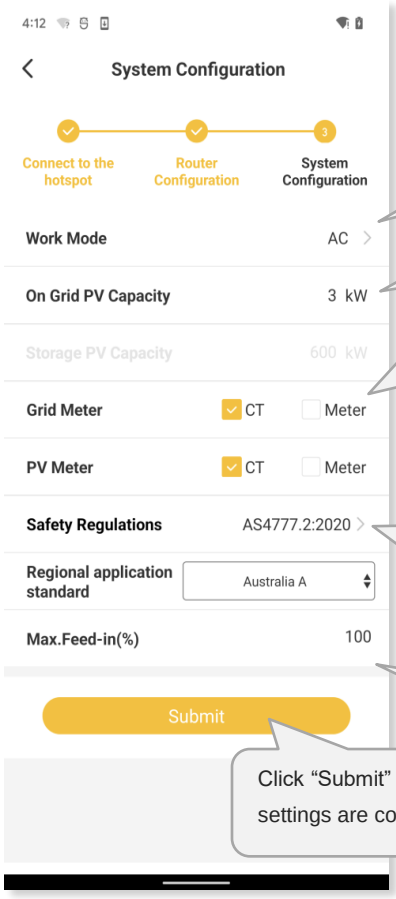

Three mode options: DC/AC/Hybrid

PV capacity on the PV-inverter (on-grid) side

On the grid side, if only a CT is installed, please select CT for grid side.
If the grid meter is installed, please select Meter for grid side. If this meter is a CT meter and the CT ratio is not 1, please select CT below and input the Meter CT Ratio. If this meter is not a CT meter or the CT ratio is 1, please do not

Note:
When the safety standard is set as AS4777.2 (Australia and New Zealand), the secondary sub-options can be selected according to the region or local grid

You can set the allowable feed-in ratio from 0%-100%.

Click “Submit” when the settings are complete.

Hybrid Mode

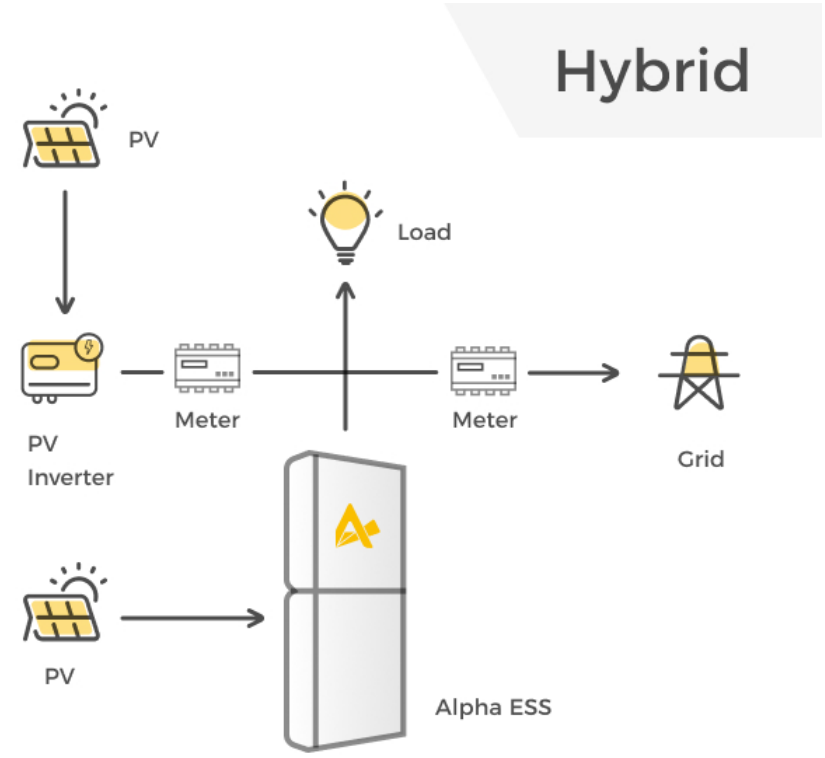

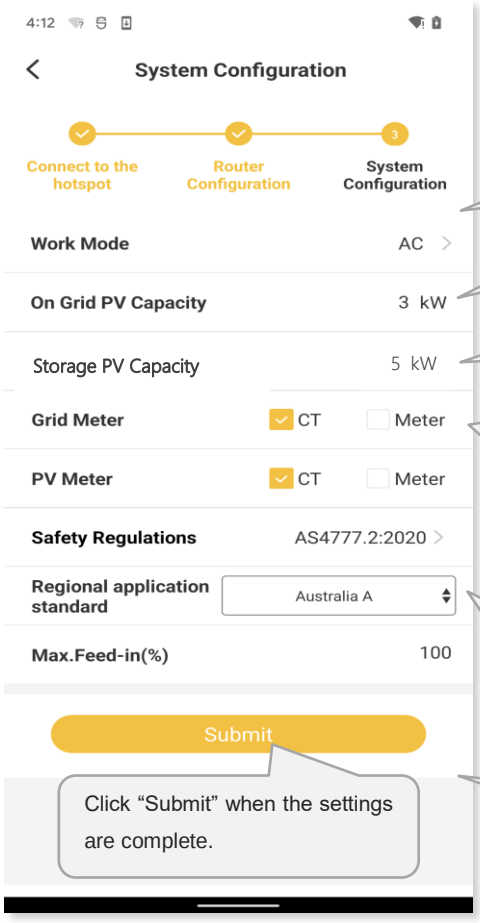

Three mode options: DC/AC/**Hybrid**

PV capacity on the PV-inverter (on-grid) side

Storage PV capacity: PV capacity on the energy storage inverter side

On the grid side, if only a CT is installed, please select CT for grid side.
If the grid meter is installed, please select Meter for grid side. If this meter is a CT meter and the CT ratio is not 1, please select CT below

Note:
When the safety standard is set as AS4777.2 (Australia and New Zealand), the secondary sub-options can be selected according to the region or local grid company.

You can set the allowable feed-in ratio from 0%-100%.

NOTICE

The safety standard must be set correctly

If you select a safety standard which is not valid for your country and purpose, it will cause a disturbance in the energy storage system and lead to problems with the grid operator. When selecting the safety standard, you must always observe the locally applicable standards and directives as well as the properties of the PV system (e.g. PV system size, grid-connection point).

- If you are not sure which safety standard is valid for your country or purpose, please contact your grid operator for information on which safety standard is to be configured.

9.3.2. Direct Commissioning on WiFi configuration

You can commission the system during the WiFi configuration process directly.

9.3.2.1 Check the Running State without PV and Battery

- Keep the PV switch of the energy storage inverter and AC breaker of the PV-inverter off. Don't power on the batteries.
- Turn on some larger loads directly connected on the grid to check the grid status, the inverter LED ("Fault") will be red, don't worry, because the battery is not communicated. The grid power should be positive. Otherwise please check the direction of grid CT or grid meter installation.

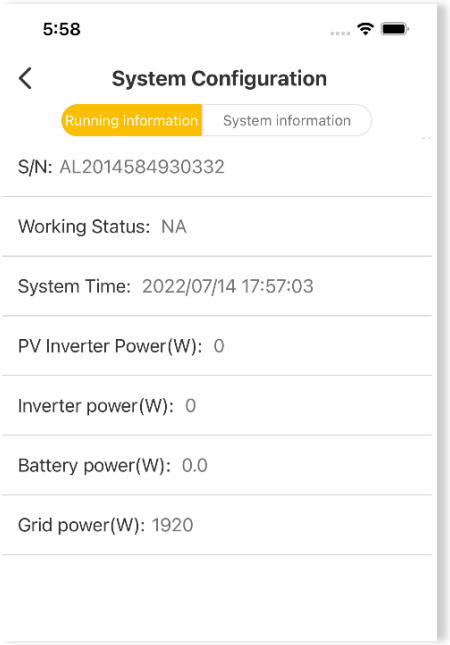

9.3.2.2 Check the Running State of PV and Battery

- Switch off the AC breaker between the grid port on the energy storage inverter and the grid, and switch off the AC breaker between the backup port on the energy storage inverter and the loads.
- Press the battery button. If there are more than one battery, press the button of each battery and the interval time of powering on any two batteries should be less than 5s.
- Switch on the AC breaker between the grid port of the energy storage inverter and the grid.
- Switch on the PV switch on the energy storage inverter if there is any and AC breaker on the PV-inverter if there is any.
- Switch off all the loads to see the battery charging status and the inverter LED ("Normal") will be solid on green. Battery power value should be negative. If the system is in AC or hybrid mode, the PV inverter power value should be positive. If it is not normal, please check the direction of PV CT or PV meter installed.

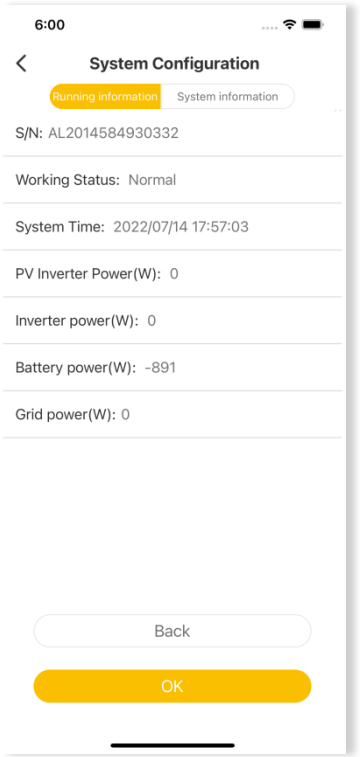

DC Mode

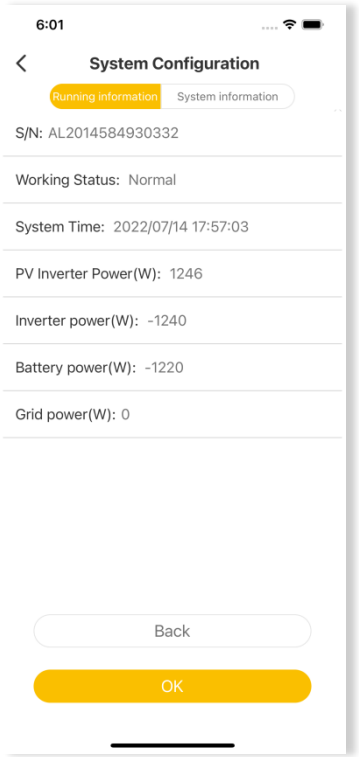

AC Mode

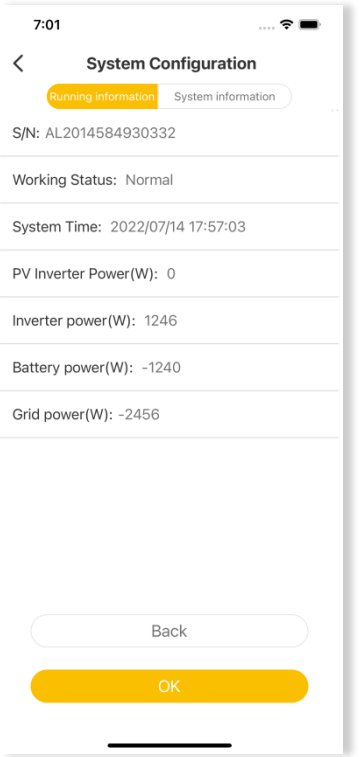

Hybrid Mode

9.3.2.3 Check the UPS State

- Please connect an essential electrical appliance to the socket of backup load. Or switch on an essential electrical appliance already connected on the backup load port of the inverter.
- Switch on the AC breaker on the backup port of the energy storage inverter.
- Switch off the external AC breaker between the grid and the energy storage inverter.
- The inverter will enter the UPS mode at once.
- If the electrical appliance on backup side can work normally, it means that the wiring of the backup has been connected correctly.

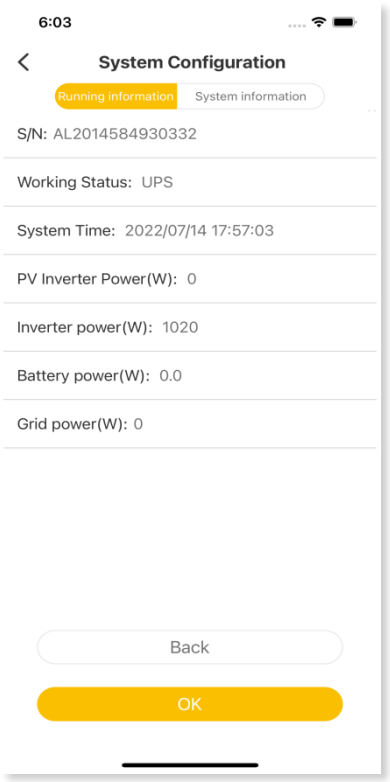

9.4. Installing New System and Settings on the APP

9.4.1. Download and Install the APP

Download and install the APP by scanning the QR code.

9.4.2. Register as an Installer

If you don't have an installer account, please register first.

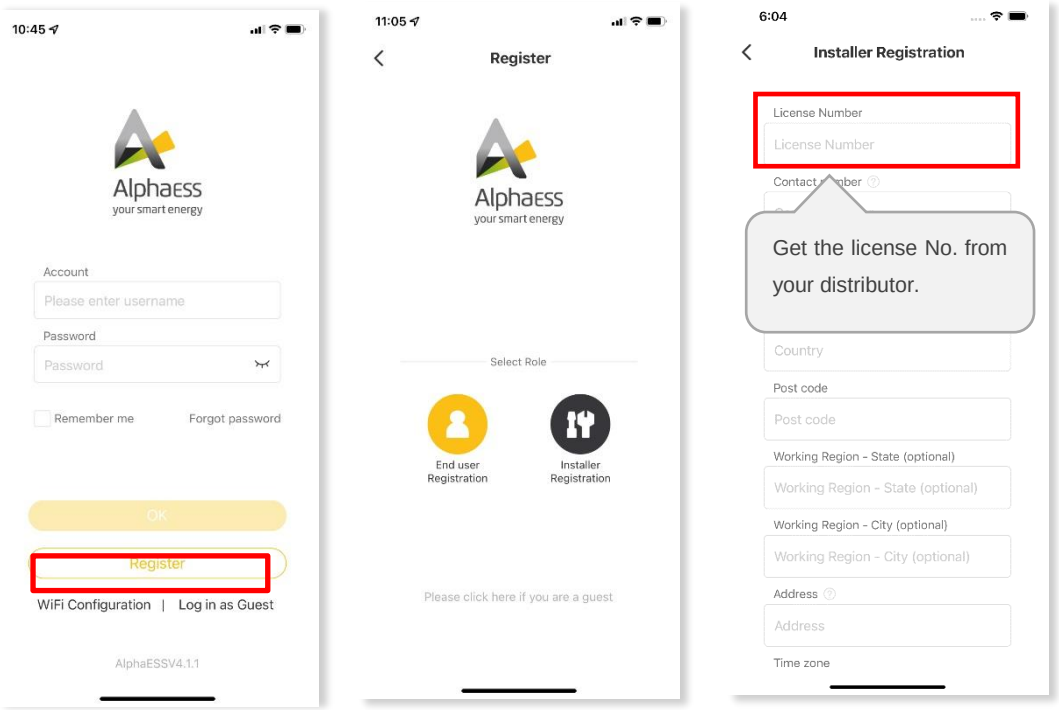

If you already have an installer account, please log in directly.

9.4.3. Install New System

If you have "installed" the new system already or want to install it later, please directly to the Section 9.3 WiFi Module Configuration and Parameter Settings. If not, you can "Install New System" first.

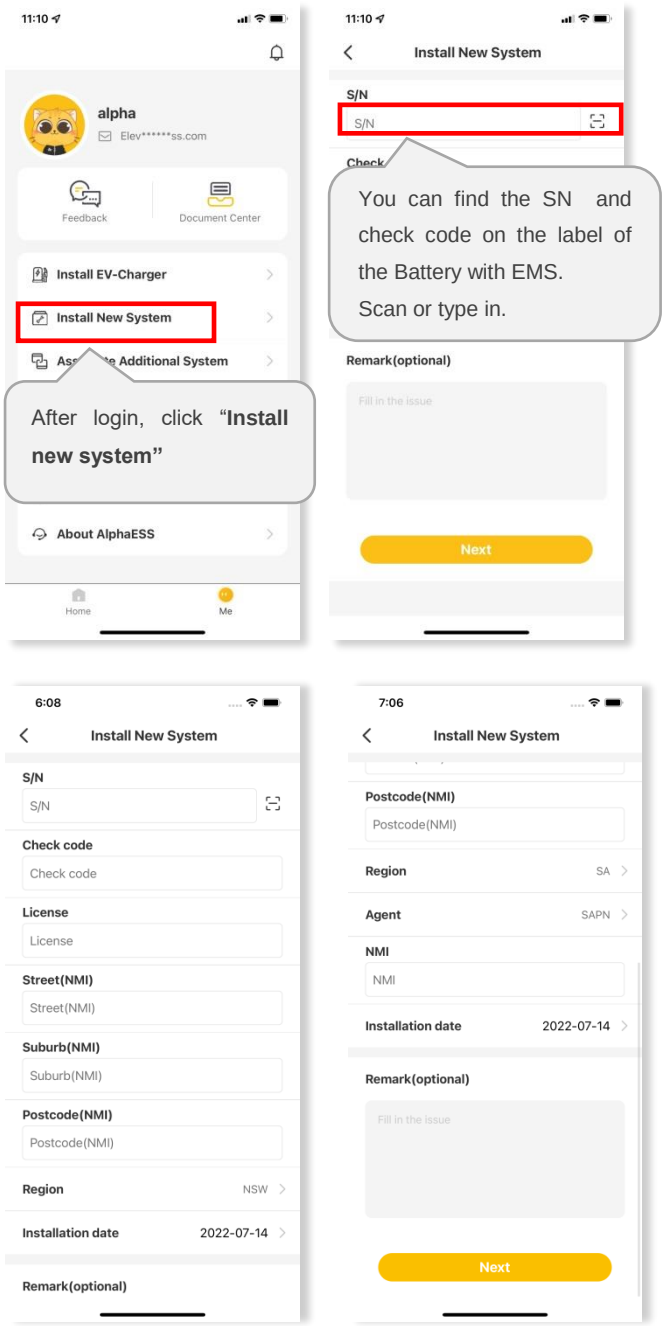

Australian Installer

Please enter your installer account and click "Install New System" to bind the system to your account and set the system.

Enter S/N, check code, license, create time, customer full name, contact number, address, and click the save button. If you are an Australian installer, you will need to fill in the Street (NMI), Suburb (NMI) and Postcode (NMI) fields and add a new Region

field, which has six fixed options (NSW, QLD, VIC, SA, TAS, WA). If SA is selected for Region, two more fields are added which are Agent and NMI.

Fields that are not marked "optional" need to be filled in.

Click "Next" and go to Section 10.3 if the WiFi has not been configured.

9.5. Check the Running State On-line

If you have completed commissioning as described in section 10.3.2, please ignore this section.

You can also commission the system after WiFi configuration.

Please make sure the PV switch and battery breakers and all the breakers connecting to the product are ON.

9.5.1. Check the Charging Function of the Product

- To make sure the system is installed and operating correctly, please set the system to “Charging/Discharging Setting” by following the instructions below.

Step1

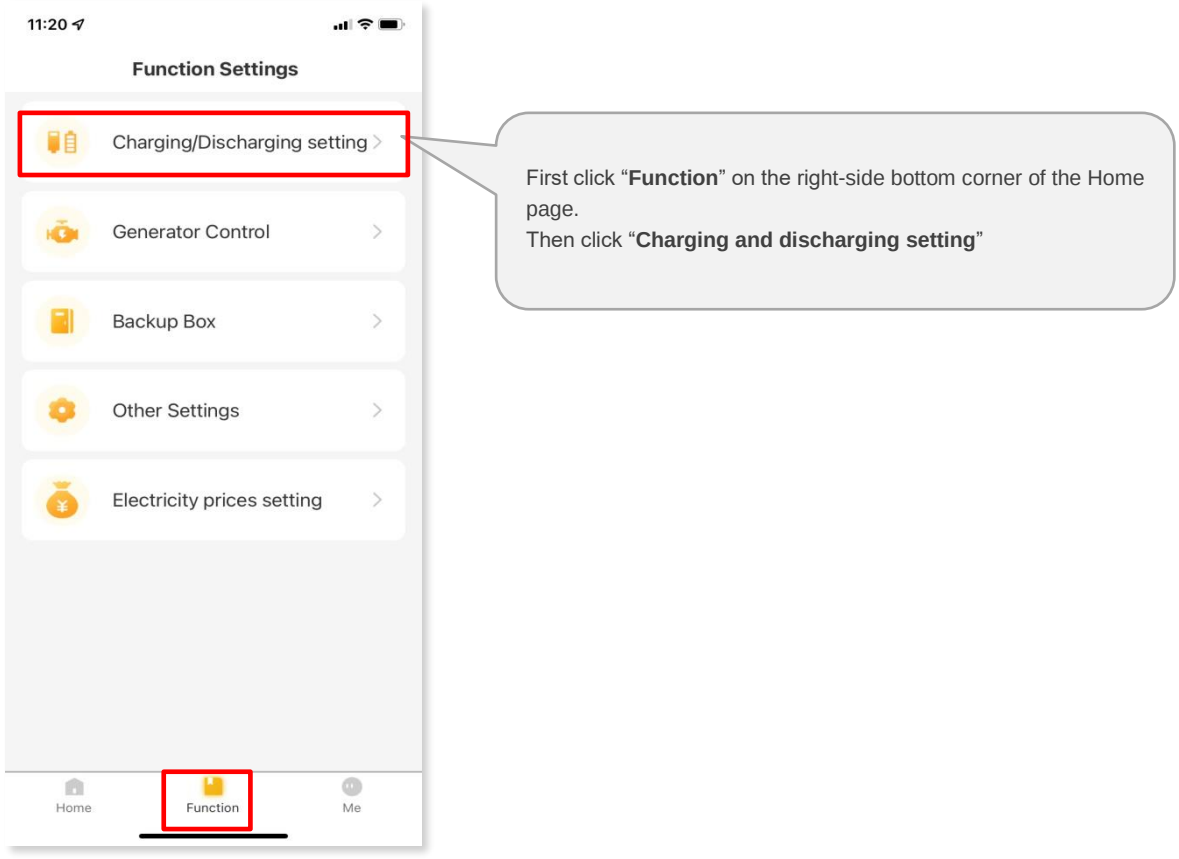

Step2

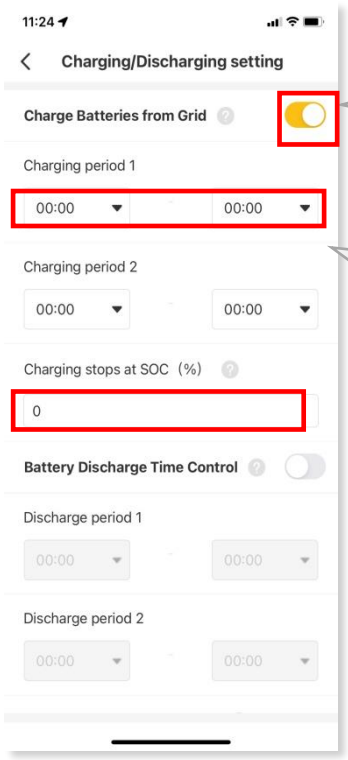

Select "**ON**" to Charge Batteries from Grid"

please set the "Charging period 1" for the time and the SOC would be **100** under this operation.

Step3



The relative value should be like this:Load = PV ± GRID – Battery
Battery should be in **charging** status.**PV arrow** should be as the picture shows.±: >>absorbing from grid: +; << feed-in to grid:-
If not correct, please check the CT or meter installed direction of both grid and PV side

- Check the running status of the system in "Step 3".
- If the operation is normal as described in "Step3", please remember to deactivate the "Charging/Discharging Setting" by clicking "OFF" and save the changes.

9.5.2. Check the PV Generation and Discharging Function of the Product

Step1: Please switch off the PV switch on the energy storage inverter and the AC breaker on the PV inverter if there is any. Switch on some larger loads to see the battery discharging status.

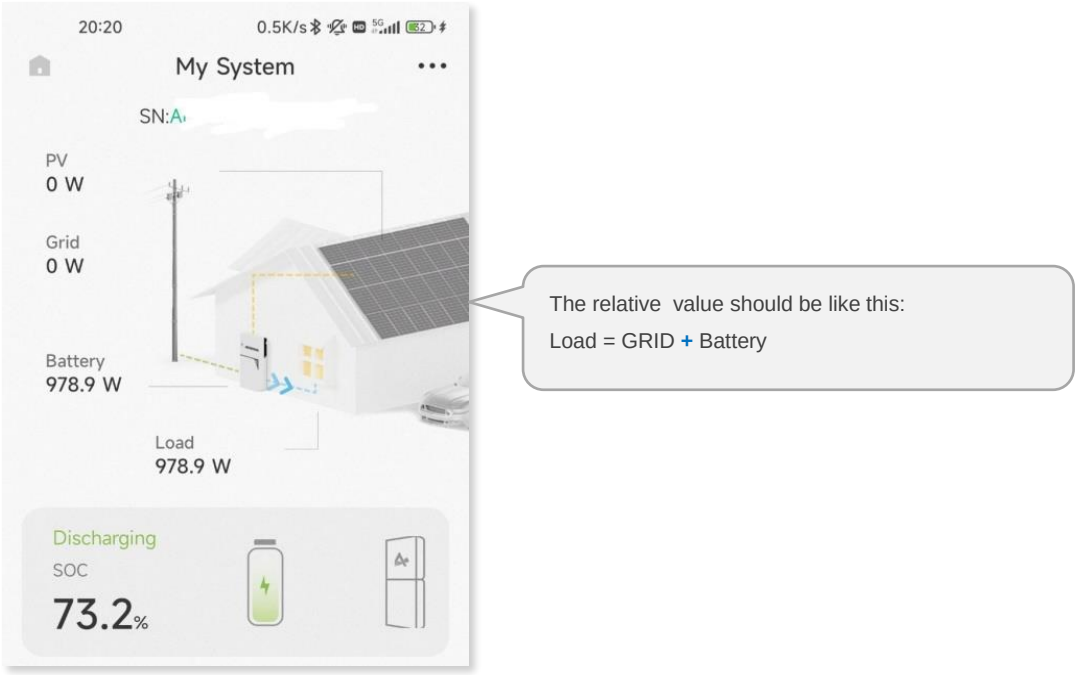

Step 2: Please switch on the PV switch on the energy storage inverter and the AC breaker on the PV inverter if there is any. Check the running status of the system.

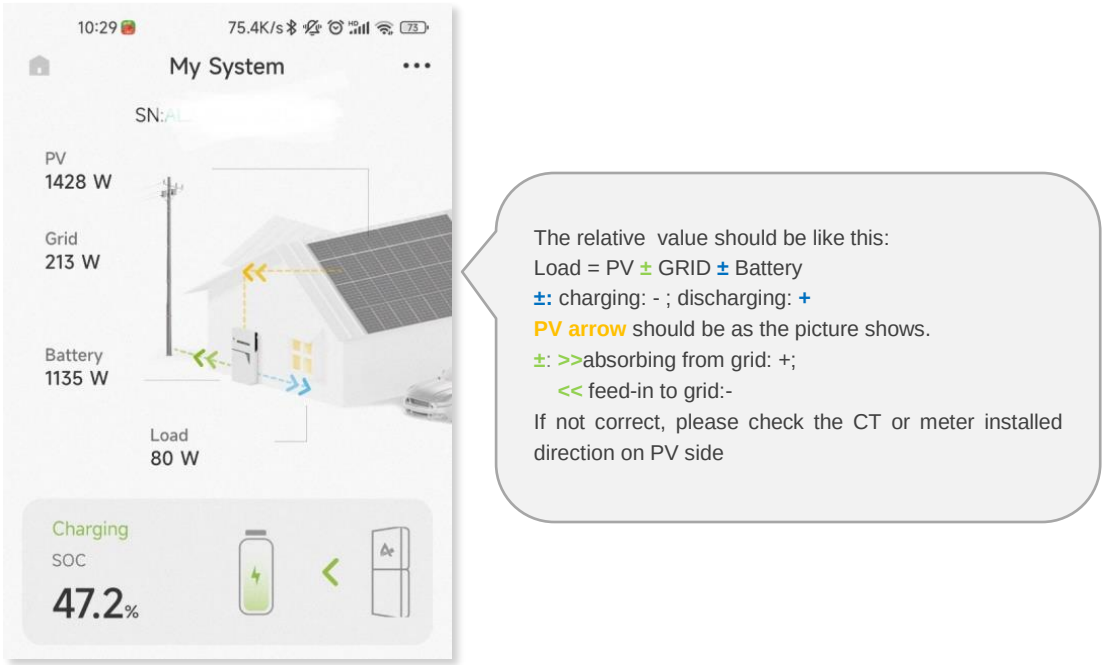

9.5.3. Check the UPS State of the Product

- Please connect an essential electrical appliance to the socket of backup load. Or switch on an essential electrical appliance already connected on the backup load port of the energy storage inverter.
- Switch on the AC breaker on the backup port of the energy storage inverter.
- Switch off the external AC breaker between the grid and the energy storage inverter.
- The product will enter the UPS mode at once.
- If the electrical appliance on backup side can work normally, it means that the wiring of the backup has been connected correctly.

NOTICE

During commissioning, if the LED indictors on the display panel of the inverter or the battery pack show red, please refer to chapter troubleshooting.

9.5.3.1 Switch on all of the Breakers.

Please don’t forget to switch on all of the breakers.

9.6. Instruct the End User to Install the APP

Please make sure that your end user has downloaded the APP and registered the account correctly, and added the system SN.

10. Maintenance and Troubleshooting

10.1. Routine Maintenance

Normally, the energy storage system need no maintenance or calibration.
However, in order to maintain the accuracy of the SOC, it is recommended to perform a full charge calibration for SOC (charging battery until the charging power is 0) on the battery at regular intervals (such as two weeks).
Disconnect the system from all power sources before cleaning. Clean the housing, cover and display with a soft cloth.
To ensure that the energy storage system can operate properly in the long term, you are advised to perform routine maintenance on it as described in this chapter.

Maintenance checklist

Check Item	Acceptance Criteria	Maintenance Interval
Product cleanliness	The heatsink at the back of the product are free from obstacles or dust.	Once every 6 to 12 months
Product visible damage	The product are not damaged or deformed.	Once every 6 months
Product running status	1. The product operate with no abnormal sound. 2. All parameters of the product are correctly set. Perform this check when the product is running.	Once every 6 months
Electrical connections	1. Cables are securely connected. 2. Cables are intact, and in particular, the cable jackets touching the metallic surface are not scratched. 3. Unused cable glands are blocked by rubber sealing which are secured by pressure caps.	Perform the first maintenance 6 months after the initial commissioning. From then on, perform the maintenance once every 6 to 12 months.

CAUTION

Risk of burns due to hot heatsink and housing

The heatsink and housing of the inverter can get hot during operation.

- During operation, do not touch any parts other than the cover.
- Wait approx. 30 minutes before cleaning until the heatsink has cooled down.

10.2. Troubleshooting

10.2.1. Inverter Error Troubleshooting

Error No.	Error Description	Solution
100005	BUS_OVP1	1. If it happens occasionally, the inverter can recover automatically, no processing is required. 2. If it persists, please contact the customer service center for further check.
100007	Insulation_fault	1. Confirm whether the installation environment of the solar panels and their cables is wet and the alarm occurs frequently, please improve the installation environment if needed; 2. Confirm whether it is rainy weather when the alarm occurs (may cause the air around the solar panels and their cables to be humid). Generally, the alarm will be automatically cleared after the weather is clear, and no additional processing is required; 3. If the insulation resistance alarm occurs frequently and there are no other alarms, disconnect all the solar panel strings, only connect a single string to power on each time, and check all the strings in turn to see if an alarm occurs, so as to locate the abnormal string; 4. If the insulation resistance alarm and accompanied other alarms occur frequently, but the inverter can sometimes be connected to the grid to generate power, the insulation resistance tester or megohmmeter can be used to measure each string in turn to locate the abnormal string (normally is megohm level); 5. If the insulation resistance alarm and accompanied other alarms occur frequently, but the inverter has been unable to connect to the grid to generate power, it can be judged that the inverter is faulty and contact customer service for further check.

100008	GFCI_fault	1. If it occurs frequently and accompanied by an insulation resistance alarm, please check according to the abnormal insulation resistance alarm repair guidence; 2. If it occurs frequently, accompanied by other alarms, and the inverter has been unable to connect to the grid for power generation, it can be judged that the inverter is faulty and contact customer service for further check.
100010	Grid_relay_fault	1. If it occurs occasionally, it is caused by a short-term abnormality of the power grid, and the inverter can automatically recover without processing. 2. If it occurs frequently or continuously, please refer to the guidence of grid voltage high alarm for troubleshooting. If there is no abnormality on the grid side, it can be judged that the inverter is faulty (if there is damage to the relay after opening the cover, it can be concluded), please contact customer service center for further check.
100012	PV_Reverse	Check whether the cables of PV strings are correctly connected.If they are connected reversely, reconnected the cables.
100025	BAT_OVP	1. If the alarm occurs during the initial installation, check whether the battery voltage is within the allowable range; 2. If the alarm occurs during operation, it may occur during charging. Check whether the battery wiring is loose, and whether the BMS communication is abnormal lead to MOS disconnection.

100026	BAT_UVP	1. If the alarm occurs during the initial installation, check whether the battery voltage is within the allowable range, and check whether the inverter breaker and the battery switch are closed; 2. If the alarm occurs during operation, check whether the breaker is tripped, and check whether the battery BMS alarms is happens.
100027	Battery_lose	1. Check whether the battery wiring is connect well; 2. Check whether the DC Switch is closed; 3. Check whether the BMS communication is normal;
100030	BAT1_discharge_OCP	If the battery is over-discharged, reduce the Backup load, restart the inverter or wait for 5 minutes to automatically celar the fault.
100038	Output_DC_over_current	1. If it occurs occasionally, it is caused by a short-term abnormality of the power grid, and the inverter can automatically recover without processing. 2. If it continues to appear and the inverter cannot generate power normally, it can be judged that the inverter is faulty and contact customer service for further check.
100041	Output_DC_over_voltage	1. If it occurs occasionally, it is caused by a short-term abnormality of the power grid, and the inverter can automatically recover without processing. 2. If it continues to appear and the inverter cannot generate power normally, please contact the customer service center for further check.

Error No.	Error Description	Solution
100042	Output_short	Disconnect the Backup load and restart the inverter. If the fault can be cleared, then the load side is shorted; If the fault can't be cleared, please contact the customer service center for further check.
100043	Output_overload	1. The Backup load is overloaded, check whether the load connected to the backup terminal exceeds the overload limit, reduce the load, restart the inverter or wait for 5 minutes to automatically eliminate the fault; 2. Disconnect the Backup load, restart the inverter, and check whether the fault is cleared. If the fault can't be clear, please contact the customer service center for further check.
100046	DC_Input_Disturbance	1. If it happens occasionally, the inverter can recover automatically, no processing is required. 2. If it persists, please contact the customer service center for further check.
100052	Backup_ovp	1. If it happens occasionally, the inverter can recover automatically, no processing is required. 2. If it persists, please contact the customer service center for further check.
100054	Dc_bus_undervolt	1. If it happens occasionally, the inverter can recover automatically, no processing is required. 2. If it persists, please contact the customer service center for further check.
100058	AFCI_check_protect	1. Restart the system and check whether the fault persists. 2. If it persists, please contact the customer service center for further check.

100060	Dsp_selfcheck	Internal procedures are not compatible, please contact customer service for repair.
100122	EEPROM R/W Failure	1. If a remote upgrade has been performed and the inverter can return to normal operation, this is a normal result of the remote upgrade process and no processing is required; 2. If it continues to appear, please contact the customer service center for further check.
100123	DSP communication failure	1. The communication of the DCDC module is lost, contact the customer to upgrade the DCDC module remotely, and check whether the inverter is restored after the upgrade; 2. Try to completely power off the inverter about 10 minutes, then power on and restart to check whether the inverter is restored. 3. If the fault still exists, please contact customer service for further check.
100145	12V auxiliary power Fault	1. If it happens occasionally, the inverter can recover automatically, no processing is required. 2. If it continues to appear, it can be judged that the inverter is faulty and please contact customer service for further check.
100165	data storage error	1. If it happens occasionally, the inverter can recover automatically, no processing is required. 2. If it continues to appear, it can be judged that the inverter is faulty and please contact customer service for further check.

100166	inverter circuit abnormal	1. The inverter circuit fails to start, and the internal flag bit is not allowed to start up ,contact customer service to try restarting the inverter and check whether it is restored. 2. Contact customer service to remotely upgrade the program and check whether the inverter is restored. 3. If above two steps cannot restore the inverter, please try to turn off the inverter completely and restart the inverter. If it still cannot be restored, please contact customer service for further check
100167	boost circuit abnormal	1. Contact customer service to try restarting the inverter and check whether it is restored. 2. Contact customer service to remotely upgrade the program and check whether the inverter is restored. 3. If above two steps cannot restore the inverter, please try to turn off the inverter completely and restart the inverter. If it still cannot be restored, please contact customer service for further check.
110004	dc_power_alarm	The inverter is in the grid overvoltage derating state. This setting is related to the grid high voltage alarm. Please check the grid voltage and confirm the Level 1 overvoltage protection value setting with customer service.
110005	Battery stops running alarm	1. The inverter is shut down due to the shutdown command. Contact customer service to try restarting the inverter and check whether the inverter is restored. 2. Unplug the communication module and confirm whether the alarm can be cleared.

		If the alarm can be clear, contact customer service to replace the communication module.
Error No.	**Error Description**	**Solution**
110006	over_temperature_alarm	1. If it happens occasionally, the inverter can recover automatically, no processing is required. 2. If it occurs frequently or continuously, please check whether the installation site is exposed to direct sunlight, whether the ventilation is good, and whether the ambient temperature is too high (such as installed on a parapet). If the ambient temperature is lower than 45 degrees and the ventilation is good, please contact the customer service center for further check.
110014	Pv over voltage	1. Measure the open-circuit voltage of the actual configuration (the influence of the local minimum temperature should be considered when calculating the maximum open-circuit voltage), and compare it with the maximum full-load working voltage of the MPPT. 2. Check the number of solar panel modules and adjust the number if necessary.
110021	Grid Loss Alarm	1. If it occurs occasionally, it is a short-term abnormality of the power grid. The inverter will resume normal operation after detecting that the power grid is normal, and no processing is required. 2. If it occurs frequently but can be restored automatically, please contact the local power operator, after obtaining permission, modify the inverter grid protection parameter settings to a suitable value

		through the APP. 3. If it occurs frequently but cannot be recovered for a long time, please confirm: 1) Whether the AC circuit breaker disconnected 2) Whether the AC circuit breaker is damaged (measure whether the voltage of the inlet and outlet in the closed state is consistent) 3) Check whether the AC terminals are in good contact 4) Whether the power supply line is out of power
110022	Grid Volt Alarm	1. Check whether grid is abnormal. 2. Confirm whether the grid cable connection is normal. 3. Restart inverter and ensure whether the fault is existing.
110023	Grid Freq Alarm	1. If it occurs occasionally, it is a short-term abnormality of the power grid. The inverter will resume normal operation after detecting that the power grid is normal, and no processing is required. 2. If it occurs frequently but can be automatically recovered, you need to contact the local power operator. After obtaining permission, contact the custermer service center to modify the inverter grid protection parameter settings. 3. If it occurs frequently but cannot be recovered for a long time, please contact for repair.
110024	10min Grid Volt Alarm	The grid sliding average voltage exceeds the allowable range, check the grid voltage and sliding average voltage protection settings.

110027	LN Reverse Alarm	Check whether the mains live wire and neutral wire are reversed.
110029	GFCI Alarm	1. If it occurs frequently and accompanied by an insulation resistance alarm, please check according to the abnormal insulation resistance alarm guidence; 2. If it occurs frequently, accompanied by other alarms, and the inverter has been unable to connect to the grid for power generation, it can be judged that the inverter is faulty and contact customer service for further check.
110030	ISO Alarm	1. Restart the system and check whether the fault persists. 2. If it persists, please contact the customer service center for further check.
110034	Fan Abnormal Alarm	1. Check whether the internal temperature reaches 60 degrees when the fan alarm is confirmed through the Alpha-ESS APP or web server. If the alarm occurs before reaching 60 degrees, it is an alarm caused by an external fan. Otherwise, the internal fan is faulty. please contact customer service for further check. 2. If it is confirmed that it is an alarm caused by an external fan, power off the inverter and restart, and pay attention to observe whether the external fan will work, or whether there is a fan that is obviously slower than other fans. (1). Check whether the fan wiring is normal (reconnect/replace); (2). Check whether the fan blades are damaged or blocked (replace); (3). Check whether the fan body is adhered to foreign objects such as oil dirt and dust

		(replace). If there is no obvious abnormality in the fan, replace all external fans. If the problem cannot be solved, contact customer service for further check.
110036	FLASH ID Alarm	1. Restart the system and check whether the fault persists. 2. If it persists, please contact the customer service center for further check.
Error No.	**Error Description**	**Solution**
110037	ReadFlash Alarm	1. Restart the system and check whether the fault persists. 2. If it persists, please contact the customer service center for further check.
110039	Machine Type Alarm	The model in the firmware code does not match the physical model, please contact customer service for further check.
110040	Inv Volt Low Alarm	1. If it occurs in weak light conditions (such as early morning or dusk, and extreme weather such as rain and sandstorms), it is a normal phenomenon that the component voltage is low at this time, and no need to deal with it.. 2. If it occurs under the condition that the light is normal, please check whether there is a short circuit or open circuit in the solar panel string connection.
110048	No Pv Input Alarm	1. If the alarm occurs occasionally, possibly the external circuits are abnormal accidentally. The inverter automatically recovers to the normal operating status after the fault is rectified. 2. If the alarm occurs repeatedly or last a long time, check whether the insulation resistance against the ground of solar panel

		strings is too low. 3. Check whether the solar panel string is shielded. 4. If the PV string is clean and not shielded, check whether the PV modules are aging or deteriorated.
110049	Input Power Limit Alarm	Normal in low light conditions, no processing is required.
110050	Output Power Limit Alarm	1. Restart the system and check whether the fault can be cleared. 2. If the fault can't be cleared, please contact the customer service center for turther check.
110059	grid waveform abnormal alarm	1. If it occurs occasionally, it is a short-term abnormality of the power grid. The inverter will resume normal operation after detecting that the power grid is normal, and no processing is required. 2. If it occurs frequently but can be recovered automatically, please contact the local power operator, and after obtaining permission, modify the inverter grid protection parameter settings. 3. If it occurs frequently but cannot be recovered for a long time, please contact the customer service center for turther check.

10.2.2. Battery Protection Description

LED Indictor	Protection Code	LED Display	Description	Troubleshooting
Green LEDs flicker once every 3S.	1		Temperature difference	Wait for automated recovery. In case the problem is not recovery for a long time, call for service.
	3		High temperature	Stop discharging and charging until this code is eliminated and wait for the temperature to drop.
	4		Low-temperature discharge	Stop discharging until this code is eliminated and wait for the temperature to rise.
	5		Overcurrent charge	Wait for automated recovery. In case the problem is not recovery for a long time, call for service.
	6		Overcurrent discharge	
	8		Cell overvoltage	
	9		Cell under voltage	Stop charging and call service immediately.
	11		Low-temperature charge	Stop charging until this code is eliminated and wait for the temperature to rise.

NOTE

In the case of work mode, if the protection code 9 appears, please press the power button of the battery 5 times within 10 seconds, the BMS will be forced to turn on the MOSFET of discharge so that the inverter can detect the battery open voltage and charge the battery.

10.2.3. Battery Error Description

LED Indictor	Error Code	LED display	Description	Troubleshooting
Red LEDs flicker once every 3S.	Error 01	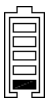	Temperature sensor failure	Please restart the battery. If the problem is not resolved, please call for service.
	Error 05		MOSFET error	
	Error 06		Circuit breaker open	Switch on circuit breaker after powering off the battery.
	Error 08		LMU disconnect (slave)	Reconnect the BMS communication cable.
	Error 09		SN missing	Call for service.
	Error 10		LMU disconnect (master)	Reconnect the BMS communication cable.
	Error 11		Software version inconsistent	Call for service.
	Error 12		Multi master	After switching off the battery system, please restart all batteries within 30s.
	Error 13		MOS overtemperature	Please first switch off the battery and then switch on the battery after about 2 hours.

11. Uninstallation & Return

11.1. Removing the Product

Procedure

- Step 1: Power off the energy storage system by following instructions in Chapter 8.2 Powering Off the System.
- Step 2: Disconnect all cables from the product, including communication cables, PV power cables, battery power cables, AC cables, and PE cables.
- Step 3: Remove the WiFi module.
- Step 4: Remove the product from the wall bracket. Remove the expansion battery from the wall bracket.
- Step 5: Remove the wall brackets.

11.2. Packing the Product

If the original packaging is available, put the product inside it and then seal it using adhesive tape.

If the original packaging is not available, put the product inside a suitable cardboard box and seal it properly.

11.3. Disposing of the Product

- If the product service life expires, dispose of it according to the local disposal rules for electrical equipment and electronic component waste.
- Dispose of the packaging and replaced parts according to the rules at the installation site where the device is installed.
- Do not dispose the product with normal domestic waste.



12. Specification

12.1. Datasheet of Inverter SMILE5-INV

Model	SMILE5-INV
Input DC (PV side)	
Recommended max. PV power	7.5 kW
Max. PV input voltage	550V
Rated voltage	360V
Start-up voltage	90V
MPPT voltage range	70~540V
Max. input current Per MPPT	15A/15A
Max. short circuit current per MPPT	18A/18A
MPPT number	2
Max input strings number per MPPT	1 / 1
Battery (Inverter side)	
Battery type	Li-ion
Battery voltage range	42 ~ 60 V
Maximum charge/ discharge power	5 kW
Maximum charge/ discharge current	100 A / 100 A
Communication	CAN
Output AC (Back-up side)	
Rated output power	5 kW
Back-up switch time	<20 ms
Rated output voltage	L/N/PE, 230 V
Rated frequency	50/60 Hz
Rated output current	21.7 A
THDv(@linear load)	2%
Input AC (Grid side)	
Phase	Single phase
Rated input voltage	L/N/PE, 230 V
Rated frequency	50/60 Hz
Rated Input power	7.5 kW
Max. input current	32.6 A
Output AC (Grid side)	
Rated output power	5 kW
Max. apparent output power	5.5 kVA
Phase	Single phase

Rated grid voltage	L/N/PE，230 V
Rated grid frequency	50 / 60 Hz
Rating grid output current	21.7 A
Power factor	>0.99 (0.8 leading - 0.8 lagging)
THDi	< 2%
Protection class	I
Overvoltage category	III
Efficiency (Inverter side)	
Max. efficiency (PV to AC)	>97.3%
Max. efficiency (BAT to AC)	>94.0%
Protection (Inverter side)	
PV reverse-polarity protection	Integrated
Anti-Islanding protection	Integrated
Insulation resistance Detection	Integrated
Residual current monitoring unit	Integrated
Output overcurrent protection	Integrated
Output short circuit protection	Integrated
Output overvoltage protection	Integrated
Battery reverse protection	Integrated
Battery breaker	Integrated
Features	
AC connection	Plug in connector, Vaconn
PV connection	Plug in connector, Vaconn
BAT connection	Plug in connector, Amphenol
Communication	LAN, WiFi (optional)
Warranty	5 years standard /10 years (optional)
General Data	
Display	LCD
Dimensions (W*H*D)	610*695*250 mm
Weight	30 kg
Topology	Transformerless
Operation temperature range	-25 ~ +60 °C
Ingress protection	IP65
Relative humidity	0 ~ 100%
Noise emission	<35 dB(A) @1m
Cooling Concept	Natural Convection
Max. operation altitude	4000 m

12.2. Datasheet of Battery

Model	M4856-P
Battery type	LFP (LiFePO4)
Weight	32 kg
Dimension (W*D*H)	610 * 226 * 302 mm
Ingress protection	IP21 / IP65
Energy capacity	2.9 kWh
Usable capacity	2.8 kWh
DoD	96%
Nominal voltage	51.2 V
Operating voltage range	48 ~ 57.6 V
Internal resistance	≤15 mΩ
Max. Charging/discharging current *	56 A
Operating temperature range	Charge：0＜T＜50℃ / Discharge：-10＜T＜50℃
Monitoring parameters	System voltage, current, cell voltage,cell temperature, PCBA temperature
BMS communication	CAN and RS485 compatible
System	
Safety	IEC62040-1, IEC62109-1/-2.AS3100, NB/T 32004,
EMC standard	EN61000-6-1/-2/-3/-4
Warranty	5 Year product warranty,10 Year performance warranty
Transportation	UN38.3

* Max. charge/discharge current derating will occur related to temperature and SOC.

Model	SMILE5-BAT	SMILE-BAT-5.8P
Battery type	LFP (LiFePO4)	LFP (LiFePO4)
Weight	73 kg	69 kg
Dimension (W*D*H)	610 * 207 * 629 mm	610 * 207 * 629 mm
Ingress protection	IP21 / IP65	IP21
Energy capacity	5.7 kWh	5.8 kWh
Usable capacity	5.5 kWh	5.2 kWh
DoD	96%	90%
Nominal voltage	51.2 V	48 V
Operating voltage range	48 ~ 57.6 V	45 ~ 54 V
Internal resistance	≤ 20 mΩ	≤ 15 mΩ
Max. Charging /discharging current *	56 A	56 A
Operating temperature range	Charge：0＜T＜50℃ / Discharge：-10＜T＜50℃	
Monitoring parameters	System voltage, current, cell voltage, cell temperature, PCBA temperature	
BMS communication	CAN and RS485 compatible	
System		
Safety	IEC62040-1, IEC62109-1/-2.AS3100, NB/T 32004,	
EMC standard	EN61000-6-1/-2/-3/-4	
Warranty	5 Year product warranty, 10 Year performance warranty	
Transportation	UN38.3	

* Max. charge/discharge current derating will occur related to temperature and SOC.

Model	SMILE-BAT-10.1P	SMILE-BAT-10.3P	SMILE-BAT-13.3P
Battery type	LFP (LiFePO4)		
Weight	95 kg	97 kg	121 kg
Dimension (W*D*H)	610 * 236 * 693 mm	610 * 236 * 737 mm	610 * 236 * 816mm
Ingress protection	IP65	IP21	IP65
Energy capacity	10.1 kWh	10.3 kWh	13.3 kWh
Usable capacity	9.7 kWh	9.9 kWh	13.3 kWh
DoD	96%	96%	100%
Nominal voltage	48 V	51.2 V	48 V
Operating voltage range	45 ~ 54 V	48 ~ 57.6 V	45 ~ 54 V
Internal resistance	≤ 20 mΩ	≤ 15 mΩ	≤ 20 mΩ
Max. Charging /discharging current *	100A		
Operating temperature range	Charge：0＜T＜50℃ / Discharge：-10＜T＜50℃		
Monitoring parameters	System voltage, current, cell voltage, cell temperature, PCBA temperature		
BMS communication	CAN and RS485 compatible		
System			
Safety	IEC62040-1, IEC62109-1/-2.AS3100, NB/T 32004,		
EMC standard	EN61000-6-1/-2/-3/-4		
Warranty	5 Year product warranty, 10 Year performance warranty		
Transportation	UN38.3		

* Max. charge/discharge current derating will occur related to temperature and SOC.

13. Appendix 1: System Overview

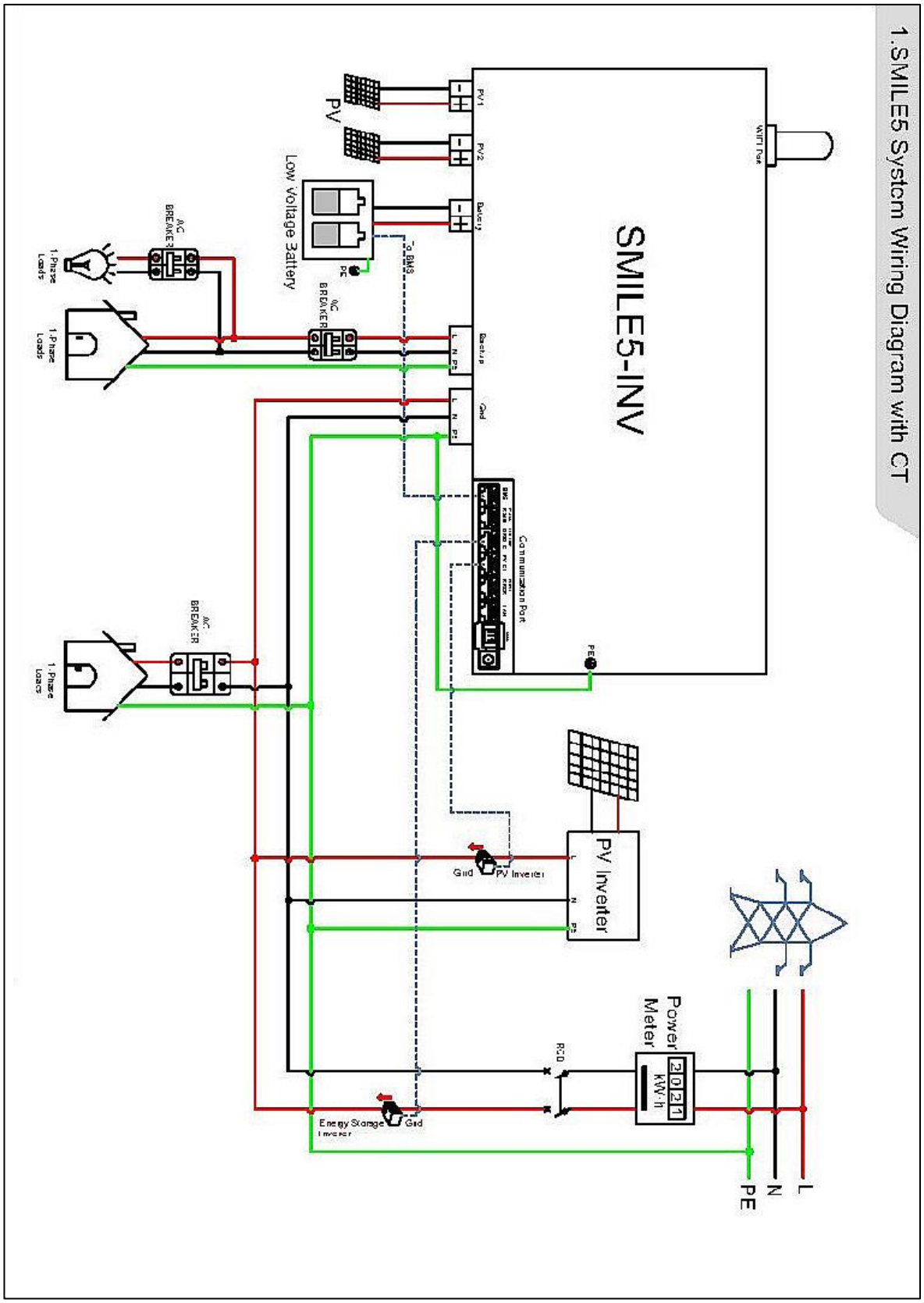

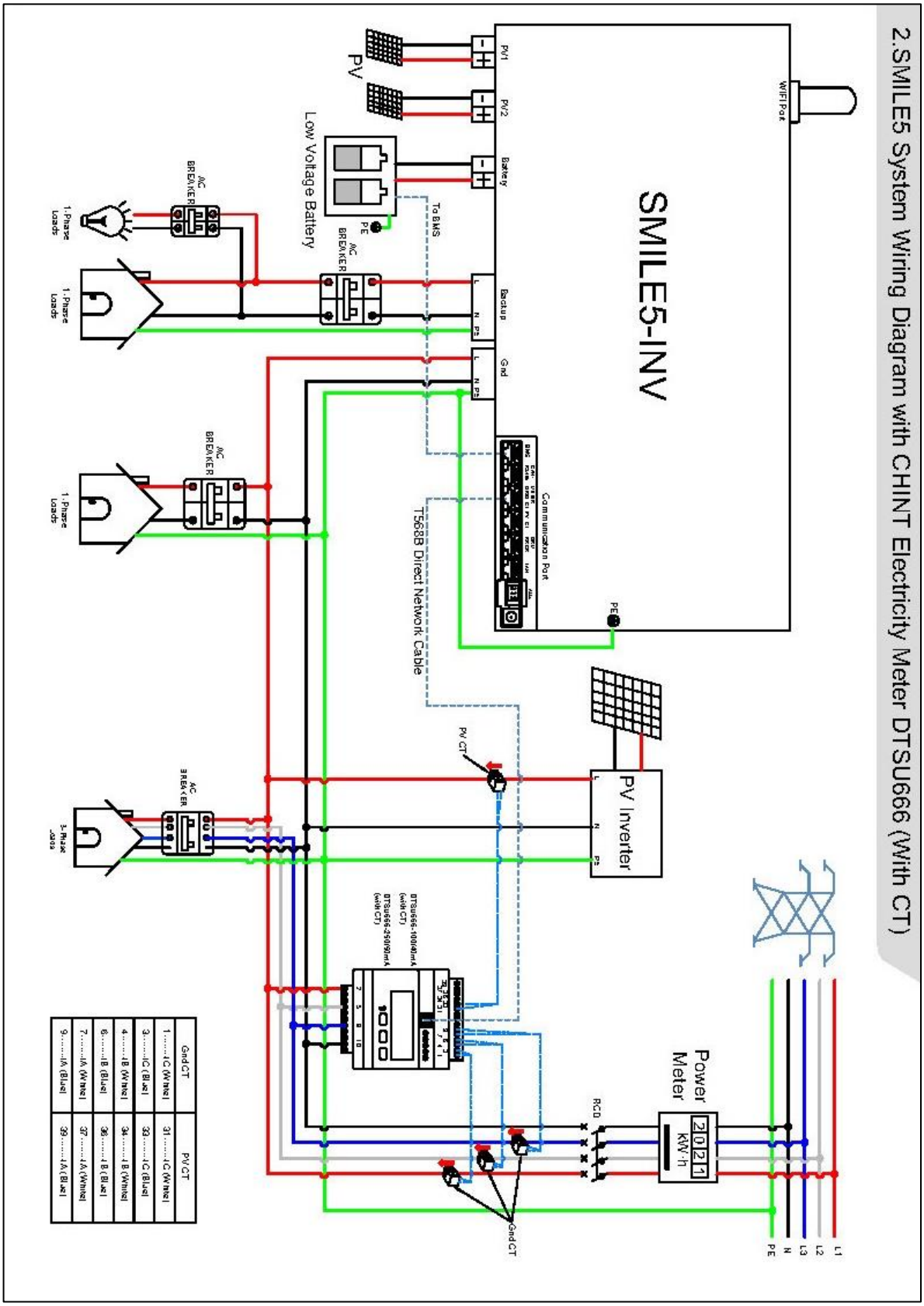
2.SMILE5 System Wiring Diagram with CHINT Electricity Meter DTSU666 (With CT)
SMILE5-INV
PV
Low Voltage Battery
PV Inverter
Power Meter
T568B Direct Network Cable
Communication Port
WIFI Port
PV1
PV2
Battery
Backup
Gnd
To BMS
PE
AC BREAKER
1-Phase Loads
3-Phase Loads
PV CT
Gnd CT
RCD
L1
L2
L3
N
PE

3.SMILE5 System Wiring Diagram with CHINT Electricity Meter DTSU666 (Without CT)

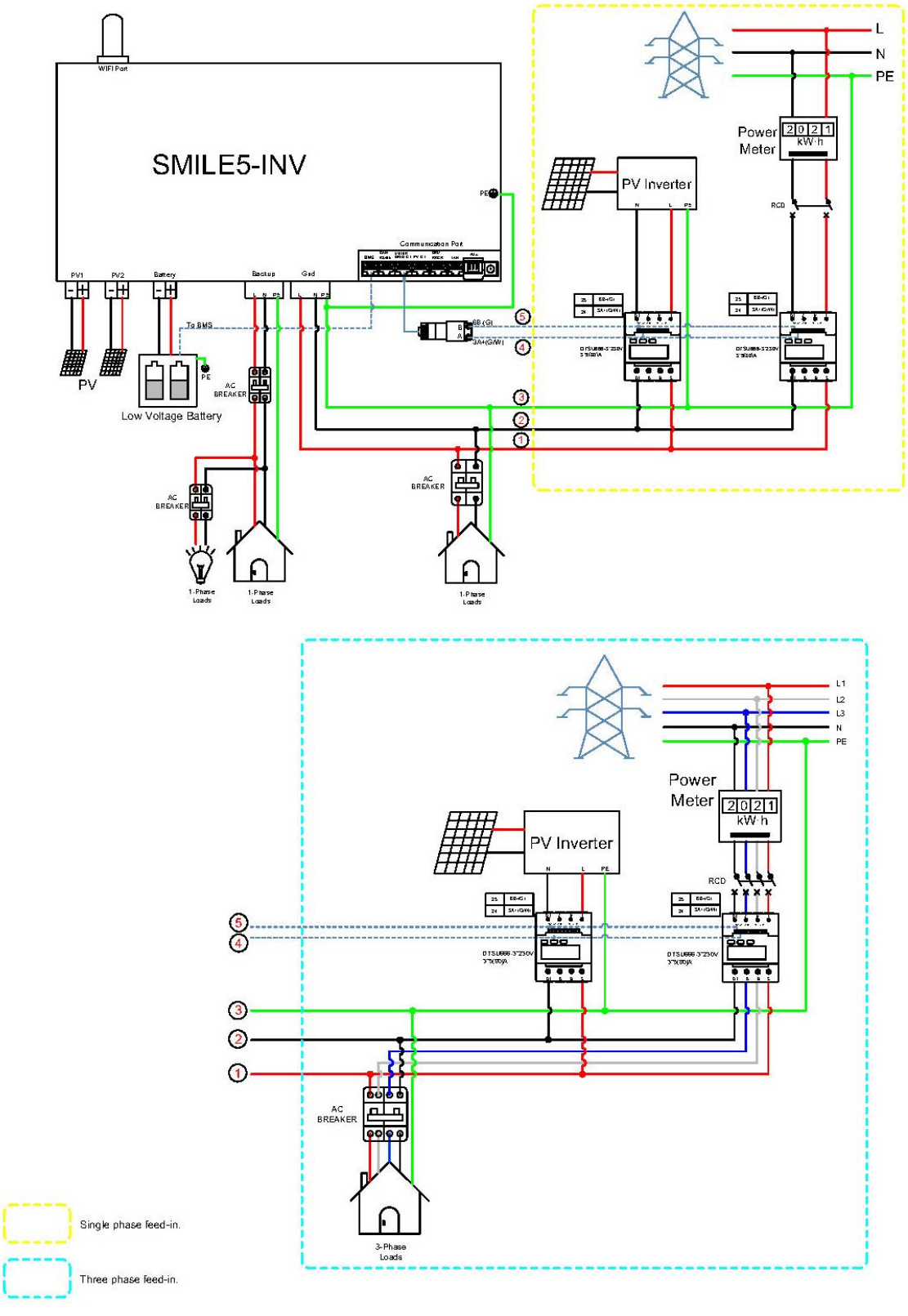

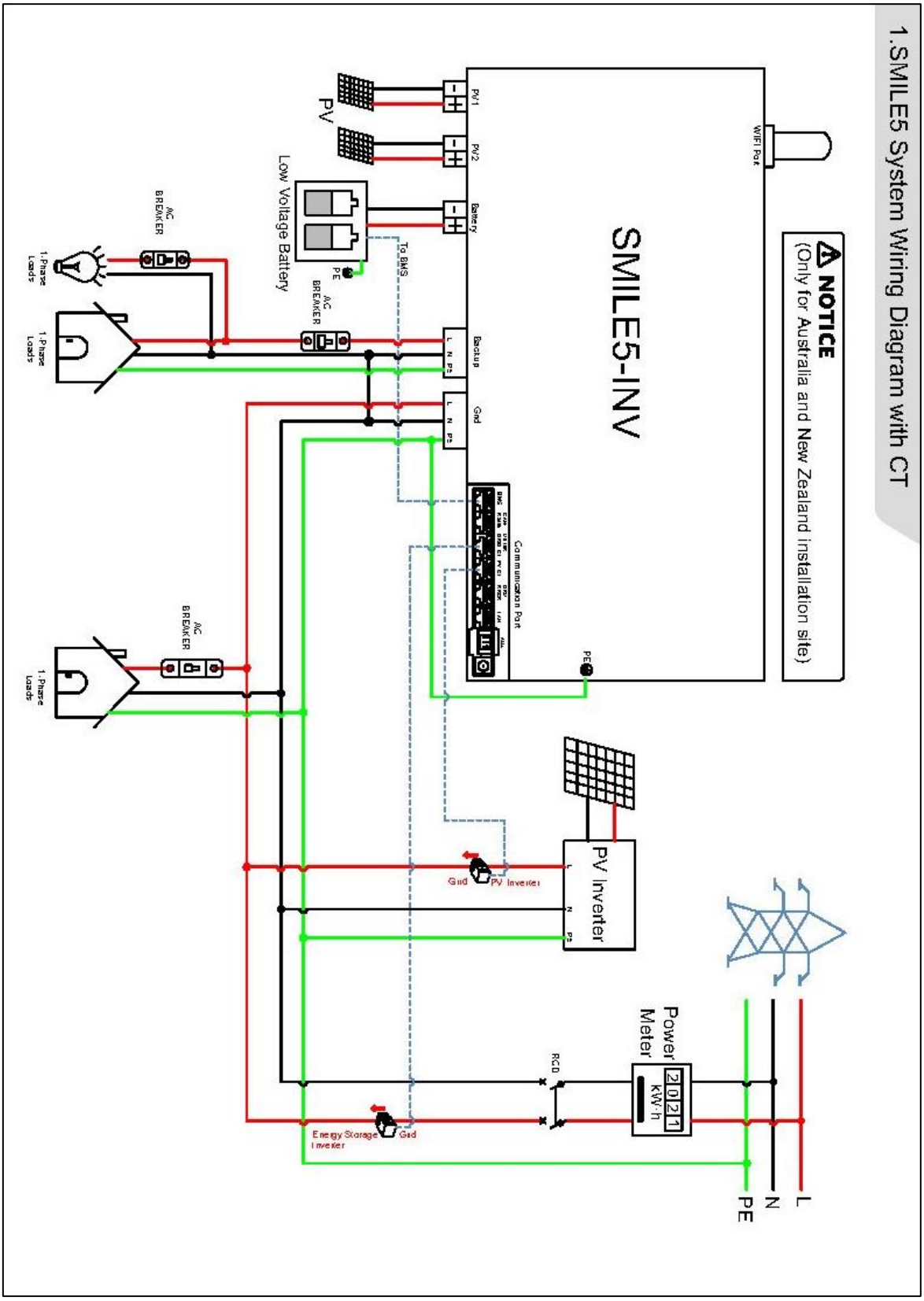
1.SMILE5 System Wiring Diagram with CT
NOTICE
(Only for Australia and New Zealand installation site)
SMILE5-INV
WiFi Port
PV1
PV2
Battery
Backup
Grid
Communication Port
PE
PV
Low Voltage Battery
To BMS
AC BREAKER
1-Phase Loads
PV Inverter
Grid
Power Meter
kWh
RCD
Energy Storage Inverter
L
N
PE

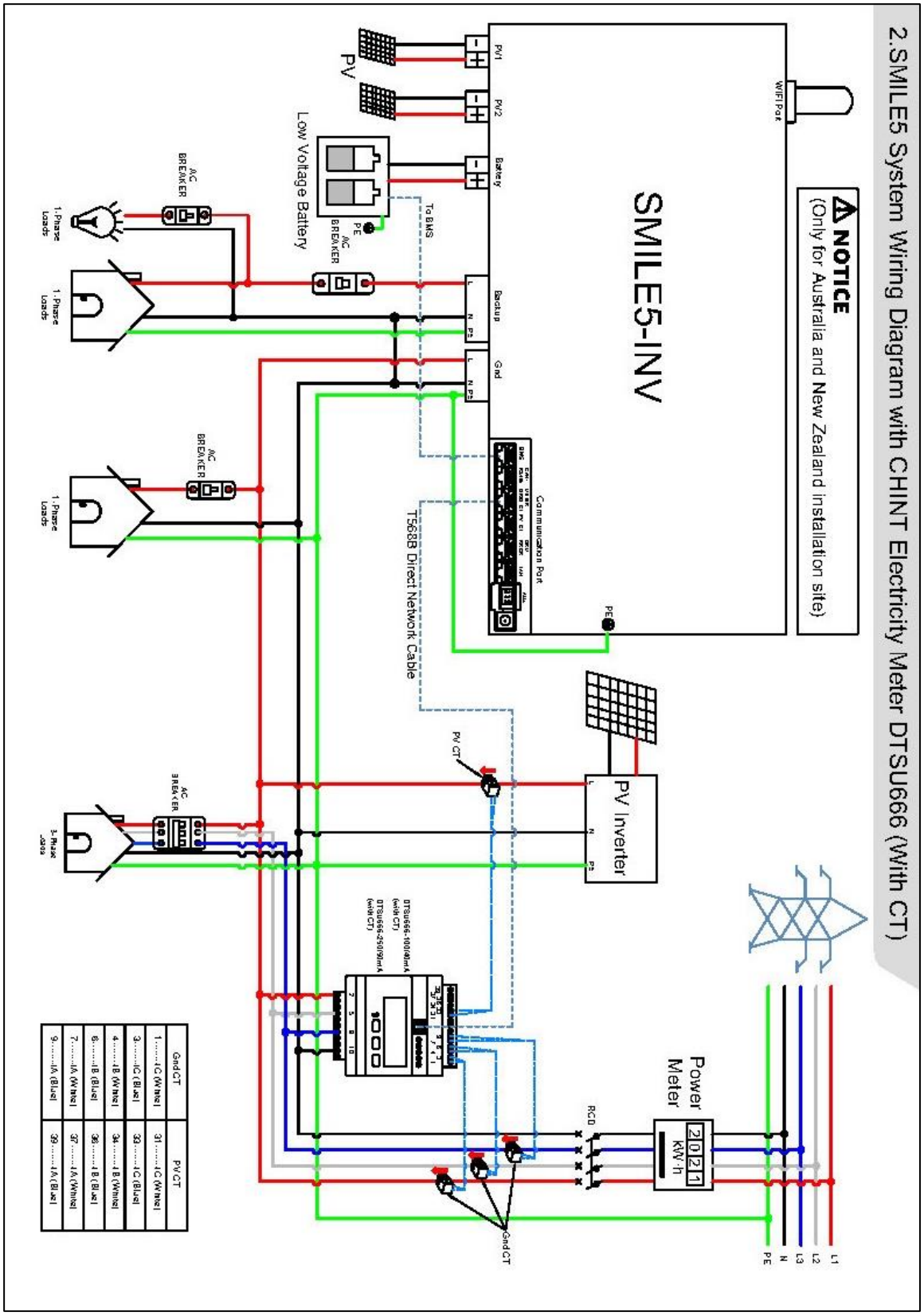
2.SMILE5 System Wiring Diagram with CHINT Electricity Meter DTSU666 (With CT)
NOTICE
(Only for Australia and New Zealand installation site)
SMILE5-INV
WIFI Port
PV1
PV2
Battery
Backup
Gnd
Communication Port
PE
PV
Low Voltage Battery
To BMS
AC BREAKER
1-Phase Loads
T568B Direct Network Cable
PV Inverter
PV CT
3-Phase Loads
Power Meter
RCD
GndCT
L1
L2
L3
N
PE
GndCT
PV CT
1.....IC (White)
2.....IC (Blue)
3.....IC (Blue)
4.....IB (White)
5.....IB (Blue)
6.....IB (Blue)
7.....IA (White)
8.....IA (Blue)
9.....IA (Blue)
31.....IC (White)
32.....IC (Blue)
33.....IC (Blue)
34.....IB (White)
35.....IB (Blue)
36.....IB (Blue)
37.....IA (White)
38.....IA (Blue)
39.....IA (Blue)

3.SMILE5 System Wiring Diagram with CHINT Electricity Meter DTSU666 (Without CT)

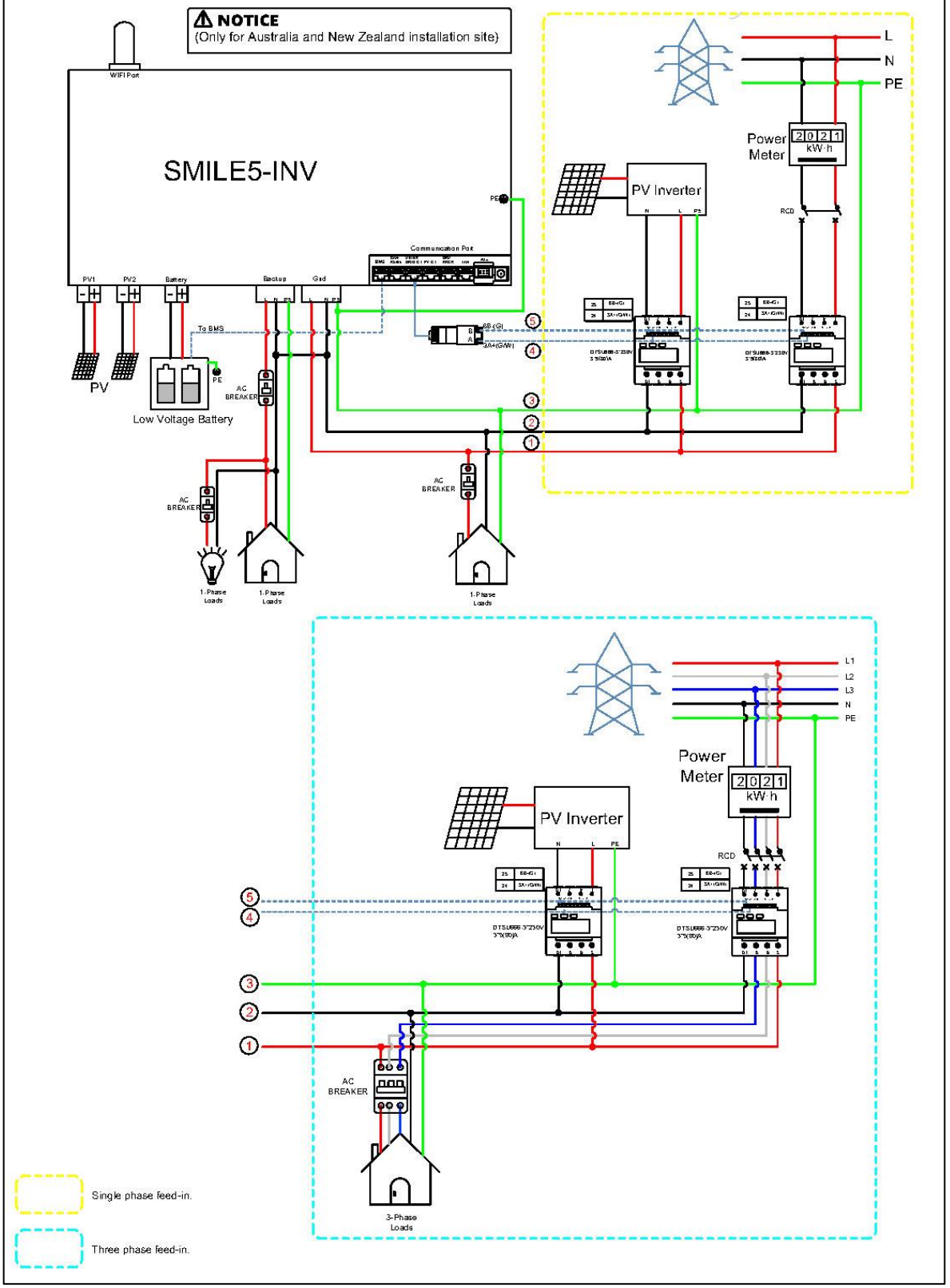

14. Appendix 2: Regional Application Standard

Please check with your local grid company and choose the correspond Regional Application Standard, the power quality modes Volt-var and Volt-Watt will be running automatically. (Only for regions with AS/NZW 4777.2 safety regulations).

Regional application Standard	Electric Company
Australia A	N/A
Australia B	N/A
Australia C	N/A
New Zealand	N/A
Vector	New Zealand Vector

@AlphaEnergyStorageSystem @AlphaESS @alpha_ess @AlphaESS www.alphaess.com

Alpha ESS Co., Ltd.

+86 513 8060 6891
info@alpha-ess.com
www.alphaess.com
Jiuhua Road 888, Nantong High-Tech Industrial Development Zone, Nantong City, 226300

Alpha ESS Suzhou Co., Ltd.

+86 512 6828 7609
info@alpha-ess.com
www.alphaess.com
Building 10-A, Canal Town Industrial Park, 99 Taihu E Rd, Wuzhong District, Suzhou 215000

Alpha ESS Europe GmbH

+49 610 3459 1601
europe@alpha-ess.de
www.alphaess.de
Paul-Ehrlich-Straße 1a, D-63225 Langen, Hessen

Alpha ESS Australia Pty. Ltd.

+61 402 500 520 (Sales)
+61 1300 968 933 (Technical Support)
info@alpha-ess.com
www.alphaess.com

Alpha ESS Italy S.r.l.

+39 339 462 4288
info@alpha-ess.it
www.alphaess.com
Via Don Minzoni, 17, Calenzano Firenze 50041

Alpha ESS Korea Co., Ltd

info@alpha-ess.com
2F, 19-4, Nohyeong 11-gil, Jeju-si, Jeju-do, Republic of Korea

Alpha ESS UK Co., Ltd

+44 145 354 5222
info@alpha-ess.com
Drake House, Long Street, Dursley, gl11 4hh

Alpha ESS International Pte. Ltd.

+65 6513 1125 / +65 6513 1126
Singapore@alpha-ess.com
2 Corporation Road #01-06A Corporation Place Singapore 618494

Alpha ESS USA, Inc.

+1 408 368 7828
usa@alpha-ess.com
Unit 5 2180 S Ivanhoe St, Denver, CO 80222