@AlphaEnergyStorageSystem @AlphaESS @alpha_ess @AlphaESS www.alpha-ess.com

Alpha ESS Co., Ltd.
+86 513 8060 6891
info@alpha-ess.com
www.alpha-ess.com
JiuHua Road 888, High-Tech Industrial Development Zone 226300 Nantong City, Jiangsu Province

Alpha ESS Suzhou Co., Ltd.
+86 512 6828 7609
info@alpha-ess.com
www.alpha-ess.com
Building 10-A, Canal Town Industrial Park, 99 Taihu E Rd, Wuzhong District, Suzhou 215000

Alpha ESS Europe GmbH
+49 610 3459 1601
europe@alpha-ess.de
www.alpha-ess.de
Paul-Ehrlich-Straße 1a 63225 Langen

Alpha ESS Australia Pty. Ltd.
+61 1300 968 933
australia@alpha-ess.com
www.alpha-ess.com.au
Unit 1, 2 Ralph Street Alexandria NSW 2015

Alpha ESS Italy S.r.l.
+39 599 239 50
info@alpha-ess.it
www.alpha-ess.it
Via Loda,17-41013 Castelfranco Emilia(MO)

Alpha ESS Korea Co., Ltd
+82 64 721 2004
korea@alpha-ess.com
2F, 19-4, Nohyeong 11-gil, Jeju-si, Jeju-do, Republic of Korea

Alpha ESS UK Co., Ltd
uk@alpha-ess.com
Drake House, Long Street, Dursley, gl11 4hh

Alpha ESS International Pte. Ltd.
Singapore@alpha-ess.com
Blk 55 Ayer Rajah Crescent #01-01, Singapore 139949

Alpha ESS USA, Inc.
USA@alpha-ess.com
638 S Ahwanee Ter Sunnyvale, California, 94085 United States of America

Alpha·ESS
your smart energy

V03

INSTALLATION MANUAL OF ENERGY STORAGE SYSTEM (ESS)

SMILE-S6-HV



Copyright Statement

This manual is under the copyright of Alpha ESS Co., Ltd. with all rights reserved. Please keep the manual properly and operate in strict accordance with all safety and operating instructions in this manual. Please do not operate the product before reading through the manual.

CONTENT

01 INFORMATION ON THIS DOCUMENT 01

1.1 Information on this Document 01
1.2 Target Group 01
1.3 Levels of Warning Messages 01
1.4 Nomenclature 02

02 SAFETY 03

2.1 Intended Use of the Inverter 03
2.2 Safety Precaution for Battery Pack 03
2.2.1 General safety precautions 03
2.2.2 Response to emergency situations 04
2.3 Important Safety Instructions 05
2.4 Symbols on the label 08

03 PRODUCT INTRODUCTION AND APPLICATION SCENARIOS 10

3.1 Inverter Description 10
3.2 Battery Pack Description 12
3.3 Application Scenarios 13

04 STORAGE 16

4.1 Inverter Storage 16
4.2 Battery Storage 16

05 UNPACKING 17

5.1 Checking the Outer Packing 17
5.2 Scope of Delivery 17

06 MOUNTING 20

6.1 Requirements for Mounting 20
6.2 Preparing Tools and Instruments 22
6.3 Mounting the SMILE-BAT-8.2PH and Inverter 23
6.4 Mounting the SMILE-BAT-5PH and Inverter 29
6.5 Mounting the WiFi Module 33

07 ELECTRICAL CONNECTION 34

7.1 Overview of the Connection Area 34

7.2 Preparing Cables 37
7.3 Connecting Additional Grounding 38
7.4 AC Connection 39
7.5 Communication Connection 50
7.6 PV Connection 52
7.7 Battery Power Connection 53
7.8 Battery Pack Expansion Connection 54

08 WIFI SETTING 56

8.1 Download and Install APP 56
8.2 Overview of Functions for Installer Account 57
8.3 WiFi Module Setting 58

09 COMMISSIONING 61

9.1 Checking Before Power-On 61
9.2 Check the Running State 61
9.3 Powering Off the Product 62

10 MAINTENANCE AND TROUBLESHOOTING 63

10.1 Routine Maintenance 63
10.2 Troubleshooting 64

11 UNINSTALLATION & RETURN 69

11.1 Removing the Product 69
11.2 Packing the Product 69
11.3 Disposing of the Product 69

12 SPECIFICATION 70

12.1 Datasheet of Hybrid Inverter SMILE-S6-HV-INV 70
12.2 Datasheet of Battery Pack SMILE-BAT-8.2PH 72
12.3 Datasheet of Battery Pack SMILE-BAT-5PH 73
Appendix 1:Communication Connection Figure 74
Appendix 2: Regional application Standard 75

01 Information on this Document

1.1 Content and Structure of this Document

This document is valid for product of SMILE-S6-HV which include inverter SMILE-S6-HV-INV, battery pack SMILE-BAT-8.2PH or SMILE-BAT-5PH.
This document describes the mounting, installation, commissioning, configuration, operation, troubleshooting and decommissioning of the product as well as the operation of the product user interface.
Observe all documentation that accompanies the product, keep them in a convenient place and available at all times.
Illustrations in this document are reduced to the essential information and may deviate from the real product.

1.2 Target Group

This document is intended for qualified persons and end users. Only qualified persons are allowed to perform the activities marked in this document with a warning symbol. Tasks that do not require any particular qualification are not marked and can also be performed by end users. Qualified persons must have the following skills:

- Knowledge of how an inverter works and operates.
- Training in how to deal with the dangers and risks associated with installing and using electrical devices, batteries and systems.
- Training in the installation and commissioning of electrical devices and systems
- Knowledge of the applicable standards and directives.
- Knowledge of and compliance with this document, including all safety precautions.
- Knowledge of and compliance with the documents of the battery manufacturer, including all safety precautions.

1.3 Levels of Warning Messages

The following levels of warning messages may occur when handling the product.

DANGER

DANGER indicates a hazardous situation which, if not avoided, will result in death or serious injury.

WARNING

WARNING indicates a hazardous situation which, if not avoided, could result in death or serious injury.

CAUTION

CAUTION indicates a hazardous situation which, if not avoided, could result in minor or moderate injury.

NOTICE
NOTICE indicates a situation which, if not avoided, can result in property damage.

INFORMATION provides tips which are valuable for the optimal installation and operation of the product.

1.4 Nomenclature

Complete designation	Designation in this document
SMILE-S6-HV-INV (INDOOR)	Inverter (INDOOR)
SMILE-S6-HV-INV (OUTDOOR)	Inverter (OUTDOOR)
SMILE-S6-HV-INV with SMILE-BAT-8.2PH or SMILE-BAT-5PH	Product

02 Safety

2.1 Intended Use of the Inverter

The inverter, the battery pack, the energy meters make up a system for optimization of self-consumption in a household. The inverter is equipped with two MPP trackers and converts the direct current from the PV array into grid-compliant single-phase current and feeds it into the utility grid. The battery pack is used for the intermediate storage of the energy.
The product is suitable for indoor and outdoor use.
The product must only be operated with PV arrays of protection class II in accordance with IEC 61730, application class A. The PV modules must be compatible with this product.
PV modules with a high capacity to ground must only be used if their coupling capacity does not exceed 1.0 µF.
All components must remain within their permitted operating ranges at all times.
Use this product only in accordance with the information provided in the enclosed documentation and with the locally applicable standards and directives. Any other application may cause personal injury or property damage.
Alterations to the product, e.g. changes or modifications, are only permitted with the express written permission of AlphaESS. Unauthorized alterations will void guarantee and warranty claims. AlphaESS shall not be held liable for any damage caused by such changes.
Any use of the product other than that described in the Intended Use section does not qualify as appropriate.
The enclosed documentation is an integral part of this product. Keep the documentation in a convenient place for future reference and observe all instructions contained therein.
The type label must remain permanently attached to the product.

2.2 Safety precaution for Battery Pack

2.2.1 General safety precautions

Overvoltage or wrong wiring can damage the battery pack and cause deflagration, which can be extremely dangerous.
All types of breakdown of the battery may lead to a leakage of electrolyte or flammable gas.
Battery pack is not user serviceable. High voltage is present in the device.
Read the label with Warning Symbols and Precautions, which is on the right side of the battery pack.
Do not connect any AC conductors or PV conductors which should be only connected to the inverter directly to the battery pack.
Do not charge or discharge damaged battery.
Do not damage the battery pack in such ways as dropping, deforming, impacting, cutting or penetrating with a sharp object. It may cause a leakage of electrolyte or fire.
Do not expose battery to open flame.

2.2.2 Response to emergency situations

The battery pack comprises multiple batteries that are designed to prevent hazards resulting from failures. However, AlphaESS cannot guarantee their absolute safety.

- If a user happens to be exposed to internal materials of the battery cell due to damage on the outer casing, the following actions are recommended.
  Inhalation: Leave the contaminated area immediately and seek medical attention.
  Eye contact: Rinse eyes with running water for 15 minutes and seek medical attention.
  Contact with skin: Wash the contacted area with soap thoroughly and seek medical attention.
  Ingestion: Induce vomiting and seek medical attention.

If a fire breaks out in the place where the battery pack is installed, perform the following countermeasures:

- Fire extinguishing media.
  Respirator is not required during normal operations.
  Use FM-200 or CO2 extinguisher for battery fire.
  Use an ABC fire extinguisher, if the fire is not from battery and not spread to it yet.

- Firefighting instructions
  1. If fire occurs when charging batteries, if it is safe to do so, disconnect the battery pack circuit breaker to shut off the power to charge.
  2. If the battery pack is not on fire yet, extinguish the fire before the battery pack catches fire.
  3. If the battery pack is on fire, do not try to extinguish but evacuate people immediately.

WARNING

There may be a possible explosion when batteries are heated above 150°C.
When the battery pack is burning, it leaks poisonous gases. Do not approach.

- Effective ways to deal with accidents
  On land: Place damaged battery into a segregated place and call local fire department or service engineer.
  In water: Stay out of the water and don't touch anything if any part of the battery, inverter, or wiring is submerged.
  Do not use submerged battery again and contact the service engineer.

2.3 Important Safety Instructions

This section contains safety precautions that must be observed at all times when working on or with the product.
To prevent personal injury and property damage and to ensure long-term operation of the product, read this section carefully and follow all safety precautions at all times.

DANGER

Danger to life due to electric shock when live components or cables are touched.
High voltages are present in the conductive components or cables of the product. Touching live parts and cables results in death or lethal injuries due to electric shock.

- Do not touch non-insulated parts or cables.
- Disconnect the product from voltage sources and make sure it cannot be reconnected before working on the inverter or the battery pack.
- After disconnection, wait 5 minutes until the capacitors have discharged.
- Do not open the product.
  Wear suitable personal protective equipment for all work on the product.

DANGER

Danger to life due to electric shock when live components or DC cables are touched.
When exposed to sunlight, the PV array generates high DC voltage which is present in the DC conductors. Touching the live DC cables results in death or lethal injuries due to electric shock.

- Disconnect the inverter from voltage sources and make sure it cannot be reconnected before working on the device.
- Do not touch non-insulated parts or cables.
- Do not disconnect the DC connectors under load.
- Wear suitable personal protective equipment for all work on the inverter.

DANGER

Danger to life due to electric shock from touching an ungrounded PV module or array frame.
Touching ungrounded PV modules or array frames results in death or lethal injuries due to electric shock.

- Connect and ground the frame of the PV modules, the array frame and the electrically conductive surfaces so that there is continuous conduction. Observe the applicable local regulations.

DANGER

Danger to life due to electric shock when touching live system components in case of a ground fault.

If a ground fault occurs, parts of the system may still be live. Touching live parts and cables results in death or lethal injuries due to electric shock.

- Disconnect the product from voltage sources and make sure it cannot be reconnected before working on the device.
- Touch the cables of the PV array on the insulation only.
- Do not touch any parts of the substructure or frame of the PV array.
- Do not connect PV strings with ground faults to the inverter.

DANGER

Danger to life due to high voltages on the Battery Pack

Lethal voltage is present at the pin connector for the power cable. Reaching into the pin connector for the power cable can result in lethal electric shock.

- Do not open the battery pack.
- Do not wipe over the battery pack with a damp cloth.
- Leave the protective caps on the pin connectors for the batteries power connection until the inverter cables are connected to the battery pack.
- Disconnect the product from voltage sources and make sure it cannot be reconnected before working on the inverter or the battery pack.

WARNING

Risk of chemical burns from electrolyte or toxic gases

During normal operation, no electrolyte can leak from the battery pack and no toxic gases can form. Despite careful construction, if the battery pack is damaged or a fault occurs, it is possible that electrolyte may be leaked or toxic gases formed.

- Store the battery pack in a cool and dry place.
- Do not drop the battery pack or damage it with sharp objects.
- Only set the battery pack down on its back or its bottom, i.e., on the side with the mounting lugs.
- Do not open the battery pack.
- Do not install or operate the battery pack in potentially explosive atmosphere or areas of high humidity.
- If moisture has penetrated the battery pack (e.g. due to a damaged enclosure), do not install or operate the battery pack.
- In case of contact with electrolyte, rinse the affected areas immediately with water and consult a doctor without delay.

CAUTION

Risk of burns due to hot heatsink and housing

The heatsink and housing can get hot during operation.

- During operation, do not touch any parts other than the cover of the inverter.

NOTICE

Damage to the inverter due to electrostatic discharge

- Touching electronic components can cause damage to or destroy the inverter through electrostatic discharge.
- Ground yourself before touching any component.

NOTICE

Damage due to cleaning agents

The use of cleaning agents may cause damage to the product and its components.

- Clean the product and all its components only with a cloth moistened with clear water.

2.4 Symbols on the label

Symbols on the type label of the inverter

Symbol	Explanation
	Beware of a danger zone This symbol indicates that the product must be additionally grounded if additional grounding or equipotential bonding is required at the installation site.
	Beware of electrical voltage The product operates at high voltages.
	Beware of hot surface The product can get hot during operation.
	Danger to life due to high voltages in the inverter, observe a waiting time of 5 minutes High voltages that can cause lethal electric shocks are pre-sent in the live components of the inverter. Prior to performing any work on the inverter, disconnect it from all voltage sources as described in this document.
	WEEE designation Do not dispose of the product together with the household waste but in accordance with the disposal regulations for electronic waste applicable at the installation site.
	Observe the documentation
	Certified safety The product is TUV-tested and complies with the require-ments of the EU Equipment and Product Safety Act.
	CE marking The product complies with the requirements of the applicable EU directives.
	RCM (Regulatory Compliance Mark) The product complies with the requirements of the applicable Australian standards.

Symbols on the type label and warning label of the battery pack

Symbol	Explanation
	Beware of a danger zone This symbol indicates that the product must be additionally grounded if additional grounding or equipotential bonding is required at the installation site.
	Beware of electrical voltage The product operates at high voltages.
	Risk of chemical burns.
	Risk of explosion.
	Observe the documentation
	Risk of electrolyte leakage.
	CE marking The product complies with the requirements of the applicable EU directives.
	Refer to the instruction for operation.
	Use eye protection.
	Fire, naked light and smoking prohibited.
	No nearing.
	Do not dispose of the battery pack together with the house-hold waste but in accordance with the locally applicable dis-posal regulations for batteries.
	Recycling code.
UN38.3	Marking for transport of dangerous goods The product passes the certifications of the UN38.3

03 Product Introduction and Application Scenarios

3.1 Inverter Description

Inverter appearance and dimensions

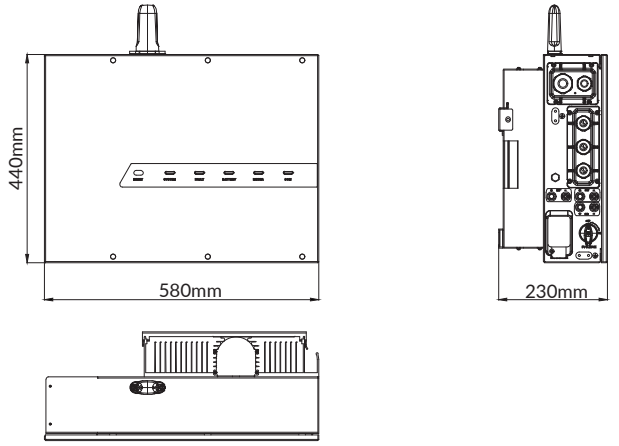

Inverter LED Signals

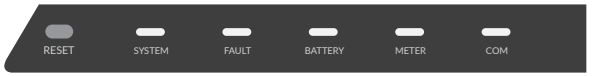

Five LED indicators and one reset button are provided on the display panel.
These LED indicators provide information about the operational status of the system.
The external communication devices will be restarted with the inverter if you long press the reset button for 5s.

LED Indictor	Status	Explanation
SYSTEM		The system works normally
		The system is not operating
FAULT		System failure
		No fault

LED Indictor	Status	Explanation
BATTERY		The battery pack works normally
		Battery communication exists but is not working normally
		Battery communication is lost
METER		Meter communication works normally
		Meter communication is lost
		Grid Meter communication loss in AC or Hybrid mode, flashing once every 500ms
		PV Meter communication loss in AC or Hybrid mode, flashing once every 1s.
COM		Normal communication with the server
		Disconnect to the server
		Normal communication with the APP, flashing once every 4s
		Connected to the server but not logged in, flashing once every 2s
		Connected to the router, flashing once every 1s
		Connected to the WiFi module, flashing once every 500 ms

3.2 Battery Pack Description

Battery pack appearance and dimensions

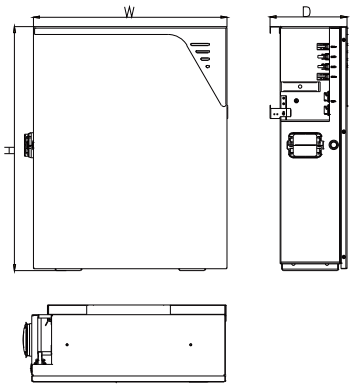

SMILE-BAT-8.2PH

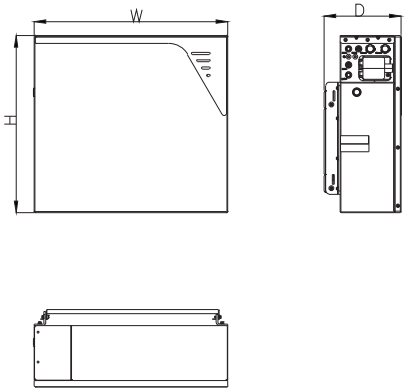

SMILE-BAT-5PH

Battery pack appearance and dimensions

Battery Pack	Dimension (W*H*D)
SMILE-BAT-8.2PH (OUTDOOR)	580*820*230 mm
SMILE-BAT-8.2PH (INDOOR)	580*730*230 mm
SMILE-BAT-5PH (INDOOR)	580*530*230 mm

Four LED indicators are provided on the display panel.
Different colors represent different states: green for SOC , yellow for Protection , red for Error.

The LED indicators provide information about the SOC operational status of the battery pack.

LED Indicator	SOC	Description
Standby: Green LEDs flash every second		SOC≤5% The first line of the LED indicator flashes every 10s.
		5%＜SOC≤30% The first line of the LED indicator is always on. When the SOC is less than 30% and the battery is being charged, the first line of the LED indicator will flash every 3s.
		30%＜SOC≤55% The first and second line of the LED indicator are always on. When the battery is being charged and the SOC is between 30% and 55%, the second line of the LED indicator will flash every 3s.
		55%＜SOC≤80% The first, second and third line of the LED indicator are always on. When the battery is being charged and the SOC is between 55% and 80%, the third line of the LED indicator will flash every 3s.
		80%≤SOC≤100% All the LED indicators are always on. When the battery is being charged and the SOC is between 80% and 100%, the fourth line of the LED indicator will flash every 3s.

3.3 Application Scenarios

AlphaESS SMILE-S6-HV system (includes SMILE-S6-HV-INV and SMILE-BAT-8.2PH or SMILE-BAT-5PH) can be applied in DC-coupled systems (mostly new installation), AC-coupled systems (mostly retrofit) , Hybrid-coupled systems (mostly retrofit, and increase the PV capacity), and Off-grid (with Generator) systems as the following schemes show :

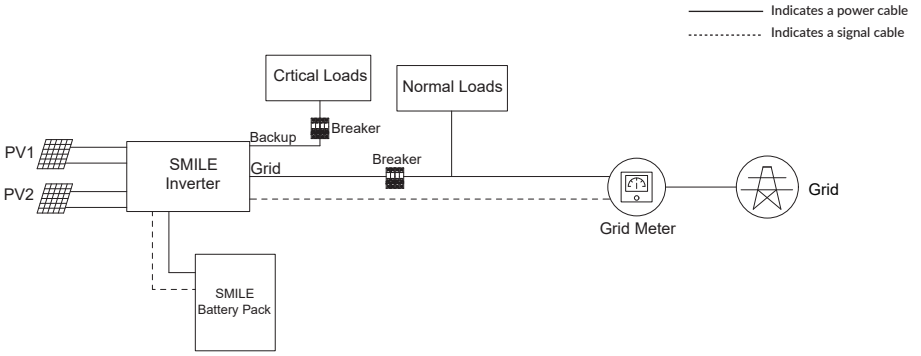

DC-coupled Storage System–Scheme

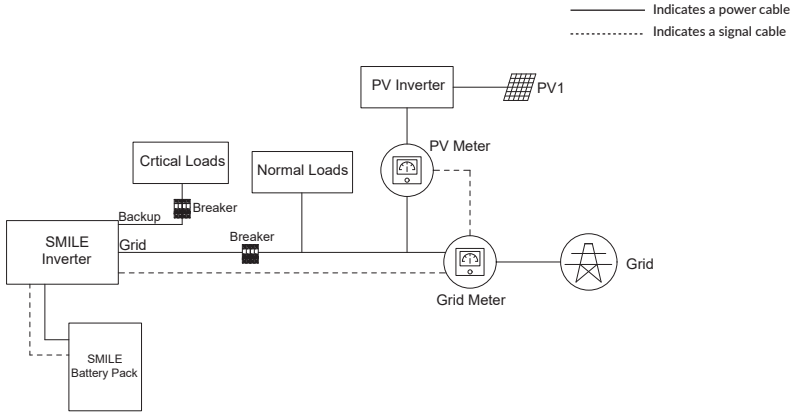

AC-coupled Storage System–Scheme

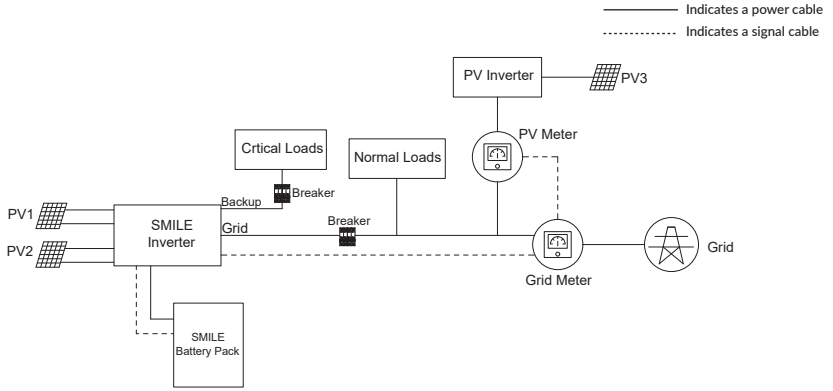

Hybrid-coupled Storage System–Scheme

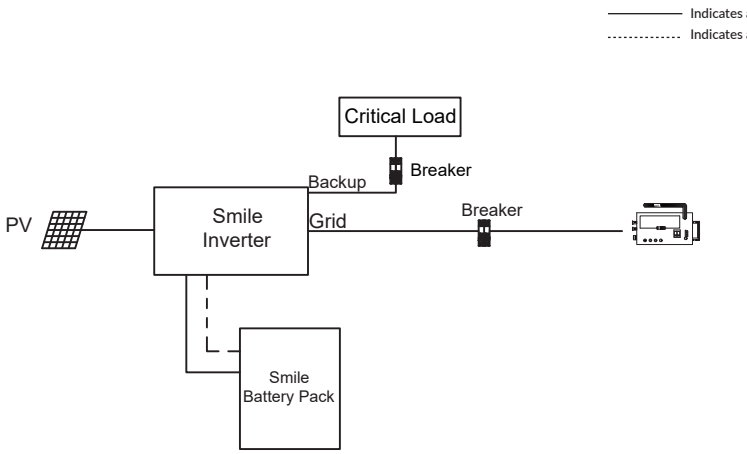

Off -grid (with Generator) Storage System–Scheme

04 Storage

4.1 Inverter Storage

The following requirements should be met if the inverter is not put into use directly:
1. Do not unpack the inverter.
2. Keep the storage temperature at -40~70°C and the humidity at 5%~95% RH.
3. The inverter should be stored in a clean and dry place and be protected from dust and water vapor corrosion.
4. A maximum of six inverters can be stacked. To avoid personal injury or device damage, stack inverters with caution to prevent them from falling over.
5. During the storage period, check the inverter periodically. (It is recommended that the check is performed every three months.) Replace the packing materials that are damaged by insects or rodents in a timely manner.
6. If the inverters have been stored for more than two years, it must be checked and tested by professionals before being put into use.

4.2 Battery Storage

The following requirements should be met if the battery pack is not put into use directly:
1. Place batteries according to the signs on the packing case during storage. Do not put batteries upside down or sidelong.
2. Stack battery packing cases by complying with the stacking requirements on the external package.
3. Store the battery pack out of reach of children and animals.
4. Store the battery pack where it should be minimal dust and dirt in the area.
5. Handle batteries with caution to avoid damage.
6. The storage environment requirements are as follows:
– Ambient temperature: -10~55°C, recommended storage temperature: 15~30°C
– Relative humidity: 15%~ 85%
– Place batteries in a dry and clean place with proper ventilation.
– Place batteries in a place that is away from corrosive organic solvents and gases.
– Keep batteries away from direct sunlight.
– Keep batteries at least 2 m away from heat sources.
7. The batteries in storage must be disconnected from external devices. The indica-tors (if any) on the batteries should be off.
8. Batteries should be delivered based on the "first in, first out" rule.
9. The warehouse keeper should collect battery storage information every month and periodically report the battery inventory information to the planning department. The batteries that have been stored for nearly 6 months should be recharged timely.
10. If a lithium battery is stored for a long time, capacity loss may occur. After a lithi-um battery is stored for 12 months in the recommended storage temperature, the irreversible capacity loss rate is 3%~10%. It is recommended that batteries not be stored for a long period. If the batteries need to be stored for more than 6 months, it is recommended to recharge the batteries to 65~75% of the SOC. For example, they can be recharged every 6 months at least, and must be recharged to at least 50% of the SOC.

05 Unpacking

5.1 Checking the Outer Packing

Before unpacking the battery pack and inverter, check the outer packing for damage, such as holes and cracks. If any damage is found, do not unpack the product and contact your distributor as soon as possible.

5.2 Scope of Delivery

Check the scope of delivery for completeness and any externally visible damage. Contact your distributor if the scope of delivery is incomplete or damaged.

SMILE-S6-HV-INV Hybrid Inverter				
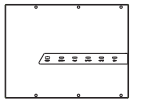	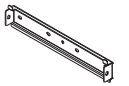			
Inverter (X1)	Upper Wall Bracket (X1)	Lower Wall Bracket (X1)	Inverter Positioning Paper Plate (X1)	Wall Anchor ST6*55 (X6) (Optional)
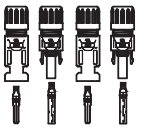		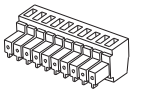	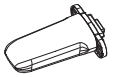	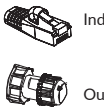
PV+&PV-Connectors (X2)	Cord End Terminal (X8)	10 Pin Terminal Block (X1)	WiFi Module (X1)	Terminal Resistor (X1)
	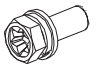		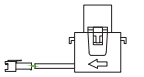	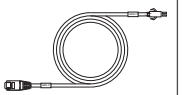
Ring Terminal Lug (X2)	Screw M5*10 (X2) Screw M6*16 (X3)	T20 Screwdriver (X1)	CT (X1) (Optional)	CT Cable (X1) (Optional)
				
Installation Manual (X1)	Grid Magnet Ring (X1)	Side Gasket (X1)	Wire Cover (X1)	Cord End Terminal for 10mm² cable (X4) (Optional)

SMILE-BAT-8.2PH			
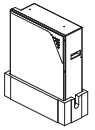	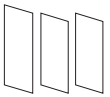	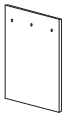	
Battery Pack (X1)	Floor Gasket (X3)	Battery Positioning Paper Plate (X1)	Battery Wall Bracket (X1)
	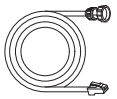	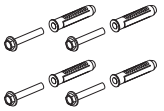	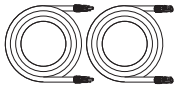
Cardboard limit board (X1)	Battery COM Cable (X1)	Wall Anchor ST6*55 (X4)	Power Cable + (X 1) Power Cable - (X 1)
		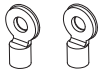	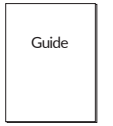
Screw M5*10 (X8) (Indoor Use)	Foot Pad(X2) (Outdoor Use)	Ring Terminal Lug (X2)	Quick Installation Guide (X1)
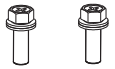	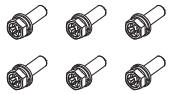		
Screw M6*12 (X2) (OUTDOOR Use)	Screw M5*10 (X6) (OUTDOOR Use)	Screw M4*12 (X3) (OUTDOOR Use)	Upper Cover Plate (X1)
SMILE-BAT-5PH			
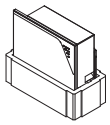		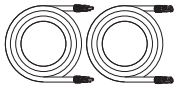	
Battery Pack (X1)	Wall Anchor ST6*55 (X6)	Power Cable + (X1) Power Cable - (X1)	Battery COM Cable (X1)

SMILE-BAT-5PH			
	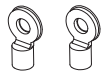	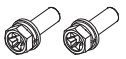	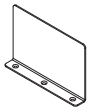
Battery Positioning Paper Plate (X1)	Ring Terminal Lug (X2)	Screw M5*10 (X2)	Upper Cover Plate (X1)
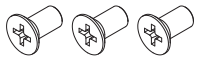	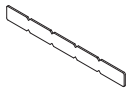		
Screw M5*12 (X3)	Side Gasket (X1)		

06 Mounting

6.1 Requirements for Mounting

WARNING

Danger to life due to fire or explosion
Despite careful construction, electrical devices can cause fires.
★ Do not mount the product in areas containing highly flammable materials or gases.
★ Do not mount the product in potentially explosive atmospheres.

Basic Requirements

★ SMILE-S6-HV-INV (OUTDOOR) and SMILE-BAT-8.2PH (OUTDOOR) are suitable for indoor and outdoor use.
★ SMILE-S6-HV-INV (INDOOR) and SMILE-BAT-8.2PH (INDOOR) and
★ SMILE-BAT-5PH (INDOOR) are suitable for only indoor use.
★ Do not install the inverter in a place where a person can easily touch because its housing and heatsink are hot during operation.
★ Do not mount the product in areas with flammable or explosive materials.
★ Do not mount the product at a place within children's reach.
★ Do not mount the product outdoors in salt areas because it will be corroded and may cause fire. A salt area refers to the region within 500m from the coast or prone to sea breeze. The regions prone to sea breeze vary depending on weather conditions (such as typhoons and monsoons) or terrains (such as dams and hills).

Mounting Environment Requirements

★ The product must be mounted in a well-ventilated environment to ensure good heat dissipation.
★ When mounted under direct sunlight, the power of the product may be derated due to additional temperature rise.
★ Mount the product in a sheltered place or mount an awning over the product.
★ The optimal temperature range for the battery pack to operate is from15 to 30℃.
★ Do not expose or place near water sources like downspouts or sprinklers.
★ If the battery pack is mounted in the garage, then ensure that it is above the height of the vehicle bumper and door.

Mounting Structure Requirements

★ The mounting structure where the product is mounted must be fireproof.
★ Do not mount the product on flammable building materials.
★ Ensure that the mounting surface is solid enough to bear the weight load.
★ In residential areas, do not mount the inverter on drywalls or walls made of similar materials which have a weak sound insulation performance. Because the noise generated by the inverter is obvious.

Mounting Angle and Stack Requirement

SMILE-BAT-8.2PH should be floor-mounted.
SMILE-S6-HV-INV and SMILE-BAT-5PH should be wall-mounted.
The installation angle requirement is as follow:

- Do not mount the battery pack and inverter at forward tilted, back tilted, side tilted, horizontal, or upside down positions.

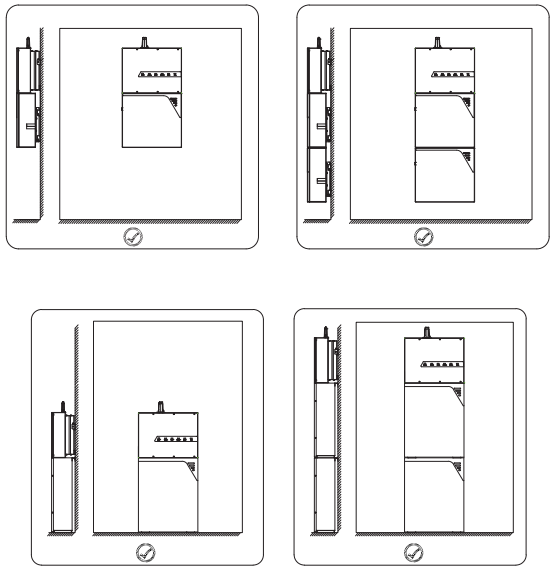

Mounting Space Requirements

- Reserve enough space around the battery pack and inverter to ensure sufficient space for installation, maintenance and heat dissipation.

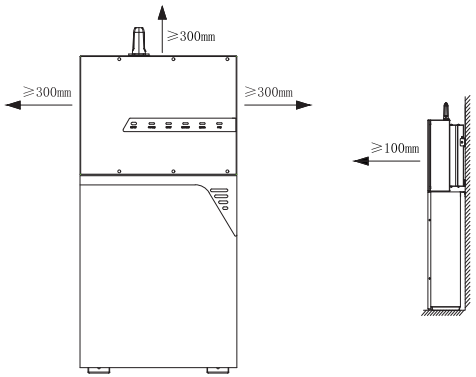

6.2 Preparing Tools and Instruments

Category	Tools and Instruments		
Installation	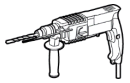 Hammer drill (with a Φ10 mm drill bit)	 Torque socket wrench SW10	 Multimeter (DC voltage measurement range ≥ 1000 V DC)
	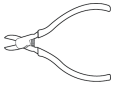 Diagonal pliers	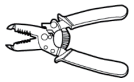 Wire stripper	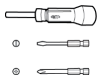 Torque screwdriver (slotted head , torque range: 0-2 N m)
	 Rubber mallet	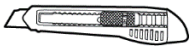 Utility knife	 Cable cutter
	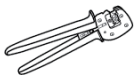 Crimping tool (model: PV-CZM-22100)	 Cord end terminal crimper	 Disassembly and Assembly Tool (model: PV-MS-HZ open-end wrench)
	 Vacuum cleaner	 Heat shrink tubing	 Heat gun
	 Marker	 Measuring tape	 Bubble or digital level
Personal Protective Equipment	 Safety gloves	 Safety goggles	 Anti-dust respirator
	 Safety shoes		

6.3 Mounting the SMILE-BAT-8.2PH and Inverter

6.3.1 Mounting the battery pack

1. Lift the battery pack by using the handles at the two sides, take it out from the package carton. Do not put the battery pack upside down on the ground.

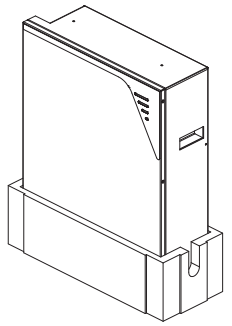

2. Place the battery positioning paper plate on the wall and stick the bottom to the floor, and mark the positions of the two drill holes.

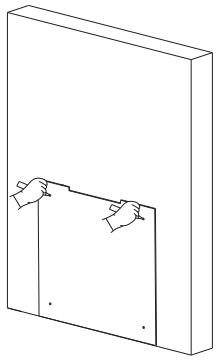

3. Drill 2 holes on the wall with a diameter of 10mm and a depth of about 70mm.

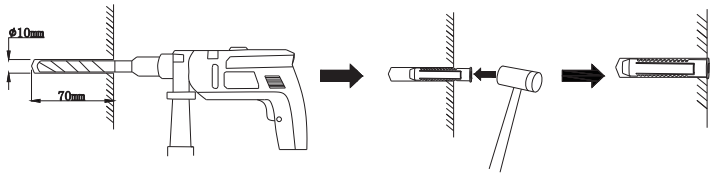

4. After cleaning the dust and other objects from the two holes, place 2 wall anchors into the holes, then attach the battery wall bracket to the wall by using the SW10 hexagon sleeve. Please use a level to ensure that the wall bracket is horizontal.

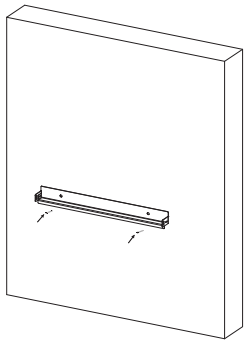

5. Install the cardboard limit board on the battery pack with screw M5*12 (X 2) (tool: T20 screwdriver, torque: 2.5Nm).

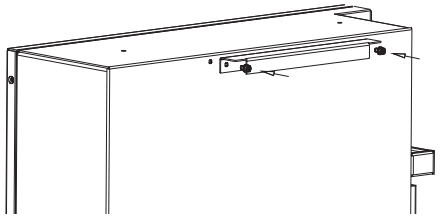

6. Place the battery against the wall, align the holes at the battery side to the screw holes of the wall bracket.

7. Tighten the wall bracket and the battery pack with screw M5*12 (X 2) (tool: T20 screwdriver, torque: 2.5Nm).
   If the floor of installation site is uneven, please use floor gaskets to level at the bottom of the battery pack

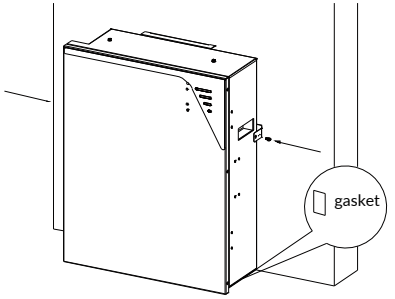

WARNING

Risk of injury when lifting the battery pack, or if it is dropped
The Battery Pack is very heavy . There is risk of injury if the battery pack is lifted incorrectly or dropped while being transported or when attaching it to or removing it from the wall bracket.
★ Transport the battery pack always as described below.
★ It is forbidden to stack 3 batteries from top to bottom.

8. Mounting more batteries
   You can install extra batteries up to 6 batteries in a system.
   Please install extra batteries by side, also batteries can be stacked up to two bat-teries per column. Expansion wiring please refer to Chapter 7.8.
   1) If you will install extra batteries by side, please repeat steps 1-6 and keep the distance between two batteries greater than 300mm. The space between the left and the right battery is a recommended distance. Keep the distance as short as you can if there is no influence to the operation.

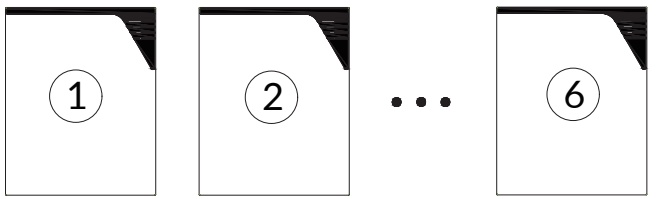

2) For battery stack, lock the screw M6*6 on top of the first battery pack.

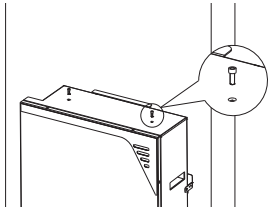

3) Place the battery positioning paper plate against the wall and the bottom with notch against the first battery pack. Repeat steps 1-7.

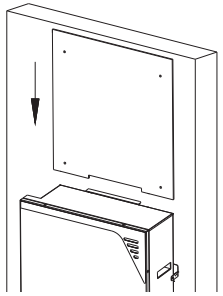

4) The bottom limit holes of the second battery will match the top screws of the first battery.

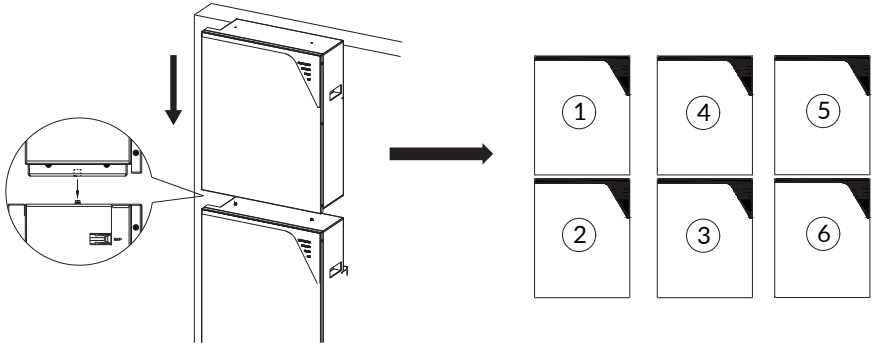

6.3.2 Mounting the inverter

Dimensions in mm

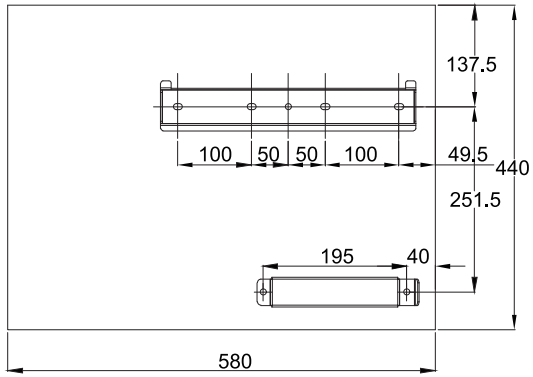

The steps to mount the inverter are listed below:

1. Fit the bottom of the inverter's positioning paper plate into the top of the battery against wall, mark the positions of the drill holes on the paper plate.

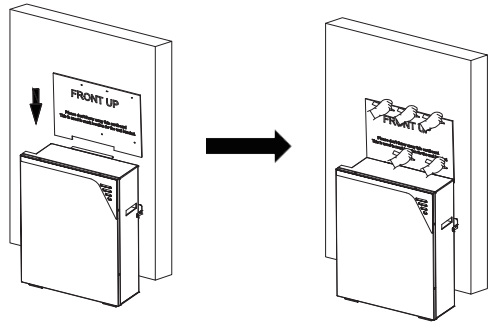

2. Cover the top of the battery with plastic bag and drill 5 holes on the wall with drill Φ10, insert 5 screw anchors into the drill holes.

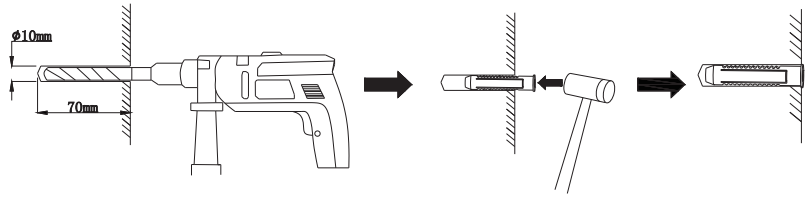

3. Attach the wall bracket to the wall by using the screws with the tool of SW10 hexagon sleeve. Please use a level to ensure that the wall bracket is horizontal.

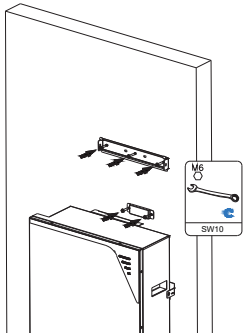

4. Hold the inverter by using the handles at two sides, attach the inverter onto the wall bracket tilted slightly downwards. If the inverter is not aligned with the battery, please increase or decrease PC gaskets to adjust it.

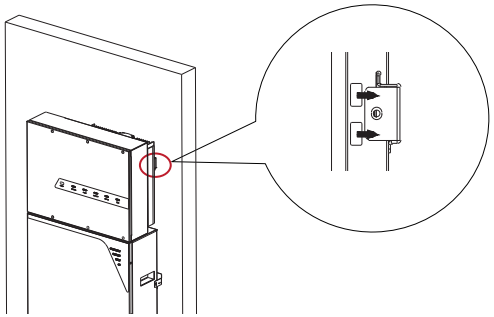

5. Tighten the wall bracket and the inverter with screw M6*16 (X 3) (tool: T20 screwdriver, torque: 3.0Nm).

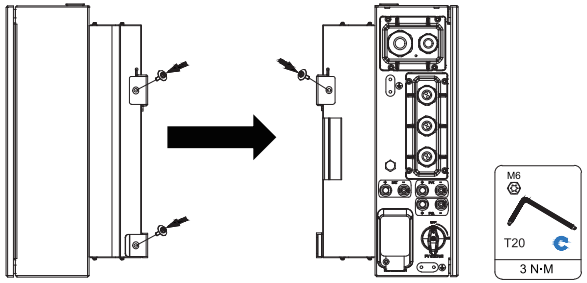

6. Remove the small support parts of the inverter cover and the two screws will be used to connect to grounding point.

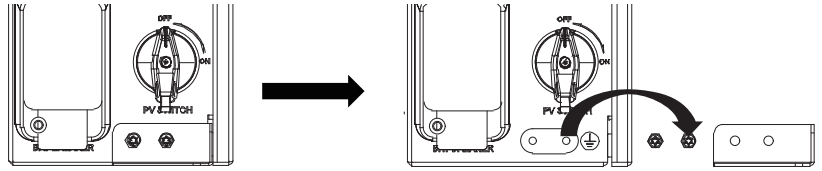

7. Make electrical connection (please refer to Section 7 Electrical Connection).

6.4 Mounting the SMILE-BAT-5PH and Inverter

1. Place the inverter's positioning paper plate against the wall, use bubble or digital level to make sure the paper plate is horizontal and the bottom of the paper plate's height is more than 1.2m, mark the positions of the drill holes on the paper plate.

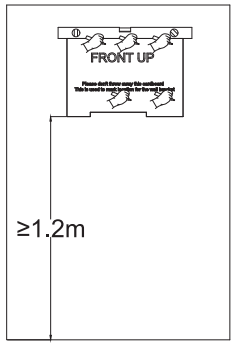

2. Drill 5 holes on the wall with drill Φ10, insert 5 screw anchors into the drill holes.

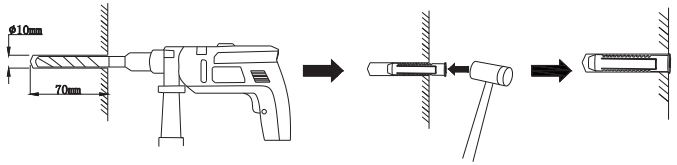

3. Place the battery's positioning paper plate against the wall, fit holes of the paper plate named B1 with the bottom two holes, mark the positions of the drill holes named A1 and A2 on the paper plate.

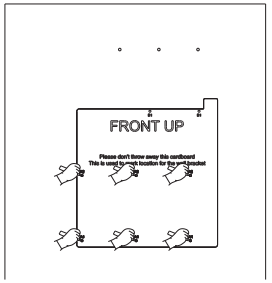

4. Drill 6 holes on the wall with drill Φ10, insert 6 screw anchors into the drill holes.

5. Remove the wall bracket from the battery and attach the wall brackets of inverter and battery to the wall using the screws with the tool of SW10 hexagon sleeve. Please use a level to ensure that the wall bracket is horizontal.

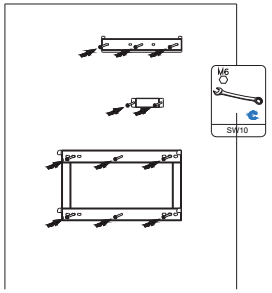

6. Hold the inverter by using the handles at two sides, attach the inverter onto the wall bracket tilted slightly downwards.

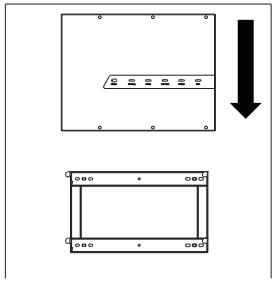

7. Tighten the wall bracket and the inverter with screw M6*16 (X 3) (tool: T20 screwdriver, torque: 3.0Nm).

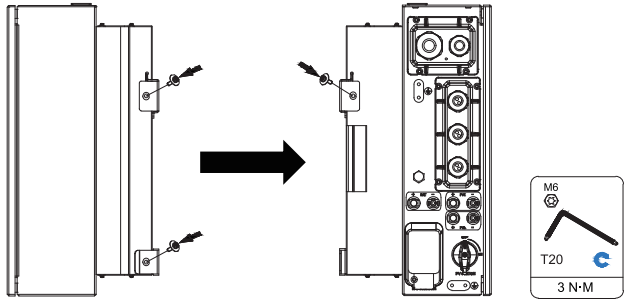

8. Remove the small support parts of the inverter cover and the two screws will be used to connect to grounding point .

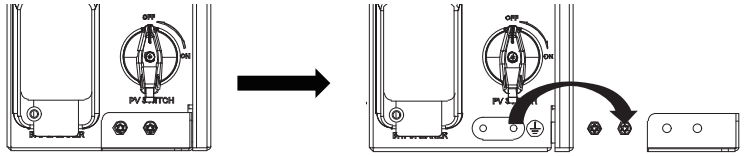

9. Horizontally lift the battery by using the handles at two sides, fit the rectangular hole on the hanging lug with the wall bracket's folding lug and shift it to the right so that the folding lug will be inserted into the rectangular hole. If the inverter is not aligned with the battery, please increase or decrease PC gaskets to adjust it.

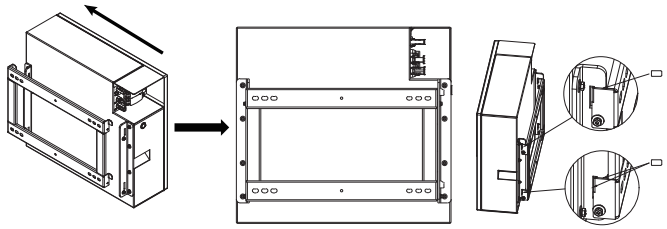

10. Tighten the battery wall bracket and the battery with screw M6*16 (X 4) (tool: T20 screwdriver, torque: 3.0Nm).

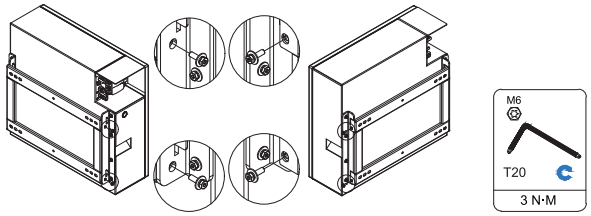

11. Mounting more batteries
You can install extra batteries up to 6 batteries in a system.
1) If the expansion batteries are installed downwards:
Attach the positioning paper plate to the first wall bracket, and mark the wall through holes (A2 and A1) on the paper plate. Use a hammer drill (Φ10.0mm; length 20cm) to drill holes in A1 and A2 with a depth of about 7cm and fix the wall bracket tightly to the wall with expansion screws. Please repeat steps 8~9 to in-stall the expanded battery.
2) If the expansion batteries are installed upwards, inverting the positioning paper plate and repeat the steps above.
3) Please use a level to ensure that the wall bracket is horizontal.

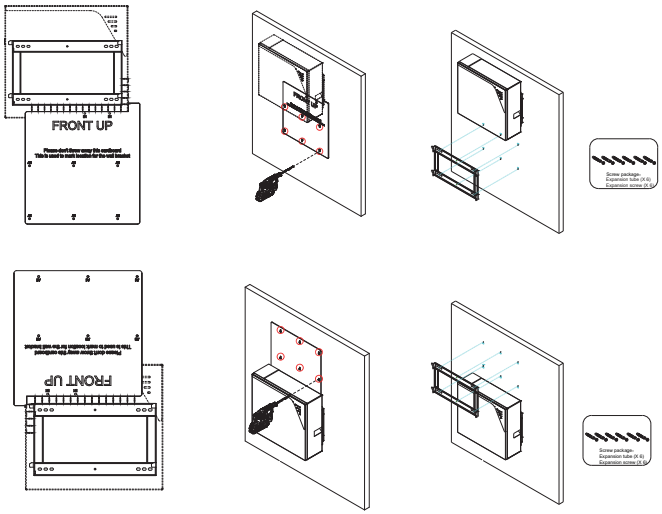

The batteries can be stacked up to three batteries per column. Keep the distance between two columns of the batteries greater than 300mm. Expansion wiring please refer to Chapter 7.8.

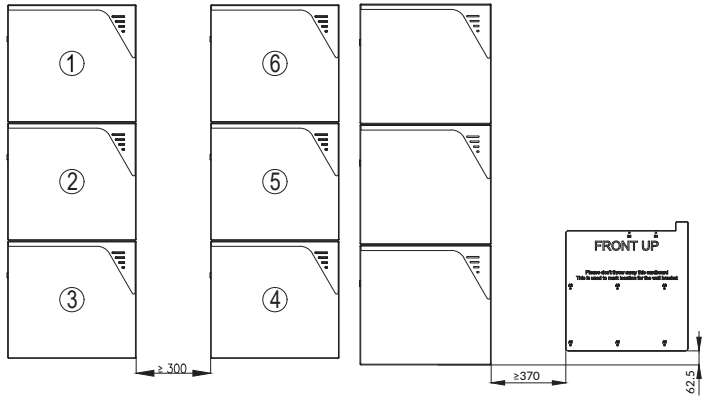

4) If the expansion batteries are installed by side:
Position the positioning paper plate according to the installed batteries, and then repeat steps 3-9 to install the expansion batteries.

6.5 Mounting the WiFi Module

1. Remove the WiFi cover from the left of the inverter (tool: T20 screwdriver).

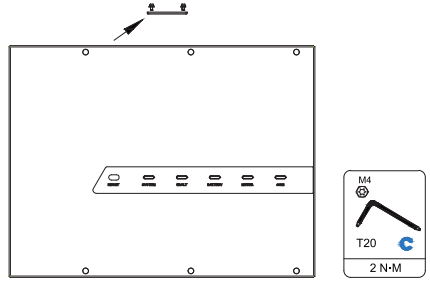

2. Tighten the WiFi module on the inverter with screw M4*12 (X2) (tool: T20 screwdriver, torque: 2.0 Nm).

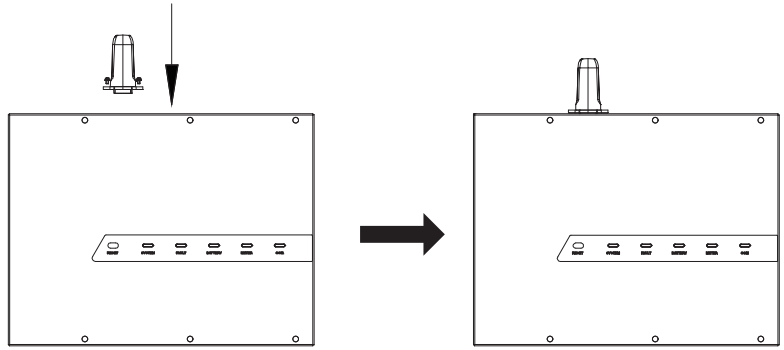

07 Electrical Connection

Precautions

DANGER

Before connecting cables, ensure that all switches and breakers of the inverter and the battery pack and all the switches connected to inverter and the battery pack are set to OFF. Otherwise, the high voltage of the product may result in electric shocks.

WARNING

- The device damage caused by incorrect cable connections is not covered under any warranty.
- Only certified electricians are allowed to connect cables.
- Operation personnel must wear proper PPE when connecting cables.

NOTICE

The cable colors shown in the electrical connection diagrams provided in this chapter are for reference only. Select cables in accordance with local cable speci-fications (green-and-yellow cables are only used for PE).

7.1 Overview of the Connection Area

7.1.1 Overview of the Inverter Connection Area

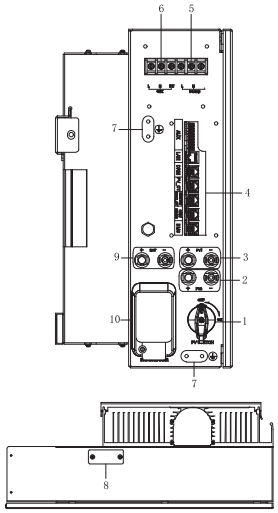

Position	Designation
1	PV switch
2	1 positive and 1 negative PV connectors, PV input A
3	1 positive and 1 negative PV connectors, PV input B
4	Communication port（BMS, CAN/RS485, Meter/Grid-CT, PV-CT, DRM*, LAN, AUX）
5	Backup connection port
6	Grid connection port
7	Connection point for an additional grounding
8	Connection port for the WiFi module
9	1 positive and 1 negative BAT power connectors
10	Battery breaker**

*The DRM (Demand Response Enabling Device) is only for regions with AS/NZW 4777.2 safety regulations.
**All breakers are switched off in transportation.

The following table is about DRM interface definition.

Mode	Requirement
DRM0	Operate the disconnection device
DRM1	Do not consume power
DRM2	Do not consume at more than 50% of rate power
DRM3	Do not consume at more than 75% of rate power AND Source reactive power if capable
DRM4	Increase power consumption (subject to constraints from other active DRMs)
DRM5	Do not generate power
DRM6	Do not generate at more than 50% of rate power
DRM7	Do not generate at more than 75% of rate power AND Sink reactive power if capable
DRM8	Increase power generation (subject to constraints from other active DRMs)

7.1.2 Overview of the Battery Pack Connection Area

The battery breaker is switched off before delivery

a) SMILE-BAT-8.2PH (INDOOR)

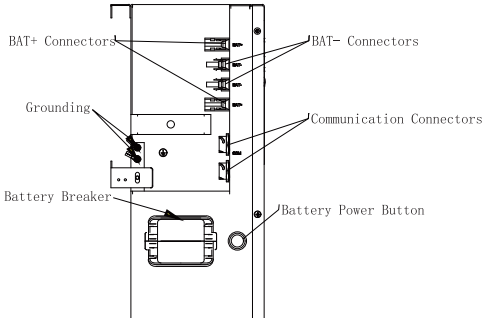

b) SMILE-BAT-8.2PH (OUTDOOR)

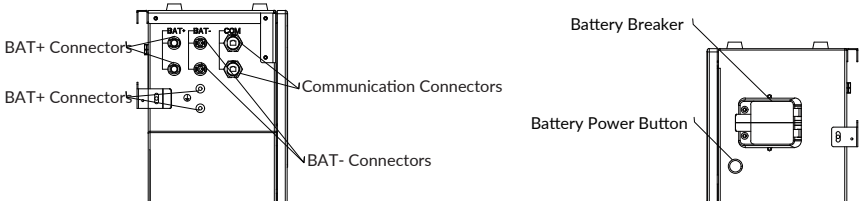

c) SMILE-BAT-5PH (INDOOR)

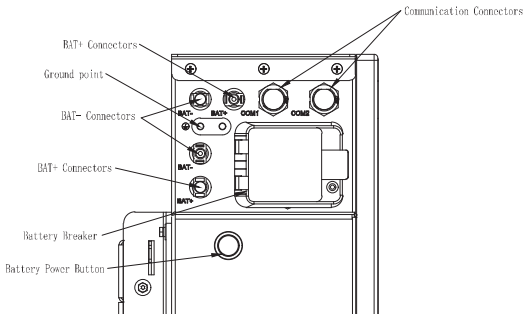

7.2 Preparing Cables

No.	Cable	Type	Conductor Cross Section Area Range	Outer Diameter	Source
1	Battery power cable	Standard PV cable in the industry (recommended type: PV1-F)	6 ～ 10 mm²	N/A	Delivered with the battery pack
2	Battery communication cable	Standard network cable in the industry (recommended type: Cat5e, UTP, UV-resistant for outdoor use)	0.12 ～ 0.2 mm² (AWG26~AWG24)	N/A	Delivered with the battery pack
3※1	Signal cable	Standard network cable in the industry (recommended type: Cat5e, FTP, UV-resistant for outdoor use)	4 mm²	N/A	Delivered with the inverter
4	PV power cable	Standard PV cable in the industry (recommended type: PV1-F)	0.12 ～ 0.2 mm² (AWG26~AWG24)	5.5 ~ 9 mm	Purchased by the installer
5※2	Signal cable	Standard network cable in the industry (recommended type: Cat5e, FTP, UV-resistant for outdoor use)	0.12 ～ 0.2 mm² (AWG26~AWG24)	4~6 mm	Purchased by the installer
6※3	Signal cable	Multiple-core outdoor shielded twisted pair cable	0.1 ～ 1.3 mm²	12~16 mm	Purchased by the installer
7※4	AC power cable	Three-core (L, N and PE) outdoor copper cable	4 ～ 10 mm²	12 ~ 15mm	Purchased by the installer
8	PE cable	Single-core outdoor copper cable	4 ～ 10 mm²	N/A	Purchased by the installer

※1 For CT communication connection with inverter.
※2 For CAN/RS485, LAN, Meter, DRM communication connection with inverter.
※3 For AUX communication connection with inverter
※4 4-6 mm² for indoor inverter,4-10mm² for outdoor inverter

7.3 Connecting Additional Grounding

An external grounding connection is provided at the left side of the inverter.
Prepare M5 OT terminals, strip the grounding cable insulation, insert the stripped part of the grounding cable into the ring terminal lug and crimp using a crimping tool.
Connect the OT terminal with ground point using the torque is 2.5 Nm with T20 screwdriver.

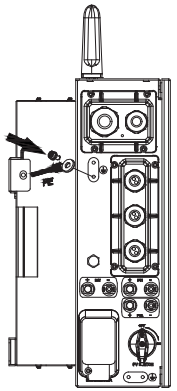

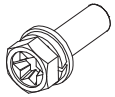

M5*10 Screw (X4)

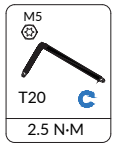

Connect the ground points between the battery and the inverter to ensure that the battery and the inverter have been grounded, as shown in the figure below.

a) SMILE-BAT-8.2PH (OUTDOOR)

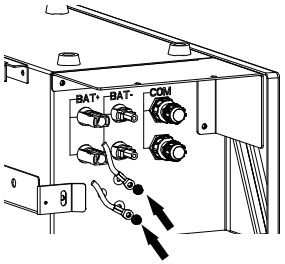



M5*10 Screw (×2)

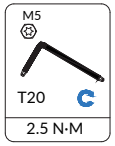

b) SMILE-BAT-8.2PH (INDOOR)

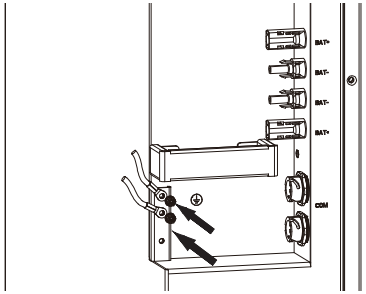

c) SMILE-BAT-5PH (INDOOR)

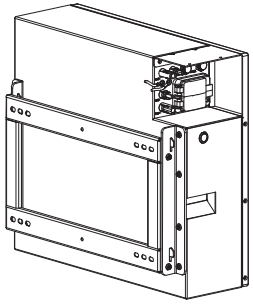

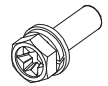

M5*10 Screw (X2)

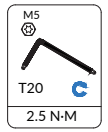

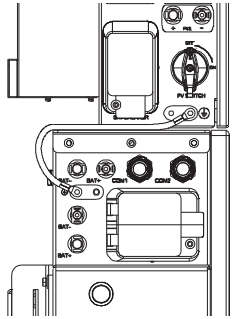

7.4 AC Connection

7.4.1 Conditions for the AC Connection

AC breakers must be installed on the AC side of the inverter to ensure that the inverters can be safely disconnected from the power grid and the load.

DANGER

Danger to life due to fire!
You must protect each inverter with an individual AC circuit breaker in order to ensure that the inverter can be disconnected safely.

Do not connect loads between the inverter and the grid breaker.
No consumer load should be applied between the AC circuit breaker and the inverter.
Use a dedicated circuit breaker with load switch function for load switching.
The selection of the AC circuit breaker rating depends on the wiring design (wire cross section area), cable type, wiring method, ambient temperature, inverter current rating, etc.
Derating of the AC circuit breaker rating may be necessary due to self-heating or if exposed to heat. Depending on site system configuration to select an appropriate AC circuit breaker.
The maximum AC current of the inverters can be found in the following table.

Description	Max Current	
	Inverter (indoor)	Inverter (outdoor)
Grid side	40A	52.2A
Backup side	21.7A	26.1A

7.4.2 Grid and Backup Connection

There are two AC terminal blocks for grid and backup connection which have the same installation steps.
We recommend the following cable requirements for AC connection.

Description	Value
Cable diameter range for grid cable gland	9~21 mm
Cable diameter range for backup cable gland	9~16 mm
Copper conductor cross section area range	4~6 mm^2
Stripping length of the insulated conductors	10~12 mm

1.Take out the cord end terminals and AC&COM connection cover provided by the inverter.
2. Lead the AC cable through the cable gland of the cover, don' t tighten the pressure cap of the cable gland. Grid cable must pass through magnetic ring which is provided as inverter accessory.

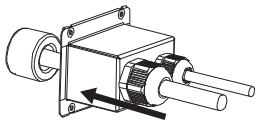

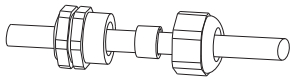

Installation method of AC cable via cable gland.
If the outer diameter of the cable is thicker, remove the inner sealing ring from the cable gland.

3. Dismantle the AC cable by 80mm, and strip the insulation of L, N and PE conductors by 10mm.

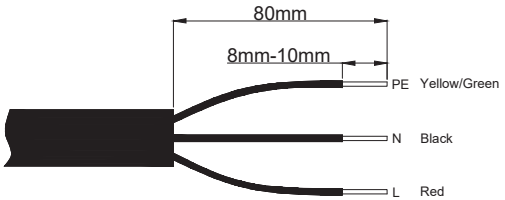

4. Insert the stripped part of the conductors into the cord end terminals and crimp them using a crimping tool.

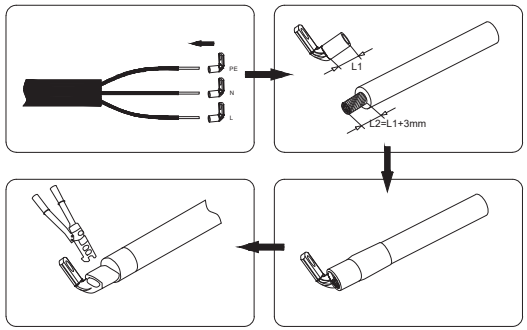

5. Insert the terminals with different color conductors to the holes of the respective polarity and tighten them one by one by using the torque of 2 Nm with tool of cross recessed screwdriver.

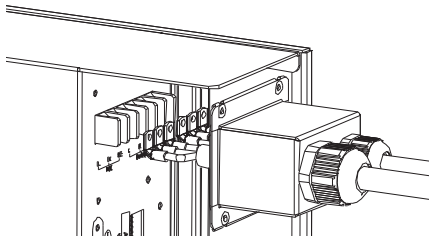

6. Fix the AC connection cover tightly on the inverter and tighten the pressure caps of the two cable glands.

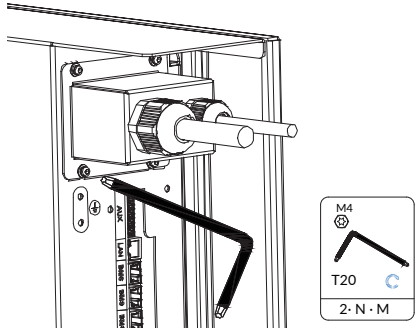

NOTICE

For Australia and New Zealand installation site, the neutral cable of grid side and backup side must be connected together, otherwise backup output function will not work.

7.4.3 Residual Current Protection

The inverter is equipped with an all-pole sensitive residual current monitoring unit (RCMU) with an integrated differential current sensor which fulfills the requirement of DIN VDE0100-712(IEC60364-7-712:2002).
Therefore, an external residual current device (RCD) is not required. If an external RCD needs to be installed because of local regulations, a RCD type A or type B can be installed as an additional safety measure.
The all-pole sensitive residual current monitoring unit (RCMU) detects alternating and direct differential currents. The integrated differential current sensor detects the current difference between the neutral conductor and the line conductor. If the current difference increases suddenly, the inverter disconnects from the grid. The function of the all-pole sensitive residual current monitoring unit (RCMU) has been tested according to IEC62109-2.

Notice of installing an external residual current device (RCD) for installa-tion of Australia and New Zealand

Where an external residual current device (RCD) is required in a TT or TN-S sys-tem, please install a residual current device which trips at a residual current of 30mA.

7.4.4 CT Connection

We provide a Grid-CT cable and a CT accessory for DC-coupled systems.

Step 1: Insert the registered jack of the Grid-CT cable into the Grid-CT port on the inverter

Step 2: Connect the other end of Grid-CT cable with the CT.

Step 3: Buckle the Grid-CT on the live wire of the house.

For AC-coupled systems and Hybrid-coupled systems, another PV-CT is required . Buckle the PV-CT on the live wire of the PV inverter connecting point and insert the registered jack of the PV-CT cable into the PV-CT port on the SMILE-S6-HV-INV.

NOTE:
The arrow of the CT should point to the grid port of the inverter from the grid or the PV inverter.

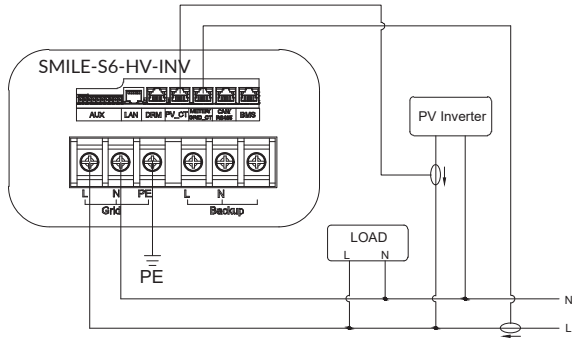

7.4.5 Meter Connection

The system supports the following two different metering schemes in order to record the feed-in power and consumption from grid:

★ DTSU666-3*230V 5A: Three/single-phase meter (without CT)
★ DTSU666-100/40mA: Three/single-phase meter (with 3 or 6 CT)

Meter wiring introduction

NOTICE

★ If the extra PV inverter are not used, the system is suitable for DC mode.
★ If you use the extra PV inverter, the system is suitable for AC or Hybrid mode.

1. DTSU666-3*230V 5A: Three-phase meter (without CT) connection

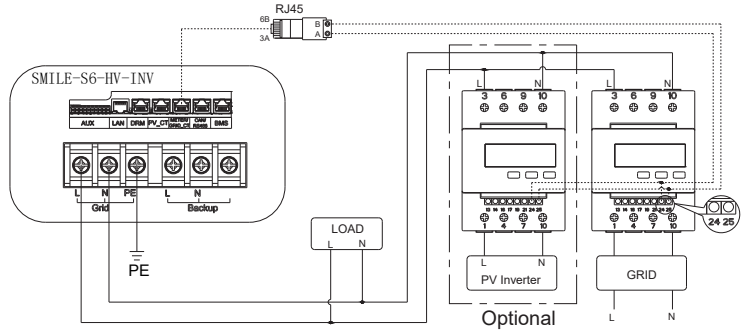

Wiring at single-phase home

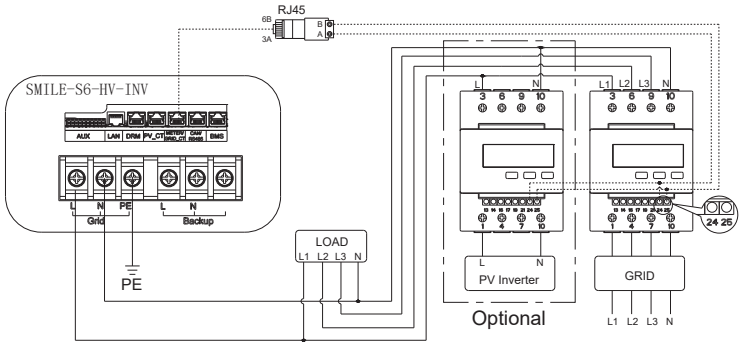

Wiring at three-phase home

2. DTSU666-100/40mA: Three-phase meter (with 3 or 6 CTs) connection

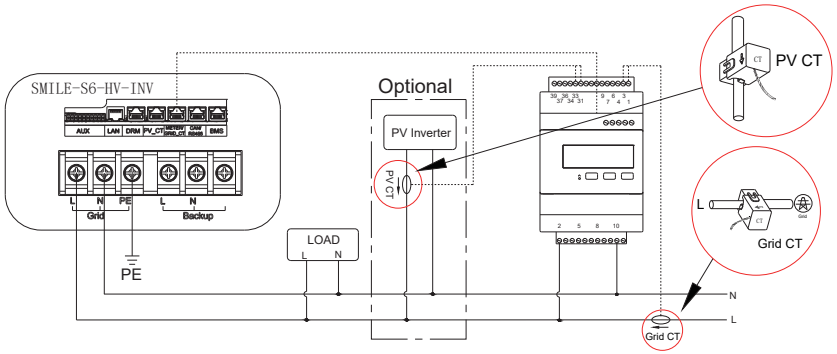

Wiring at single-phase home

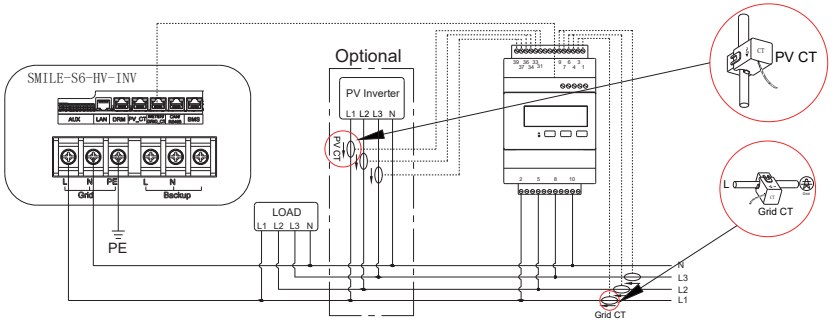

Wiring at three-phase home

Grid CT	PV CT
1--------IC (White)	31--------IC (White)
3--------IC (Blue)	33--------IC (Blue)
4--------IB (White)	34--------IB (White)
6--------IB (Blue)	36--------IB (Blue)
7--------IA (White)	37--------IA (White)
9--------IA (Blue)	39--------IA (Blue)

NOTE:
If you have extra PV inverter in the whole system, with two set CTs, you don't need the second CT meter. One set CT is used for the grid side and another set for PV inverter side.

Meter Address Setting

Model	Grid Meter Address	PV Meter Address
DTSU666-3*230 V 5 A (without CT)	1	2
DTSU666-100/40 mA (with CT)	1	N/A

1. DTSU666-3*230V 5A: Three-phase meter (without CT)

When the meter is used as Grid meter, please follow the steps below to complete the address setting by pressing the corresponding button and the number of times.

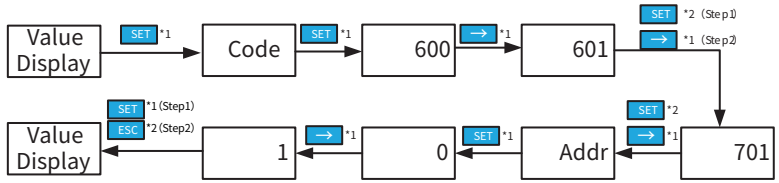

When the meter is used as PV meter, please follow the steps below to complete the address setting by pressing the corresponding button and the number of times.

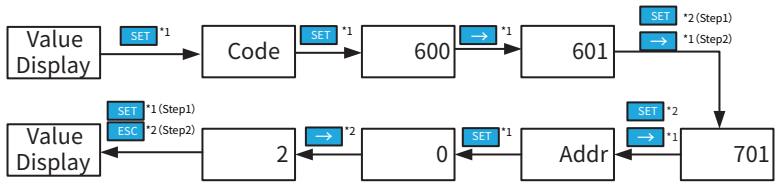

2. DTSU666-100/40mA: Three-phase meter (with CT)

When the meter is used as Grid meter, please follow the steps below to complete the address setting by pressing the corresponding button and the number of times.

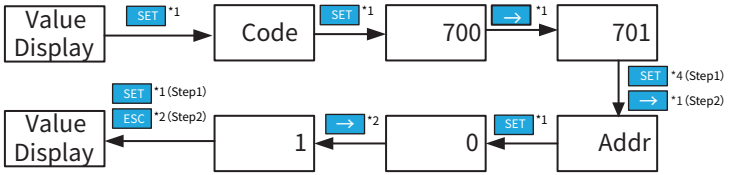

Meter Setting on AlphaCloud

Step 1

When the system work mode is selected as DC, click the button under the “Grid Meter” to turn the “Meter” in green.
When the system work mode is selected as AC or Hybrid, click the buttons under the “Grid Meter” and “PV side meter” to turn the “Meter” in green.

Step 2

Click “Save” and wait a few minutes to refresh the page.
When the “Meter Model” displays DTSU666 model, the setting is successful.

NOTE:
It is forbidden to tick CT to modify the CT ratio.

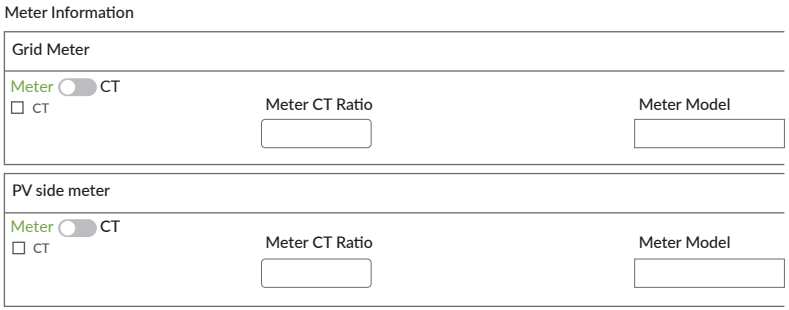

Meter Setting on AlphaAPP

Step 1

When the system work mode is selected as DC, only tick the “Meter” on the right of the “Grid Meter”.
When the system work mode is selected as AC or Hybrid, both tick the “Meter” on the right of the “Grid Meter” and “PV side meter”.

Step 2

Click “Submit” and enter the “System information” page to check the meter model. The setting is successful if meter model is DTSU666-100/40mA.

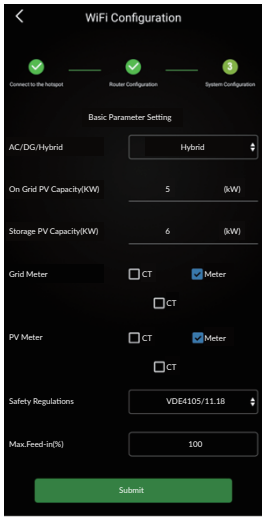

NOTE:
It is forbidden to tick CT to modify the CT ratio.

7.4.6 Backup Box & Backup Box-PLUS Connection

NOTICE

- ★ The residual current device (RCD) should be connected to the load side.
- ★ For Australia safety regulation, the neutral cable of On-Grid side and Back-Up side must be connected together; otherwise Back-Up function will not work.

Three/single-phase meter (Contain off-grid switching)

Description	Maximum current per phase
Backup Box	32A
Backup Box-PLUS	63A

1) Backup Box Connection

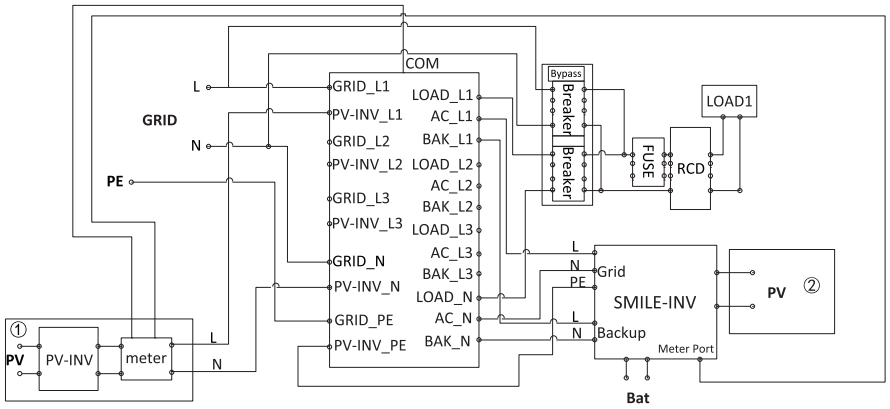

Backup Box connection at single-phase home

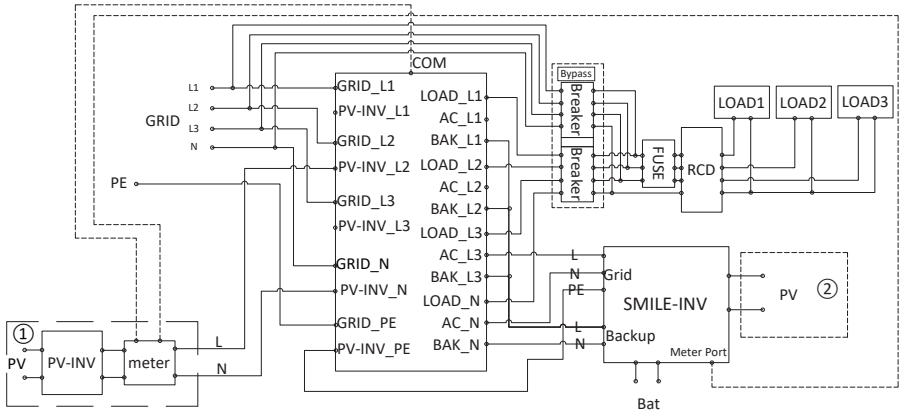

Backup Box connection at three-phase home

2) Backup Box-PLUS Connection

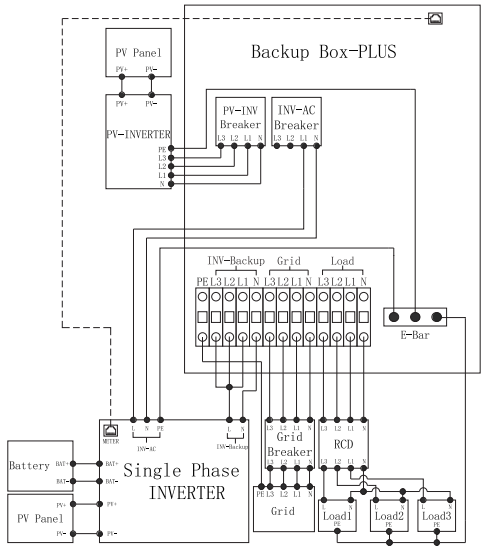

Backup Box-PLUS connection at single-phase home

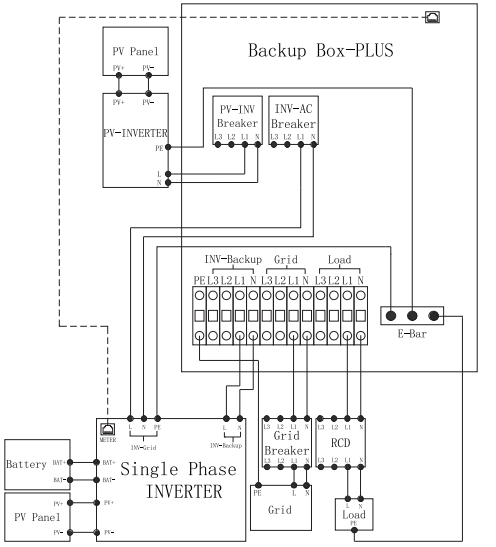

Backup Box-PLUS connection at three-phase home

7.5 Communication Connection

Communication connection port as follows:

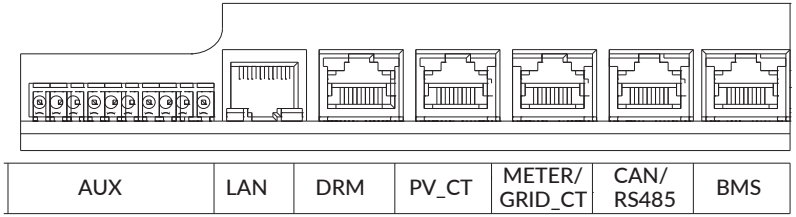

Please follow the below steps for battery communication connection.

1. Lead the communication cables through the cable glands of the COM connection cover, don't tighten the pressure caps of the cable glands.
Insert the RJ45 plugs to the relative RJ45 sockets.
For outdoor use, the RJ45 connector is equipped with a waterproof connecter. Loosen the waterproof connecter, pass the RJ45 connector through cable gland and then insert the RJ45 connector into the COM connection cover.

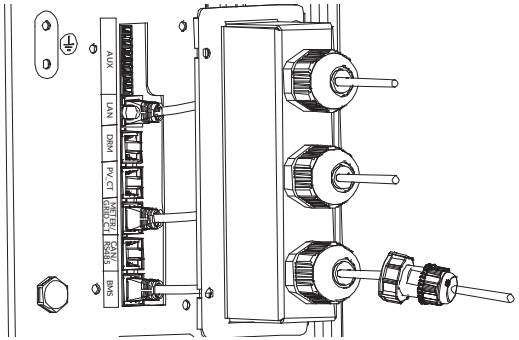

Installation method of two communication cables via M25 cable gland

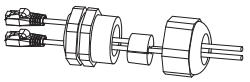

Installation method of only one communication cable via M25 cable gland

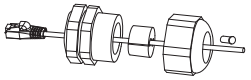

1) Connect the BMS port on the inverter and COM port on the battery with communication cable.
2) For meter wiring, please read electricity meter wiring instructions of the meter.
If DRM support is specified, the system may only be used in conjunction with a Demand Response Enabling Device (DRED). This ensures that the system im-plements the commands from the grid operator for active power limitation at all times. The system and the Demand Response Enabling Device (DRED) must be connected in the same network. Only DRM0 is available for SMILE-S6-HV.

3) Take out 10 pin terminal block for AUX connection.
AUX contains Channel1 and Channel2. Channel1 contains Do1_NO (normally open), Do1_COM and Do1_NC (normally closed), corresponding to 1, 2 and 3 respectively.
Channel2 contains Do2_NO, Do2_COM and Do2_NC, corresponding to 4, 5 and 6 respectively.

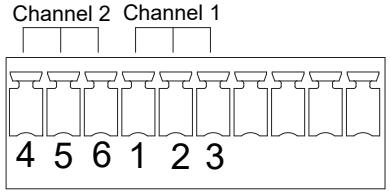

Channel 1		Channel 2	
1	Do1_NO	4	Do2_NO
2	Do1_COM	5	Do2_COM
3	Do1_NC	6	Do2_NC

If using a generator unit with dry contact, the dry contact can be wired to 1 (Do1_NO) and 2 (Do1_COM) of Channel 1 as shown in the diagram below.

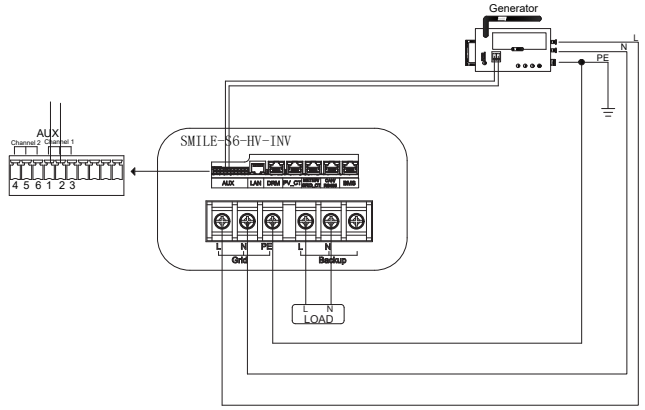

There are two way to start the generator includes auto start by dry contact control and manual start.Please refer to the APP or Server related manual for specific settings.
The operating mode is battery charging power mode. The generator unit can be started and stopped by controlling the time and SOC.
To activate the genset function, it is necessary to ensure that Pgenerator≥Pbattery.max charge+Pmax load (the rated active power of the generator unit must be more than the sum of the total maximum power of the customer's load and the set maximum battery charge power). This solution requires the customer to provide the total active power of the load at the backup end and then calculate the battery rechargeable power from the rated power, power factor and frequency of the generator unit. If this solution is not followed, the generator could shut down when the load is suddenly increased due to the high battery chargeable power setting or the low rated power of the customer's generator.

2. Place the COM connection cover against the inverter and tighten them.

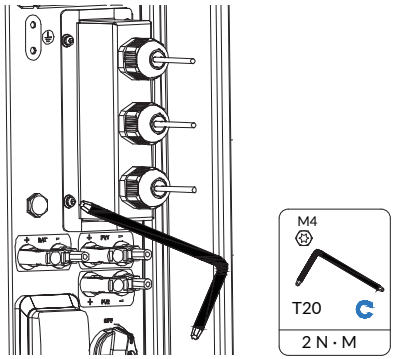

3. After completing all the wiring on the inverter, install a wire cover and tighten the screws by hand.

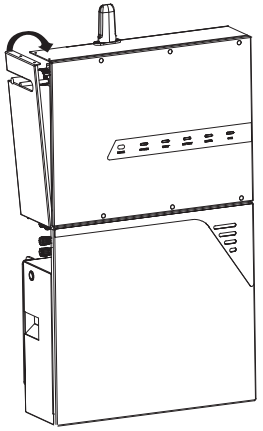

7.6 PV Connection

Please ensure the follows before connecting PV strings to the inverter:

- Make sure the voltage of the PV string will not exceed the max. DC input voltage (600Vdc). Violating this condition will void the warranty.
- Make sure the polarity of the PV connectors is correct.
- Make sure the PV-switch, breakers of battery, breakers of AC-Backup and AC-Grid are all in their off-states.
- Make sure the PV resistance to ground is higher than 200 KΩ.

The inverter uses the H4 PV connectors. Please follow the picture below to assemble the H4 connectors. PV cable cross section requirements: 4 mm².

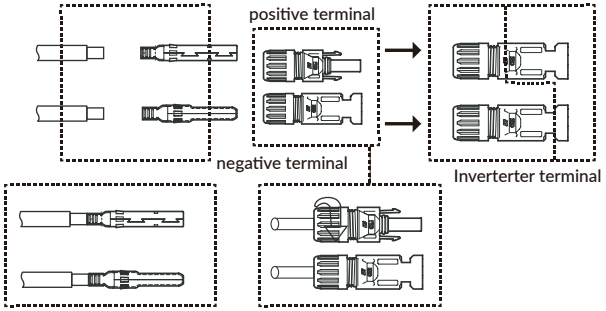

7.7 Battery Power Connection

Please follow the below steps for battery power connection.

1. Disconnect the battery circuit breaker and secure it against reconnection.
2. Take out the battery power cables which are provided by the battery pack.
3. Ensure the correct polarity of power cable of the batteries before connecting to the inverter.
4. Connect the battery power cables to the respective connection ports of the inverter, a "click" sound means fully connection.

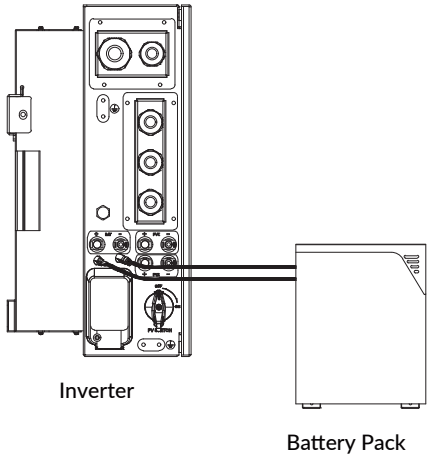

7.8 Battery Pack Expansion Connection

You can install extra batteries up to 6 batteries in a system.
Please install extra SMILE-BAT-8.2PH batteries by side, also batteries can be stacked up to two batteries per column.
Connect the power cables from battery 2 to battery 1.
Connect the BMS communication cables from battery 2 to battery 1.

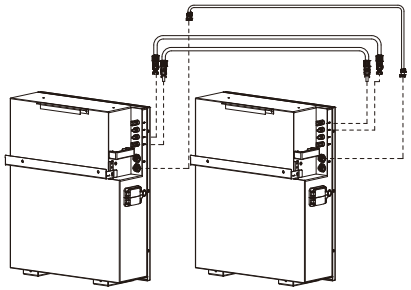

Install extra SMILE-BAT-8.2PH batteries (indoor) by side, without stack

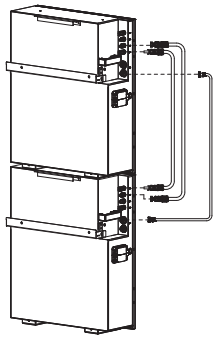

Install extra SMILE-BAT-8.2PH batteries (indoor) with stack

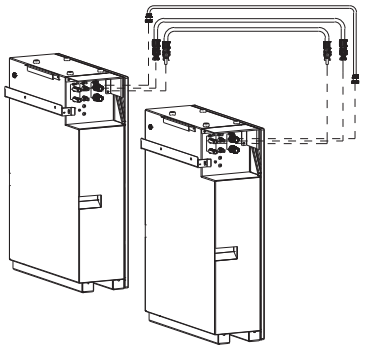

Install extra SMILE-BAT-8.2PH batteries (outdoor) by side, without stack

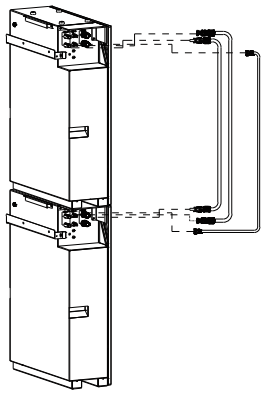

Install extra SMILE-BAT-8.2PH batteries (outdoor) with stack

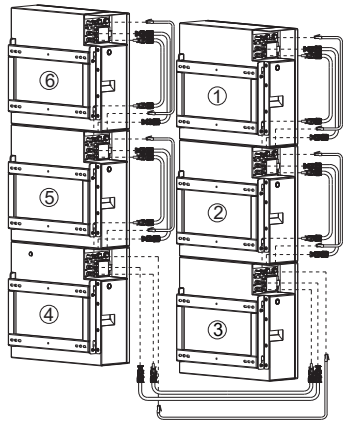

Install extra SMILE-BAT-5PH batteries

Take out the terminal resistor provided by the inverter, insert it to the unused communication port of the last battery.

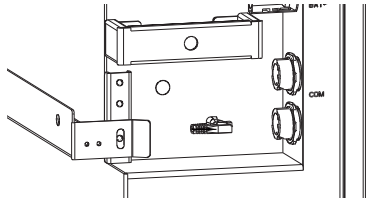

SMILE-BAT-8.2PH (INDOOR)

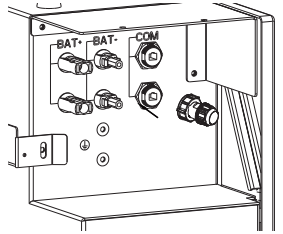

SMILE-BAT-8.2PH (OUTDOOR)

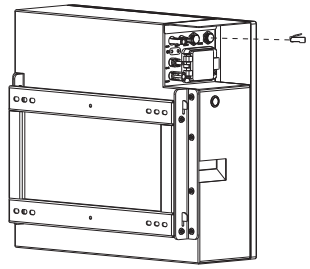

SMILE-BAT-5PH

08 WiFi Setting

8.1 Download and Install APP

1. Android device users can download the APP through major Android application markets such as Google Play.
2. IOS device users can search for “AlphaESS” in App Store and download the APP.

AlphaESS-APP

8.2 Overview of Functions for Installer Account

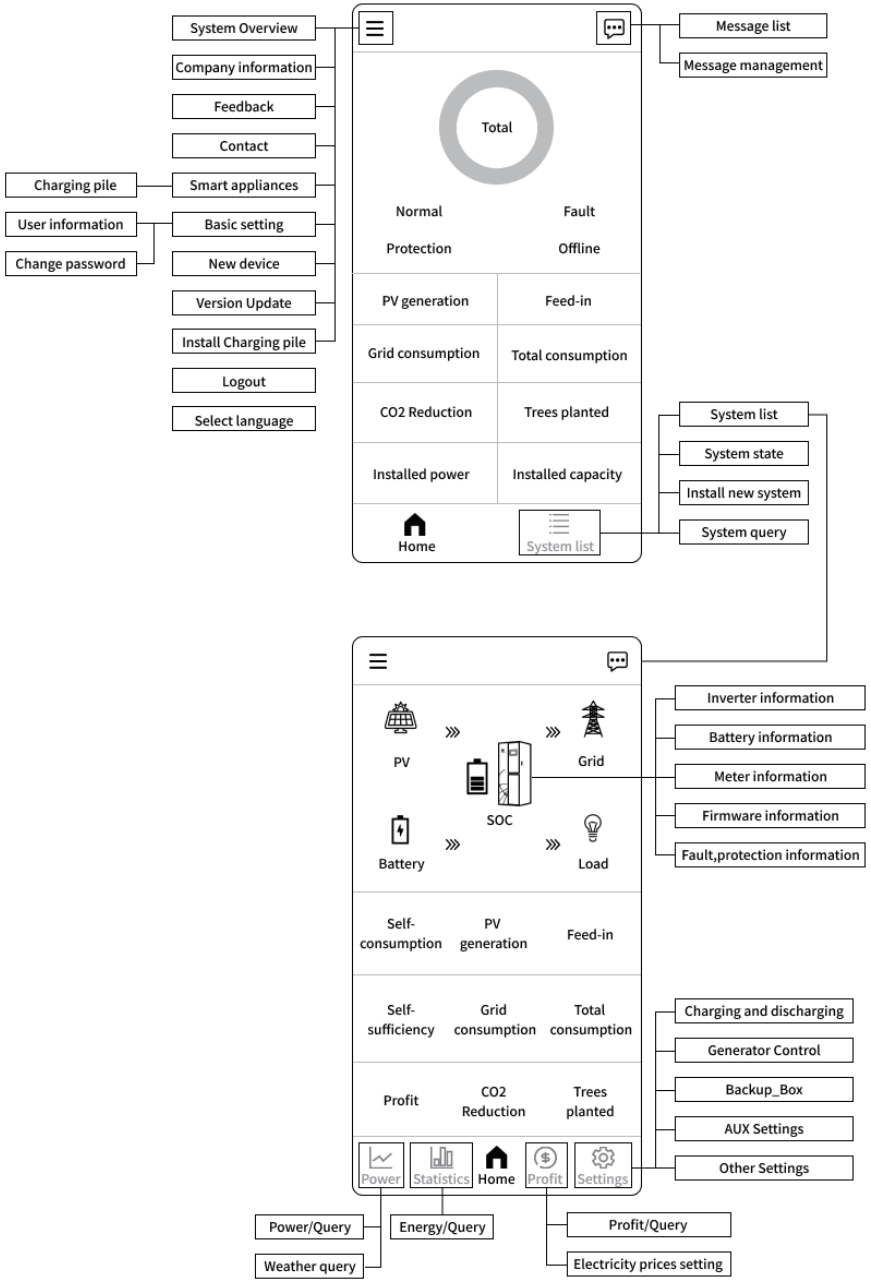

8.3 WiFi Module Setting

This section is for users who have a system with a WiFi module.
AlphaESS App supports network configuration, setting of the system basic parameter, and the viewing of system operation and configuration information.

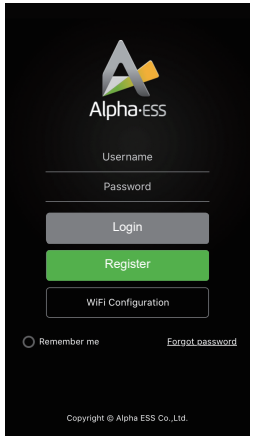

Step 1: Open AlphaESS APP, click the “Wi-Fi Configuration” button and enter the WiFi configuration interface.

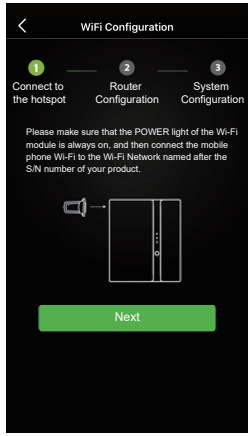

Step 2: After that please check whether your mobile phone has connected to the system’s hotspot.

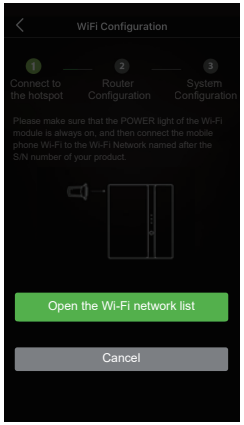

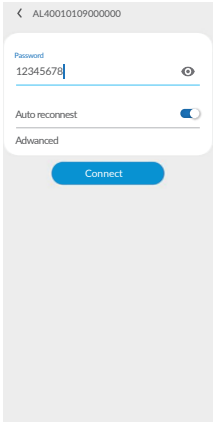



Step 3: If your mobile phone hasn’t connected to the system’s hotspot, please open the Wi-Fi network list. Please find the hotspot named by the product SN in WLAN list then enter the password “12345678” and connect to it. After suc-cessfully setting it, please go back to APP and click “Next”.

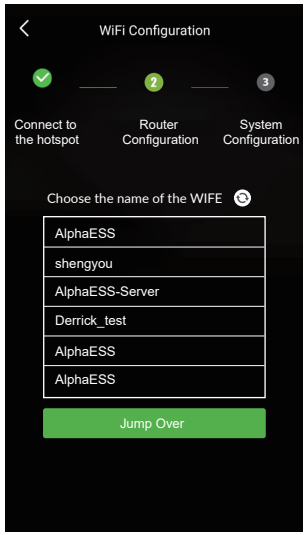

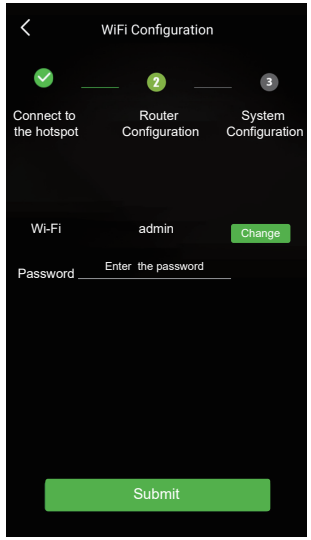

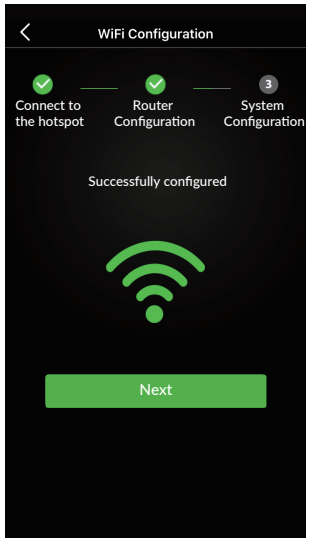

Step 4 Select the WiFi of your home you are using, enter the password, complete the WiFi configuration and submit. If there is no network currently, you can click Jump over to skip the WiFi configuration step and directly set the system parameters.

NOTE:
The system will not be able to connect to the Internet without WiFi config-uration.

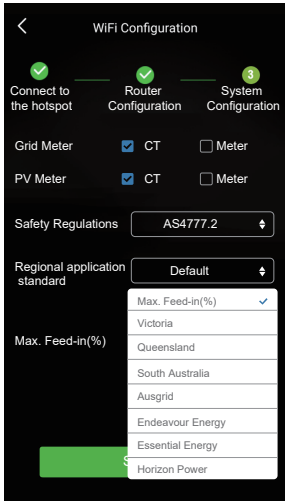

Step 5 Set basic parameters, including PV capacity on the grid side, the type of meters, safety regulations and regional application standard. Click “Submit” when the settings are complete.

Please set the safety standard appropriate for your country or purpose via APP or Web during pilot run.

The safety standard must be set correctly

If you select a safety standard which is not valid for your country and purpose, it can cause a disturbance in the energy storage system and lead to problems with the grid operator. When selecting the safety standard, you must always observe the locally applicable standards and directives as well as the properties of the PV system (e.g. PV system size, grid-connection point).

- If you are not sure which safety standard is valid for your country or purpose, please contact your grid operator for more information

NOTE:
When the safety regulation is set as AS4777.2, the secondary suboptions can be selected according to the region or local grid company (Please refer to Appendix 2).

09 Commissioning

9.1 Checking Before Power-On

No.	Check Item	Acceptance Criteria
1	Mounting environment	The mounting space is proper, and the mounting environment is clean and tidy, without foreign object.
2	Battery pack and inverter mounting	The battery pack and inverter are mounted correctly, securely, and reliably.
3	WiFi mounting	The WiFi module is mounted correctly, securely, and reliably.
4	Cable layout	Cables are routed properly as required by the customer.
5	Cable tie	Cable ties are secured evenly and no burr exists.
6	Grounding	The ground cable is connected correctly, securely, and reliably.
7	Switch and breakers status	The PV switch and battery breakers and all the breakers connecting to the product are OFF.
8	Cable connections	The AC cable, PV cable, battery cable, and communication cables are connected correctly, securely, and reliably.
9	Unused power terminals	Unused power terminals are blocked by watertight caps.

9.2 Check the Running State

Prerequisites

Before switching on the AC breaker between the inverter and the grid, check that the AC voltage on the power grid side of the AC breaker is within the specified range.
Please select the acceptance of installation on site when the light intensity is strong.

Procedure

1. Ensure that the PV switch and battery breakers of the product and all the breakers connecting to the product are OFF.
2. Check the grid-connected state of the product
   Short press the power button on the left side of battery pack, then switch on the battery breaker of battery pack.
   Switch on the battery breaker which is located at the left of the inverter.
   Switch on the PV switch which is located at the left of the inverter.
   Switch on the external AC breaker between the grid and the inverter.
   Set the operating parameters through the APP.
   Wait about 3 minutes for the inverter to enter the grid-connected state, and observe the indicators states on the display panel of the inverter. At this time, the following 4 LEDs ("SYS TEM", "BATTERY", "METER", "COM") on the display panel is always on.

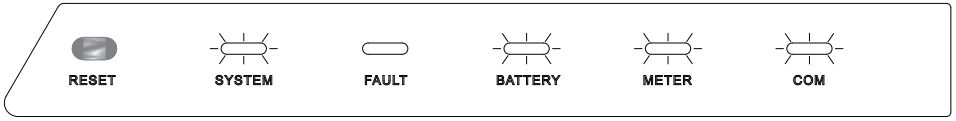

3. Check the UPS state of the product
   Switch off the external AC breaker between the grid and the inverter.
   The inverter will enter the UPS state at once, and observe the indicators states on the display panel of the inverter. At this time, the following 3 LEDs ("SYSTEM", "BATTERY", "COM") on the display panel is always on.

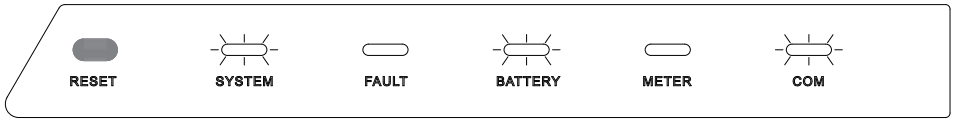

4. Check the wiring of the backup load
   Switch on the external AC breaker between the load and the inverter.
   Please connect a low-power electrical appliance to the socket of backup load.
   If the electrical appliance can work normally, it means that the wiring of the backup has been installed successfully.

NOTICE
During commissioning, if the LED indictors on the display panel of the inverter or the battery pack show red, please refer to Section 10.2 for troubleshooting.

9.3 Powering Off the Product

WARNING
After the inverter and battery pack is powered off, the remaining electricity and heat may still cause electric shocks and body burns. Therefore, put on protective gloves and operate the product 5 minutes after the power-off.

Procedure

1. Long press the power button of battery pack for 6 seconds, then switch off the battery breaker of battery pack.
2. Switch off the battery breaker which is at the left bottom of the inverter.
3. Switch off the PV switch at the left bottom of the inverter.
4. Switch off the PV switch between the PV string and the inverter if there is any.
5. Switch off the AC breaker between the inverter and the load.
6. Switch off the AC breaker between the inverter and the grid.

10 Maintenance and Troubleshooting

10.1 Routine Maintenance

Normally, the inverter and battery pack need no maintenance or calibration.
However, in order to maintain the accuracy of the SOC, it is recommended to perform a full charge calibration for SOC (charging battery until the charging power is 0) on the battery at regular intervals (such as two weeks).
Disconnect the inverter and battery pack from all power sources before cleaning. Clean the housing, cover and display with a soft cloth.
To ensure that the inverter and battery pack can operate properly in the long term, you are advised to perform routine maintenance on it as described in this chapter.

Maintenance checklist

Check Item	Acceptance Criteria	Maintenance Interval
Product cleanliness	The heatsink of the inverter are free from obstacles or dust.	Semiannually or once per year
Product visible damage	The inverter and battery pack are not damaged or deformed.	Semiannually
Product running status	1. The inverter and battery pack operate with no abnormal sound. 2. All parameters of the inverter and battery pack are correctly set. Perform this check when the inverter and battery pack is running.	Semiannually
Electrical connections	1. Cables are securely connected. 2. Cables are intact, and in particular, the cable jackets touching the metallic surface are not scratched. 3. Unused PV input terminals and COM ports of the inverter, and power and COM terminals of the battery pack are locked by watertight caps if the product is mounted outdoor.	The first maintenance is needed 6 months after the initial commissioning. And then make it semiannually or once per year.

CAUTION
Risk of burns due to hot heatsink and housing of the inverter
The heatsink and housing can get hot during operation.
★ During operation, do not touch any parts other than the cover of the inverter.
★ Wait approx. 30 minutes before cleaning until the heatsink has cooled down.

10.2 Troubleshooting

10.2.1 Inverter Error Troubleshooting

Error No.	Error description	Solution
100000	Grid_OVP	1. Check whether Grid is abnormal. 2. Confirm whether the grid cable connection is normal. 3. Restart inverter and ensure whether the fault is existing.
100001	Grid_UVP	
100002	Grid_OFP	
100003	Grid_UFP	
100004	Phase_locked_fault	
100005	BUS_OVP1	1. Check whether the input voltage of PV1 and PV2 ex-ceeds 550V. 2. If the first one does not exist, restart the inverter to see if the fault still exists. If it still exists, please call the service center.
100007	Insulation_fault	1. If the power on time fails in the morning, it may be caused by wet weather. 2. Use a multi-meter to test the impedance of the ground to the housing. If the impedance is not close to 0, confirm that there is a connection problem between the ground wire and the housing. 3. Test the impedance of ground to PV+ / PV- / BAT+ / BAT- with a multi-meter. If the imped-ance is less than 25 KΩ, check whether the connection of each port is correct. 4. Confirm to install the inverter according to the manual. 5. Restart the inverter to see if the fault still exists. If it still exists, contact customer service.
100008	GFCI_fault	Restart the inverter to see if the fault still exists. If it still exists, please call the service center.
100009	Leakage current test failure	
100010	Grid relay fault	1. Confirm to install the inverter according to the manual. 2. Restart the inverter to see if the fault still exists. If it still exists,please call the service center.
100011	Over_Temperature	1. Try to lower the ambient temperature. 2. Confirm to install the inverter according to the manual. 3. After the inverter is powered off and waiting for 30 minutes, then restart it. If the fault still exists, please call the service center.
100012	PV_Reverse	Check whether the battery connection is reversed.
100013	BAT_Reverse	Check whether the battery connection is reversed.

Error No.	Error description	Solution
100017	MPPT1_OVP	Check the PV1 voltage. If it exceeds 585VDC, reduce the number of PV modules.
100018	MPPT1_SW_OCP	1. Try to reduce the PV power. 2. Restart the inverter to see if the fault still exists. If it still exists, please call the service center.
100019	MPPT1_HW_OCP	
100020	MPPT1_OTP	1. Try to lower the ambient temperature. 2. Make sure that the inverter is installed according to the manual and there is no shelter around the inverter. 3. After the inverter is powered off and waiting for 30 minutes, then restart it. If the fault still exists, please call the service center.
100021	MPPT2_OVP	Check the PV2 voltage. If it exceeds 585V, reduce the number of PV modules
100022	MPPT2_SW_OCP	1. Try to reduce the PV power. 2. Restart the inverter to see if the fault still exists. If it still exists, please call the service center.
100023	MPPT2_HW_OCP	
100024	MPPT2_OTP	1. Try to lower the ambient temperature. 2. Make sure that the inverter is installed according to the manual and there is no shelter around the inverter. 3. After the inverter is powered off and waiting for 30 minutes, then restart it. If the fault still exists, please call the service center.
100025	BAT_OVP	Check whether the actual battery voltage exceeds the battery charging cut-off voltage by more than 20V.
100026	BAT_UVP	Check whether the actual battery voltage is lower than the battery discharge cut-off voltage.
100027	Battery_lose	Confirm that the wiring is normal, and check whether the battery voltage sampling value is less than 75V.
100028	BAT_OTP	1. Try to lower the ambient temperature. 2. Make sure that the inverter is installed according to the manual and there is no shelter around the inverter. 3. After the inverter is powered off and waiting for 30 minutes, then restart it. If the fault still exists, please call the service center.
100029	BAT1_charge_OCP	1. Try to reduce battery power. 2. Restart the inverter to see if the fault still exists. If it still exists, please call the service center.
100030	BAT1_discharge_OCP	
100031	BAT2_charge_OCP	
100032	BAT2_discharge_OCP	
100033	BAT1_HW_OCP	
100034	BAT2_HW_OCP	

Error No.	Error description	Solution
100035	INV_OTP	1. Try to lower the ambient temperature. 2. Make sure that the inverter is installed according to the manual and there is no shelter around the inverter. 3. After the inverter is powered off and waiting for 30 minutes, then restart it. If the fault still exists, please call the service center.
100036	INV_OVP	The effective value of grid voltage exceeds the maximum protection value of national standard voltage.
100037	INV_UVP	1. Whether the off grid output terminal is short circuited or has impact load. 2. Restart the inverter to see if the fault still exists. If it still exists, please call the service center.
100038	Output_DC_ over_current	Restart the inverter to see if the fault still exists. If it still exists, please call the service center.
100039	INV_OCP	1. Check whether the off grid output terminal is overloaded, short circuited or has impact load. 2. Restart the inverter to see if the fault still exists. If it still exists, please call the service center.
100040	INV_HW_OCP	Restart the inverter to see if the fault still exists. If it still exists, please call the service center.
100041	Output_DC_ over_voltage	
100042	Output_short	1. Use a multimeter to test the impedance of the off grid output. If it is small, check whether the wiring is correct. 2. Restart the inverter to see if the fault still exists. If it still exists, please call the service center.
100043	Output_overload	1. Check whether the load exceeds the rated power. 2. Restart the inverter to see if the fault still exists. If it still exists, please call the service center.
110000	Bat over-voltage alarm	Check that the actual battery voltage is 10V higher than the battery charging cut-off voltage
110001	Bat under-voltage alarm	Check that the actual battery voltage is 10V higher than the battery discharging cut-off voltage
110002	output_overload_alarm	Check whether the load exceeds 0.95 of the rated power
110003	abnormal_temperature_ sensor	Restart the inverter to see if the fault still exists. If it still exists, please call the service center.
110004	dc_power_alarm	1. Check whether the total power of the battery and PV is less than the load power. 2. Restart the inverter to see if the fault still exists. If it still exists, please call the service center.

Error No.	Error description	Solution
110005	battery_stops_ running_alarm	1. If the battery is not connected, use a multimeter to measure whether there is voltage at the battery terminal. 2. Restart the inverter to see if the fault still exists. If it still exists, please call the service center.
110006	overtempera- ture_alarm	1. Try to lower the ambient temperature. 2. Make sure that the inverter is installed according to the manual and there is no shelter around the machine. 3. After the inverter is powered off and waiting for 30 minutes, then restart it. If the fault still exists, please call the service center.

10.2.2 Battery Protection Description

LED Indictor	Error Code	LED Display	Description	Troubleshooting
Yellow LEDs flash once per second.	1		Temperature difference	Wait for automatical recovery. If the problem is not be solved yet,please call the service center.
	3		Hardware error	Stop discharging and charging until this code is eliminated and wait for the temperature to drop.
	4		Low-tempera-tu re discharge	Stop discharging until this code is eliminated and wait for the temperature to rise
	5		Over-current charge	Wait for automatical recovery. If the problem is not be solved yet, please call the service center.
	6		Over-current discharge	
	8		Cell overvoltage	
	9		Cell under voltage	Stop discharging and call the service immediately.
	11		Low-tempe-rat ure charge	Stop discharging until this code is eliminated and wait for the temperature to rise.

10.2.3 Battery Error Description

LED Indictor	Error Code	LED Display	Description	Troubleshooting
Red LEDs flash once per second.	Error 01		Hardware error	Wait for automatical recovery. If the problem is not be solved yet, please call the service center.
	Error 02		Hardware error	
	Error 03		Hardware error	
	Error 05		Hardware error	
	Error 06		Circuit breaker open	Switch on circuit breaker after powering off the battery.
	Error 08		LMU disconnect (slave)	Reconnect the BMS communication cable.
	Error 09		SN missing	Call for service.
	Error 10		LMU Disconnect (master)	Reconnect the BMS communication cable.
	Error 11		Software ver-sion inconsistent	Call for service.
	Error 12		Multi master	Restart all batteries.
	Error 13		MOS over temperature	Power off the battery and power on the battery after 30 minutes.
	Error 14		Insulation fault	Restart battery and in case the problem is not resolved, call for service.
	Error 15		Total voltage fault	Restart battery and in case the problem is not resolved, call for service.

NOTE:
In the case of work mode, if the protection code 09 appears, please press the power button 5 times within 10 seconds, the BMS will be forced to turn on the MOSFET of discharge so that the inverter can detect the battery open voltage and charge the battery.

11 Uninstallation & Return

11.1 Removing the Product

Procedure

Step 1 Power off the product by following instructions in chapter 9.3 Powering Off the Product.
Step 2 Disconnect all cables from the product, including communication cables, PV power cables, battery power cables, AC cables, and PE cables.
Step 3 Remove the WiFi module from the inverter.
Step 4 Remove the inverter from the wall bracket.
Remove the battery pack from the wall bracket.
Step 5 Remove the mounting bracket.

11.2 Packing the Product

If the original packaging is available, put the battery pack or inverter inside it and then seal it by using adhesive tape.
If the original packaging is not available, put the battery pack or inverter inside a suitable cardboard box and seal it properly.

11.3 Disposing of the Product

If the battery pack or inverter service life expires, dispose of it according to the local disposal rules for electrical equipment and electronic component waste.
Dispose of the packaging and replaced parts according to the rules at the installation site where the device is installed.
Do not dispose the inverter and the battery pack with normal domestic waste.


Li-Ion



12 Specification

12.1 Datasheet of Hybrid Inverter SMILE-S6-HV-INV

Item	SMILE-S6-HV-INV (OUTDOOR)	SMILE-S6-HV-INV (INDOOR)*
Input DC (PV side)		
Recommended max. PV power	9000 W	7500 W
Max. PV input voltage	580 V	
Rated voltage	360 V	
Start-up voltage	100 V	
MPPT voltage range	100 ~ 550 V	
Max. Input Current Per MPPT	15 A / 15 A	
Max. Short Circuit Current Per MPPT	18.75 A /18.75 A	
MPPT Number	2	
Max Input Strings Number Per MPPT	1	
Battery		
Battery Type	Li-ion	
Battery Voltage Range	100 ~ 400 V	
Maximum Charging Power	6 kW	5 kW
Maximum Charge/ discharge current	40 A / 40 A	
Communication	CAN	
Output AC (Back-up)		
Rated output power	6 kW	4.6 kW
Max. Apparent Output Power	6 kVA	4.6 kVA
Back-up switch time	<10 ms	
Rated output voltage	L/N/PE, 230 V	
Rated Frequency	50/60 Hz	
Rated output current	26.1 A	21.7 A
THDv(@linear load)	3%	
Input AC (Grid side)		
Rated Output Current	L/N/PE, 230 V	
Rated Frequency	50/60 Hz	

Rated Input Power	12 kW	9.2 kW
Max. input current	52.2 A	40 A
Output AC(Grid side)		
Rated output power	6 kW	4.6 kW
Max. Apparent Output Power	6 kVA	4.6 kVA
Operation Phase	Single phase	
Rated Grid Voltage	L/N/PE, 230 V	
Grid Voltage Range	180 ~ 270 V	
Rated Grid Frequency	50 / 60 Hz	
Rating Grid Output Current	26.1 A	20 A
Power Factor	>0.99 (0.8 leading - 0.8 lagging)	
Thdi	< 3%	
Protection Class	I	
Overvoltage Category	III	
Efficiency		
Max Efficiency	>97%	
EU Efficiency	>96.2%	
Protection		
Anti-Islanding Protection	Integrated	
Insulation Resistor Detection	Integrated	
Residual Current Monitoring Unit	Integrated	
Output Over Current Protection	Integrated	
Output Short Protection	Integrated	
Output Overvoltage Protection	Integrated	
DC Reverse Polarity Protection	Integrated	
PV Overvoltage Protection	Integrated	
Battery Reverse Protection	Integrated	
PV Switch	Integrated	
Battery Breaker	Integrated	

General data		
Dimensions(W*H*D)	580*440*230 mm	
Weight	25 kg	
Topology	Transformerless	
Operation Temperature Range	-25 ~ +60 °C	
Ingress Protection	IP65	IP21
Noise Emission	<30 dB(A) @1m	
Cooling Concept	Natural convection	
Max. Operation Altitude	3000 m	
Grid Connection Standard	G98/G99, VDE-AR-N 4105, EN 50549-1,VDE 0126, RD 1699, CEI 0-21, C10/11, NRS 097-2-1, Tor Erzeuger, MEA, PEA, AS/NZW 4777.2, IEEE1547	
Safety/EMC Standard	IEC62040-1, IEC62109-1/-2.AS3100, NB/T 32004, EN61000-6-2, EN61000-6-3	
Features		
DC Connection	Amphenol H4 connectors	
AC Connection	Terminal block	
BAT Connection	Vaconn D4 connectors	
Communication	LAN, WiFi (optional)	
Warranty	5 years standard	

* Only for Germany

12.2 Datasheet of Battery Pack SMILE-BAT-8.2PH

Item	SMILE-BAT-8.2PH (OUTDOOR)	SMILE-BAT-8.2PH (INDOOR)*
Battery Type	LFP (LiFePO4)	
Weight	88 kg	72 kg
Dimension (W*H*D)	580*820*213 mm	580*730*200 mm
Ingress Protection	IP65	IP21
Warranty	5 Year Product Warranty, 10 Year Performance Warranty	
Energy Capacity	8.2 kWh	
Usable Capacity	7.8 kWh	
Depth of Discharge (DoD)	95%	
Nominal Voltage	256 V	
Operating Voltage Range	240~288 V	

Internal Resistance	≤90 mΩ	
Max. Charging/ Discharging Current**	1.2C (38.4 A)	1C (32 A)
Operating Temperature Range	Charge：0＜T＜50°C / Discharge：-10＜T＜50°C	
Relative Humidity	0% ~ 95%	15% ~ 85%
Monitoring Parameters	System voltage, current, cell voltage, cell temperature, PCBA temperature	
Communication	CAN and RS485 compatible	
Safety	IEC62619(Cell), IEC 62619(Pack)	
Transportation	UN38.3	

* Only for Germany
** Max. charge/discharge current derating will occur related to temperature and SOC.

12.3 Datasheet of Battery Pack SMILE-BAT-5PH

Item	SMILE-BAT-5PH (INDOOR)
Battery Type	LFP (LiFePO4)
Weight	50 kg
Dimension (W*H*D)	580*530*226 mm
Ingress protection	IP21
Warranty	5 Year Product Warranty, 10 Year Performance Warranty
Energy Capacity	4.9 kWh
Usable Capacity	4.7 kWh
Depth of Discharge(DoD)	95%
Nominal Voltage	153.6 V
Operating Voltage Range	144 ~ 172.8 V
Internal Resistance	≤ 65 mΩ
Max. Charging/ Discharging Current*	1C (32 A)
Operating Temperature Range	Charge：0＜T＜50°C / Discharge：-10＜T＜50°C
Relative Humidity	15% ~ 85%
Monitoring Parameters	System voltage, current, cell voltage, cell temperature, PCBA temperature
Communication	CAN and RS485 compatible
Safety	IEC62619(Cell), IEC 62619(Pack)
Transportation	UN38.3

* Max. charge/discharge current derating will occur related to temperature and SOC.

Appendix 1:Communication Connection Figure

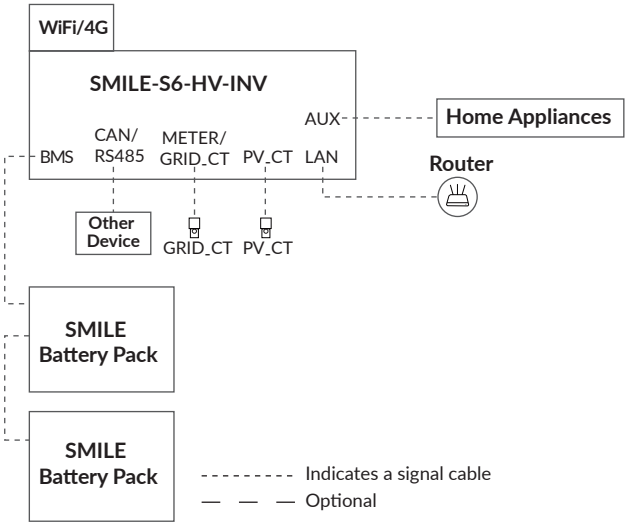

Connect the CT

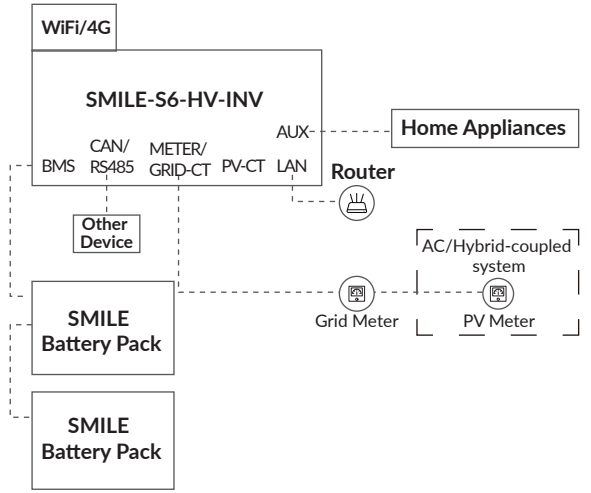

Connect the meter

NOTICE

★ If the extra PV inverter is not used, the system is suitable for DC mode.

★ If you have the extra PV inverter, the system is suitable for AC or Hybrid mode.

Appendix 2: Regional application Standard

Regional application Standard	Electric Company
Australia A	N/A
Australia B	N/A
Australia C	N/A
New Zealand	N/A
Victoria	Ausnet Services
	Jemena
	Citipower
	Powercor
	United Energy
Queensland	Energex
	Ergon Energy
South Australia	SA Power Networks
New South Wales	Ausgrid
	Endeavour Energy
	Essential Energy
Western Australia	Horizon Power
	Western Power
Australian Capital Territory	Evoenergy
Northern Territory	NT Power and Water
Tasmania	Tas Networks

- Choose the correspond Regional application Standard, the power quality modes Volt-var and Volt-Watt will running automatically. (Only for Australia)