EN 64100357

V01

QUICK INSTALLATION GUIDE

Energy System (STORION-G2-H30/H50)

1. Product Overview

(1).Front door
(2).Indicator
(3).SCADA
(4).EPO
(5).Front door lock
(6).Battery cabin air outlet
(7).Botton panel
(8).Lifting ring
(9).Grounding
(10).Backdoor
(11).Backdoor lock
(12).Battery cabin air inlet
(13).PCS installation location
(14).Cable protective cover installation location

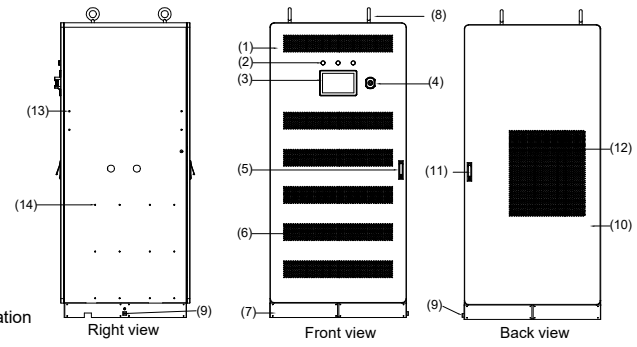

1.1 Packing List

S1 Battery Terminating resistor (X1)	S2 HV-BOX Terminating resistor (X1)	S3 Cable protective cover (X2)	S4 BAT-BAT Communication Cable (X1)	S5 BAT Handling Hook (X4)	S6 M8 screws (X1), M6 screws (X12)
S7 Ground cable (X1)	S8 Touchscreen pen (X1)	S9 (X3), Botton panel (X1)	S10 M4 screws (X32)	A1 Meter (X1)	A2 3 X CT (X1)

2. Installation Tools

Multimeter	Insulation meter	Diagonal pliers	PH2.5x110mm PH2.5 Screwdriver	Sleeve combination tools	PH2×200mm PH2 Screwdriver
Torque driver	Wire Stripper	Network Wire Clamp	Crimping Plier	Tape Measure	Hammer drill

3. M38210-SC &M7790-S Product Overview

(1).Battery sample cable outlet x2
(2).Mounting hole x4
(3).BLMU
(4).Handle x2
(5).Fan x2
(6).Power plug-in x2
(7).BLMU Communication port 1
(8).BLMU Communication port 2
(9).BAT handling hook connection point x4

Note：The battery appearance of M38210-SC and M7790-S are similar

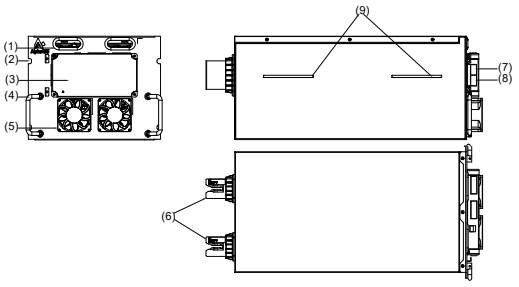

3.1 Packing List

B1 BLMU to BLMU Communication Cable (X1)	B2 Battery fixing screw M6*16(X4)

4. PCS

(1).Display and LED panel
(2).Hanger
(3).DC switch
(4).PV input terminal
(5).Battery input terminal
(6).COM1 port
(7).COM2 port
(8).COM3 port(reserve)
(9).On-grid output terminal
(10).Back-up output terminal

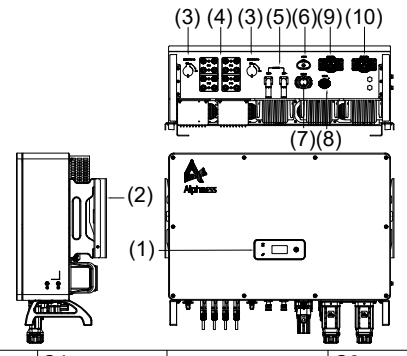

4.1 Packing List

C1 M10 screws&nuts(X4), Inverter bracket (X1), M6 screws (X2)	C2 AC connector set (X2)	C3 PV terminal 8 pairs	C4 Monitoring device (X1)	C5 10m spare communication cable (X1)	C6 COM2 connector (X1)	C7 COM3 connector (X1)

5. Installing the Product

5.1 Installation of grounding cable and negative pole connection

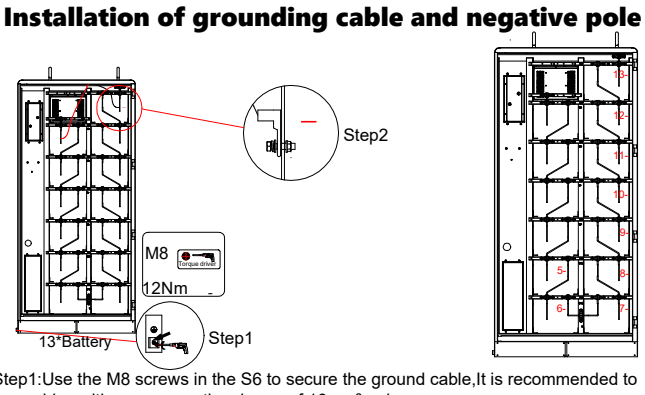

Note:The figure shows the installation layout of the negative electrodes for different quantities of batteries.

Suggestion:It is recommended that 2 to 3 people install it.

Step1:Use the M8 screws in the S6 to secure the ground cable,It is recommended to use cables with a cross-sectional area of 16mm² or larger.
Step2:Install the negative cable to the designated position based on the number of batteries.

5.2 Battery installation

Install the batteries in various positions. After you have installed them, secure the batteries on the battery rack using B2 screws.

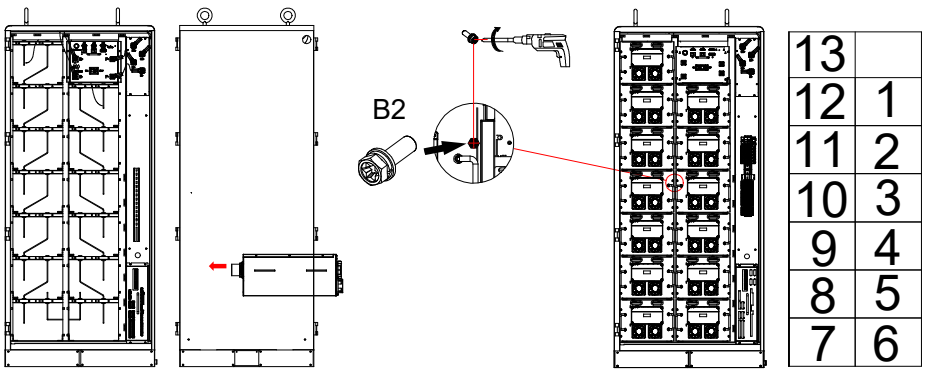

Step3:Battery installation

5.3 Battery communication connection

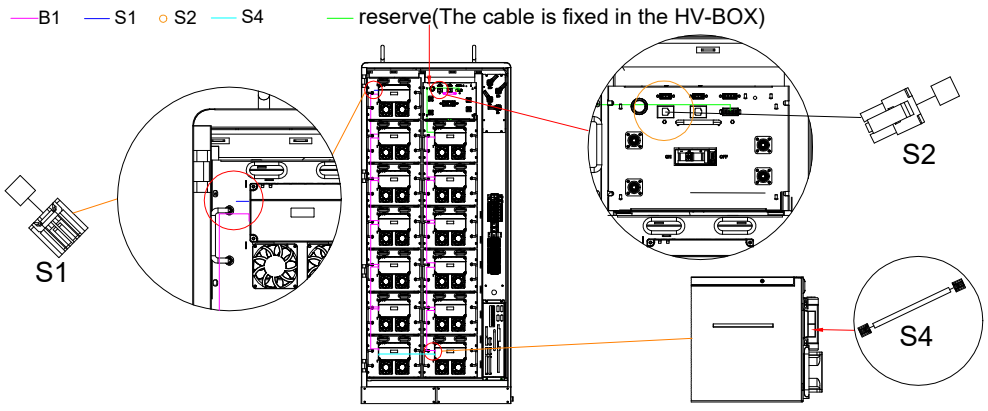

Step4:Battery communication cable

5.4 AC auxiliary source connoction

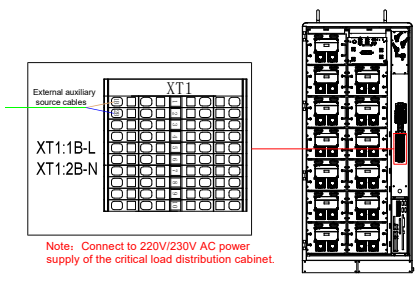

Note：Connect to 220V/230V AC power supply of the critical load distribution cabinet.

Step5:Connect AC auxiliary power cable

5.5 SCADA Enthernet port

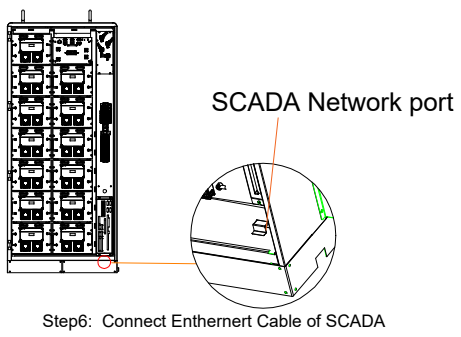

Step6: Connect Enthernert Cable of SCADA

5.6 Fix the PCS&Grounding Terminal Connection

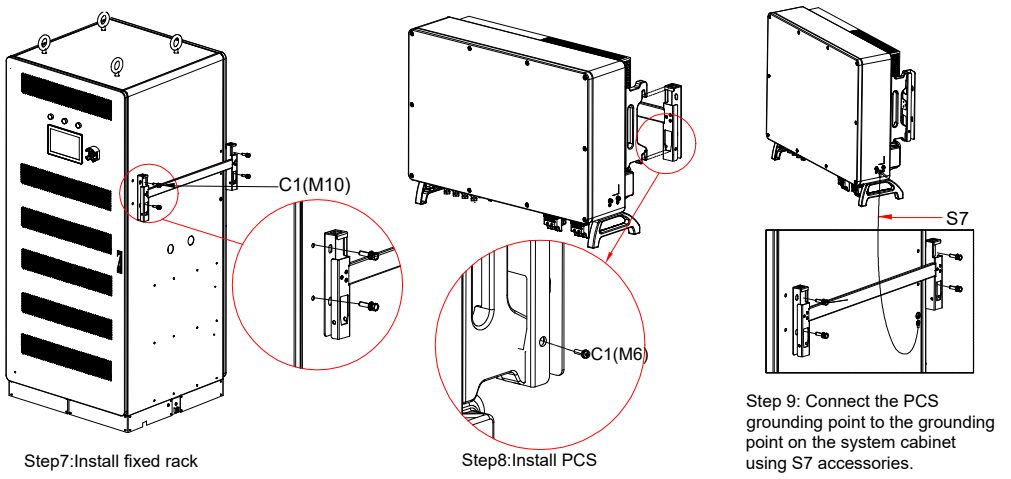

Step7:Install fixed rack

Step8:Install PCS

Step 9: Connect the PCS grounding point to the grounding point on the system cabinet using S7 accessories.

5.7 DC side power cable connection

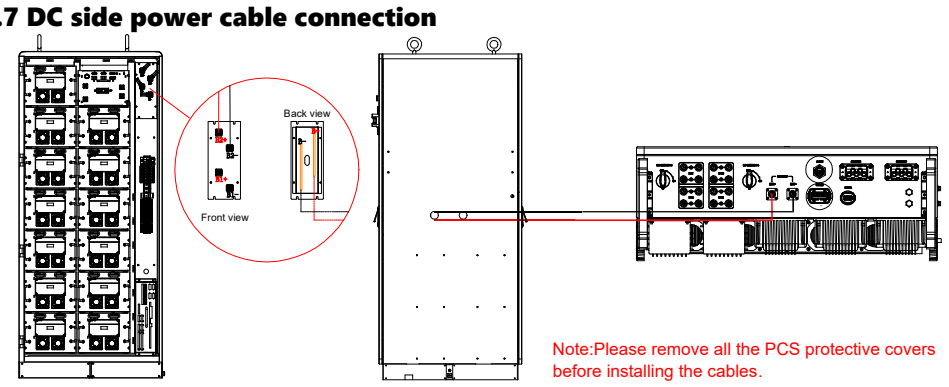

Note:Please remove all the PCS protective covers before installing the cables.

5.8 PCS communication cable connection

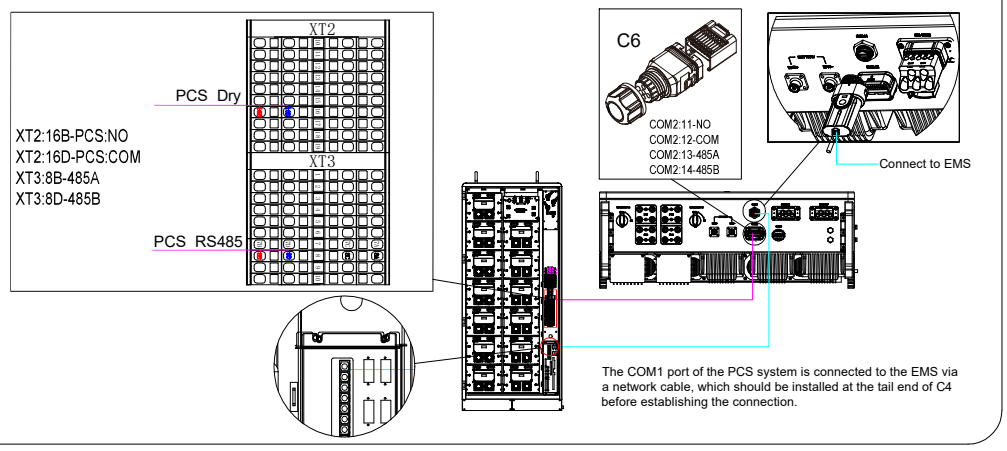

The COM1 port of the PCS system is connected to the EMS via a network cable, which should be installed at the tail end of C4 before establishing the connection.

5.9 Grid Meter connection

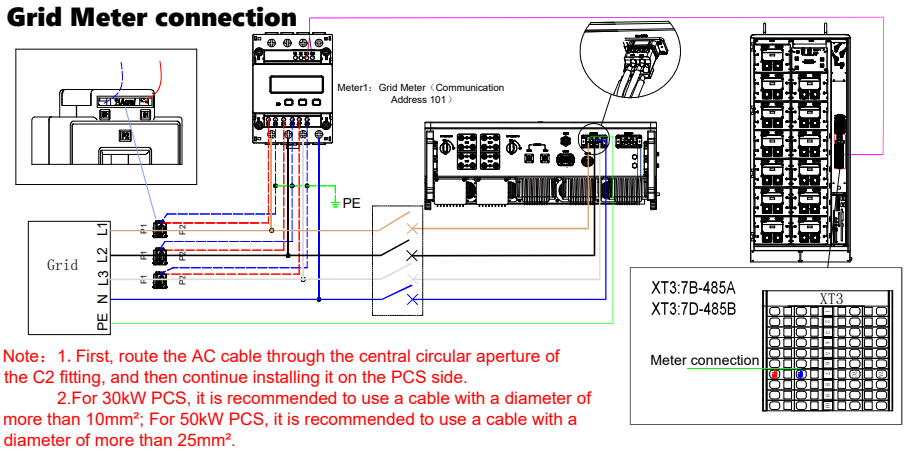

Note：1. First, route the AC cable through the central circular aperture of the C2 fitting, and then continue installing it on the PCS side.
2.For 30kW PCS, it is recommended to use a cable with a diameter of more than 10mm²; For 50kW PCS, it is recommended to use a cable with a diameter of more than 25mm².

Suggestion: Install a circuit breaker between grid and the PCS;note that the Alpha do not provide the circuit breaker ,If a circuit breaker is installed,a leakage protector is not needed between the power grid and the PCS.

5.10 Load side connection

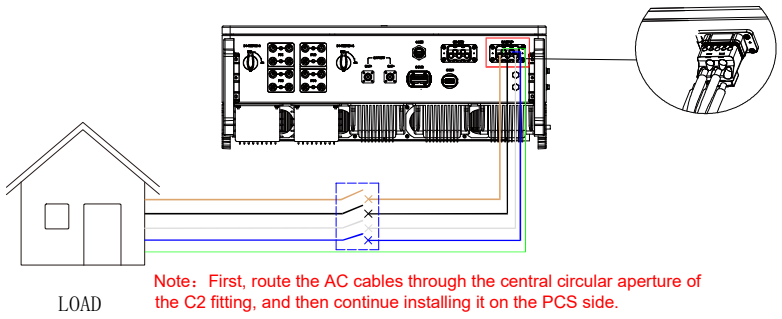

Note：First, route the AC cables through the central circular aperture of the C2 fitting, and then continue installing it on the PCS side.

Suggestion: Install a circuit breaker between load and the PCS;
note that the Alpha do not provide the circuit breaker ,If a circuit breaker is installed, a leakage protector is not needed between the power load and the PCS.

5.11 Dual power system AC side conncection(Dual Power system)

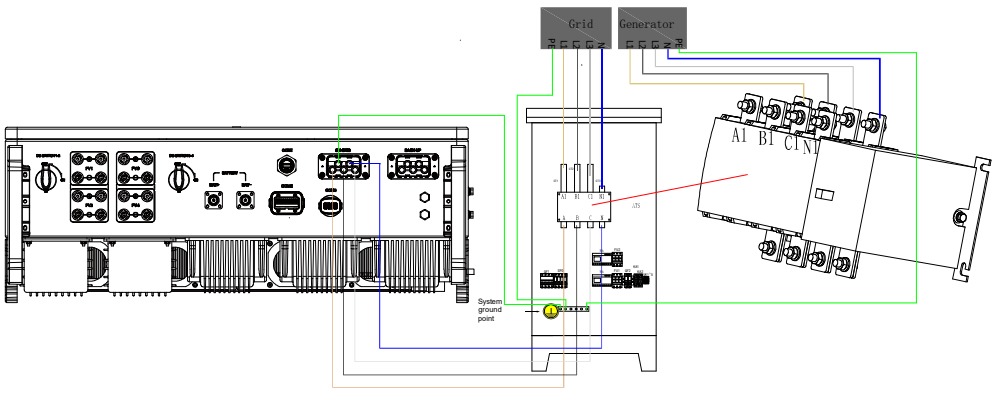

5.12 ATS dry contact connection(Dual Power system)

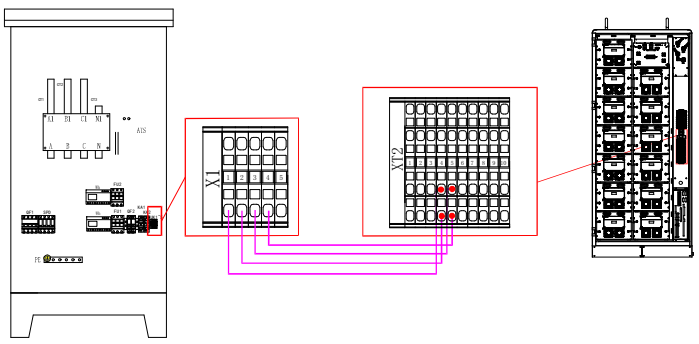

ATS	System Cabinet
X1:1	XT2:4B
X1:2	XT2:4D
X1:3	XT2:5B
X1:4	XT2:5D

5.13 Diesel generator dry contact connection(Off-Grid with DG)

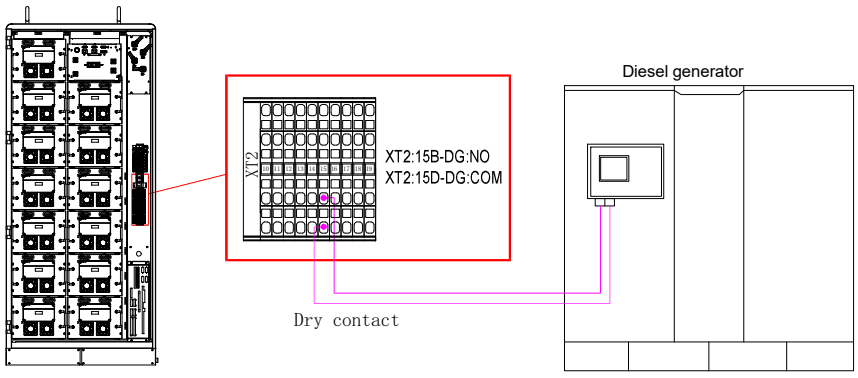

5.14 Parallel cable connection(On-Grid)

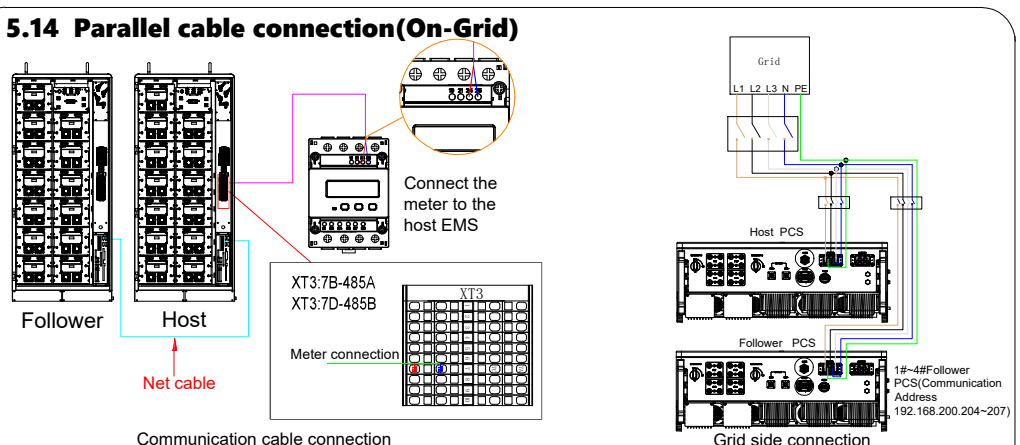

Note：For the remaining cables, refer to the stand-alone system

5.15 Temperature controller connection（Optional）

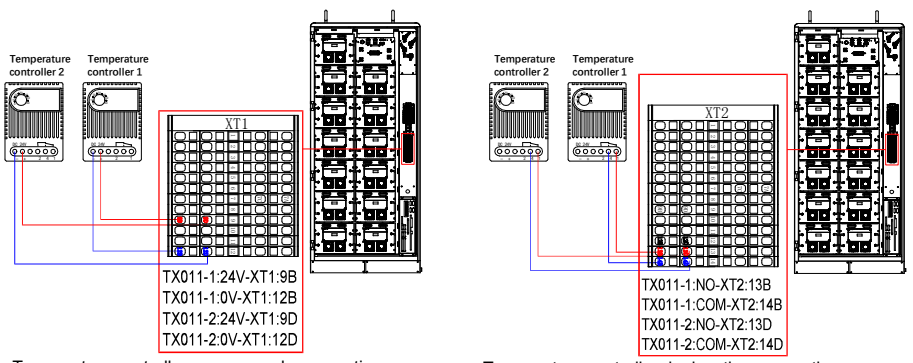

5.16 Cable protective cover installation

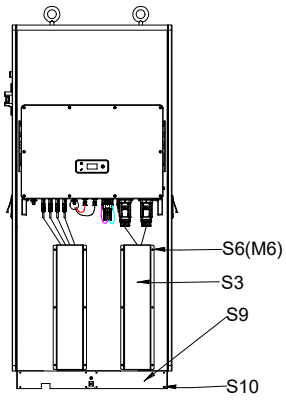

1.Use the S3 and S6 to fasten all cables securely inside the cable protective cover.
2.Use S9 and S10 to secure all the botton panel under the system cabinet.

Note:Install the PV side cable according to the steps in the PCS installation manual.

5.17 External cable connetion

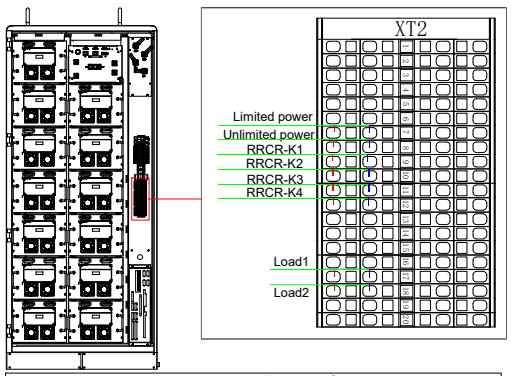

XT2:7B-Limited power:NO	XT2:9B-RRCR-K1+
XT2:7D-Limited power:COM	XT2:9D-RRCR-K1-
XT2:8B-Unlimited power:NO	XT2:10B-RRCR-K2+
XT2:8D-Unlimited power:COM	XT2:10D-RRCR-K2-
XT2:19B-Load1+	XT2:11B-RRCR-K3+
XT2:19D-Load1-	XT2:11D-RRCR-K3-
XT2:20B-Load2+	XT2:12B-RRCR-K4+
XT2:20D-Load2-	XT2:12D-RRCR-K4-

6.2 Power off the system

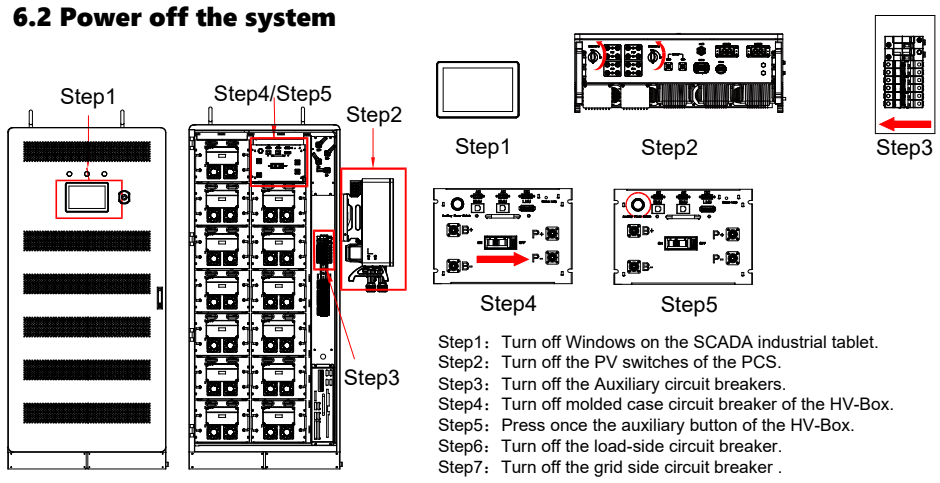

Step1：Turn off Windows on the SCADA industrial tablet.
Step2：Turn off the PV switches of the PCS.
Step3：Turn off the Auxiliary circuit breakers.
Step4：Turn off molded case circuit breaker of the HV-Box.
Step5：Press once the auxiliary button of the HV-Box.
Step6：Turn off the load-side circuit breaker.
Step7：Turn off the grid side circuit breaker .

6. Commissioning

6.1 Power on the system

Note:Before powering on,ensure that the switch on the back of the SCADA screen is turned on and that all other switches are turnde off.

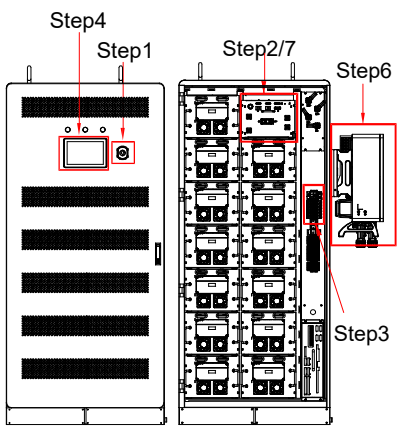

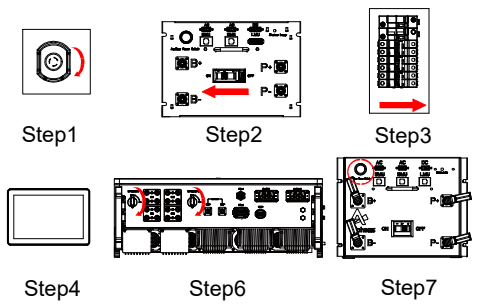

Step1：Rotate the EPO button to reset it .
Step2：Turn on the molded case circuit breaker of the HV-Box.
Step3：Turn on the Auxiliary circuit breakers.
Step4：Follow the SCADA interface guide to perform operations on the screen.
Step5：Wait for about 3 minute, then check to ensure that the battery has no errors before proceeding to step 6. (On the SCADA screen, observe whether the HV-Box relay is closed.)
Step6：Turn on the PV switches of the PCS.
Step7：Press once the auxiliary button of the HV-Box.
Step8：After ensuring that all systems are functioning properly, first turn on the grid-side circuit breaker, and then turn on the load-side circuit breaker

7. For more information, please download System User Manual and System Installation Manual

System Installation Manual

System User Manual

Alpha C&I Cloud