EN 64100360

V01

QUICK INSTALLATION GUIDE

Energy System (STORION-G2-H30/H50-O)

1. Product Overview

(1).Air inlet
(2).Front door
(3).Indicator
(4).SCADA protective doors (touchscreen pen is inside)
(5).EPO
(6).Front door lock
(7).Bottom panel
(8).PCS installation location
(9).Cable protection channel
(10).Air conditioning drain pipe（installed inside the cabinet）
(11).Cable inlet
(12).Air outlet
(13).Grounding

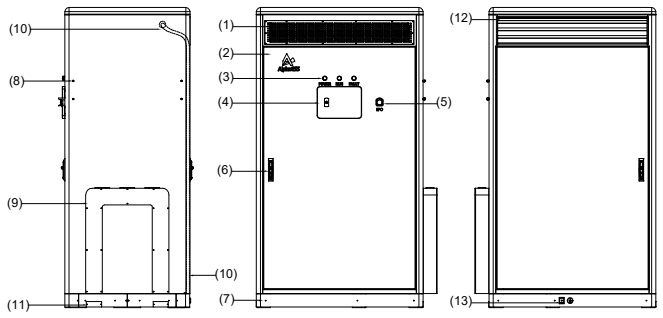

1.1 Packing List

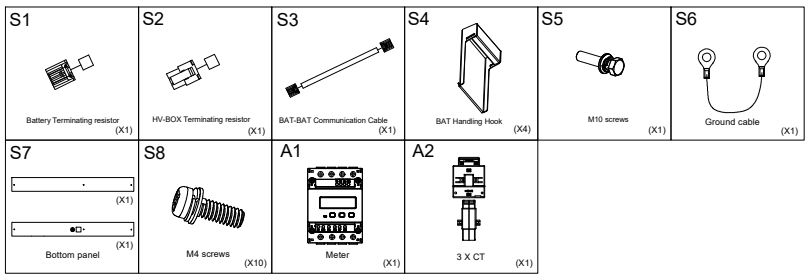

2. Installation Tools

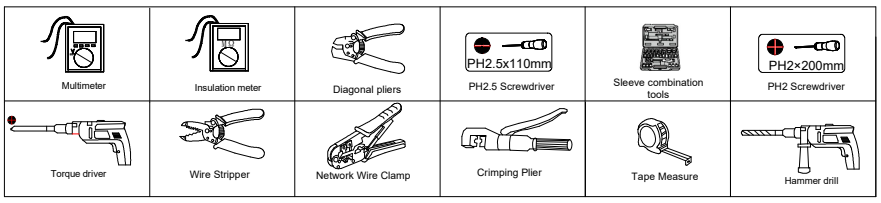

3. M38210-SC &M7790-S Product Overview

(1).Battery sample cable outlet x2
(2).Mounting hole x4
(3).BLMU
(4).Handle x2
(5).Fan x2
(6).Power plug-in x2
(7).BLMU Communication port 1
(8).BLMU Communication port 2
(9).BAT handling hook connection point x4

Note：The battery appearance of M38210-SC and M7790-S are similar

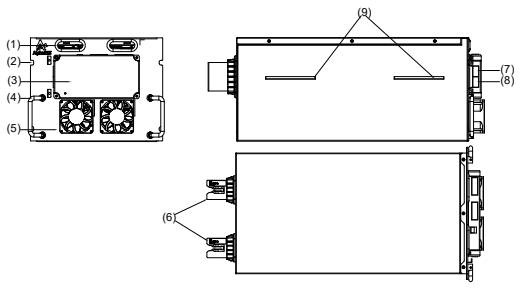

3.1 Packing List

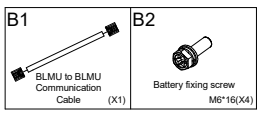

4. PCS

(1).Display and LED panel
(2).Hanger
(3).DC switch
(4).PV input terminal
(5).Battery input terminal
(6).COM1 port
(7).COM2 port
(8).COM3 port(reserve)
(9).On-grid output terminal
(10).Back-up output terminal

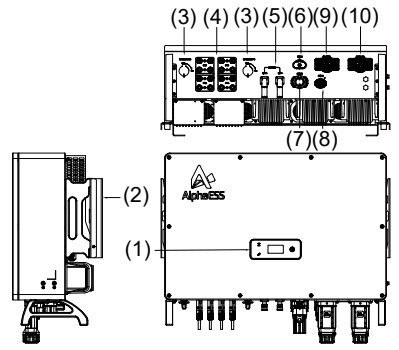

4.1 Packing List

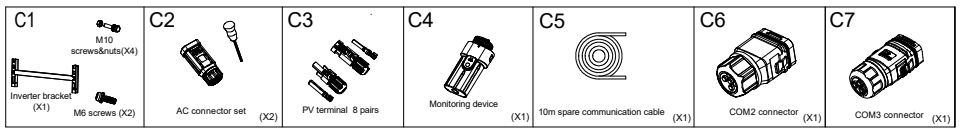

5. Installing the Product

5.1 Installation of grounding cable and negative pole connection

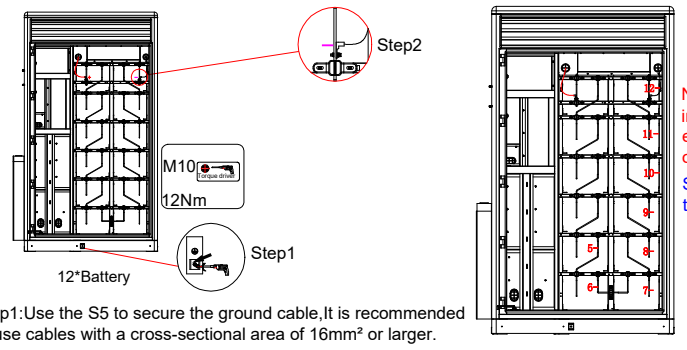

Step1:Use the S5 to secure the ground cable,It is recommended to use cables with a cross-sectional area of 16mm² or larger.
Step2:Install the negative cable to the designated position based on the number of batteries.

Note:The figure shows the installation layout of the negative electrodes for different quantities of batteries.

Suggestion:It is recommended that 2 to 3 people install it.

5.2 Battery installation

Install the batteries in various positions. After you have installed them, secure the batteries on the battery rack using B2 screws.

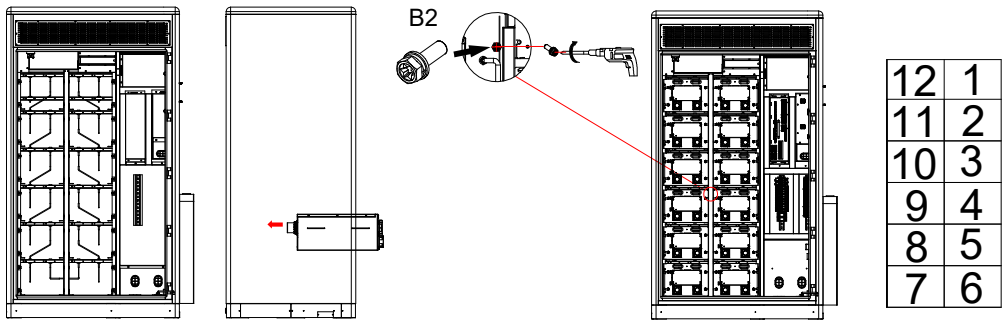

Step3:Battery installation

5.3 Battery communication connection

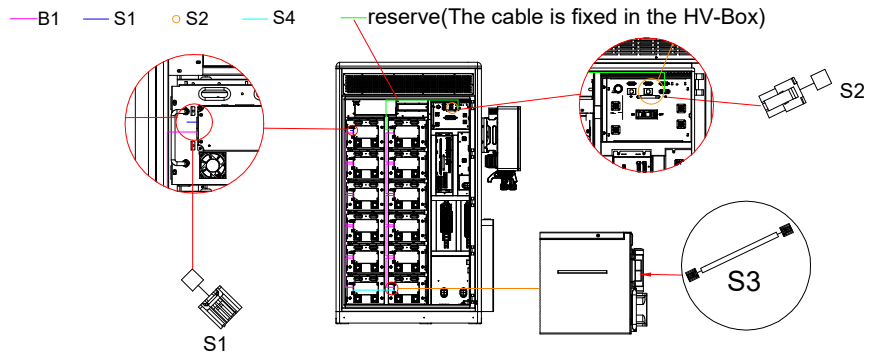

Step4:Battery communication cable

5.4 AC auxiliary source connoction

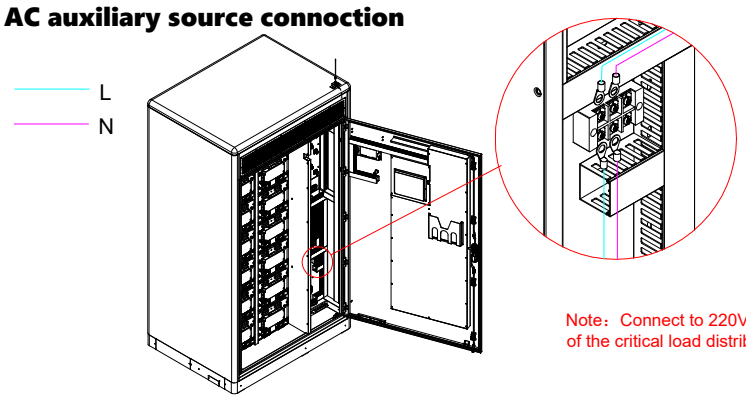

Note：Connect to 220V/230V AC power supply of the critical load distribution cabinet.

Step5:Connect AC auxiliary power cable

5.5 Fix the PCS&Grounding Terminal Connection

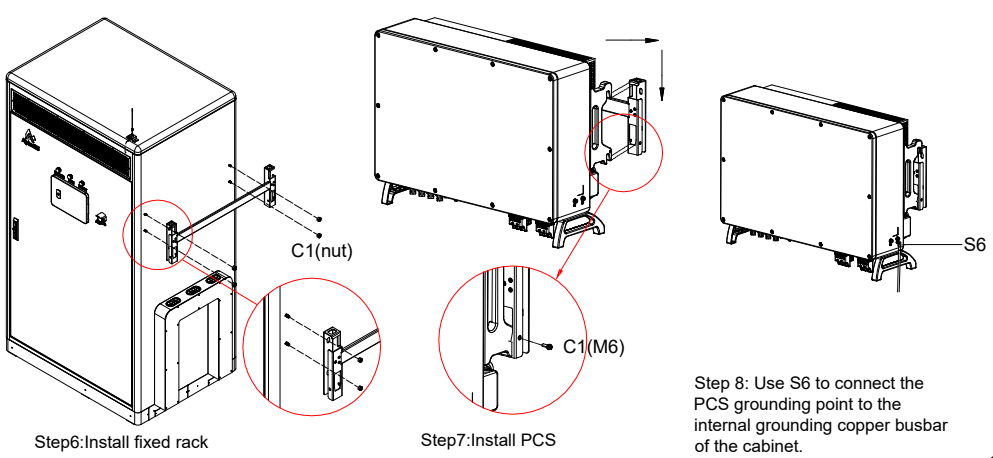

Step6:Install fixed rack

Step7:Install PCS

Step 8: Use S6 to connect the PCS grounding point to the internal grounding copper busbar of the cabinet.

5.6 DC side power cable connection

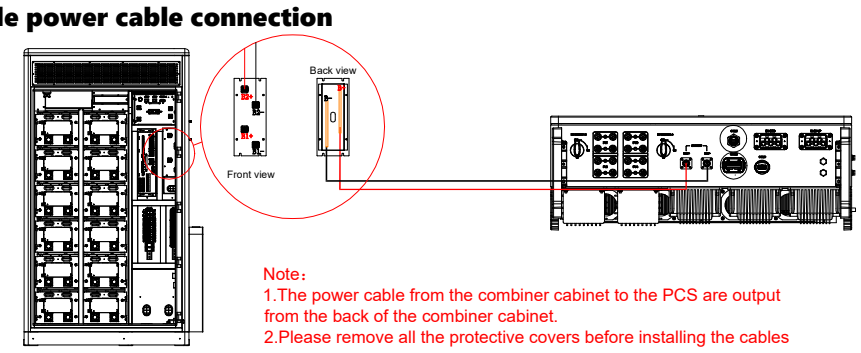

Note：
1.The power cable from the combiner cabinet to the PCS are output from the back of the combiner cabinet.
2.Please remove all the protective covers before installing the cables

5.7 PCS communication cable connection

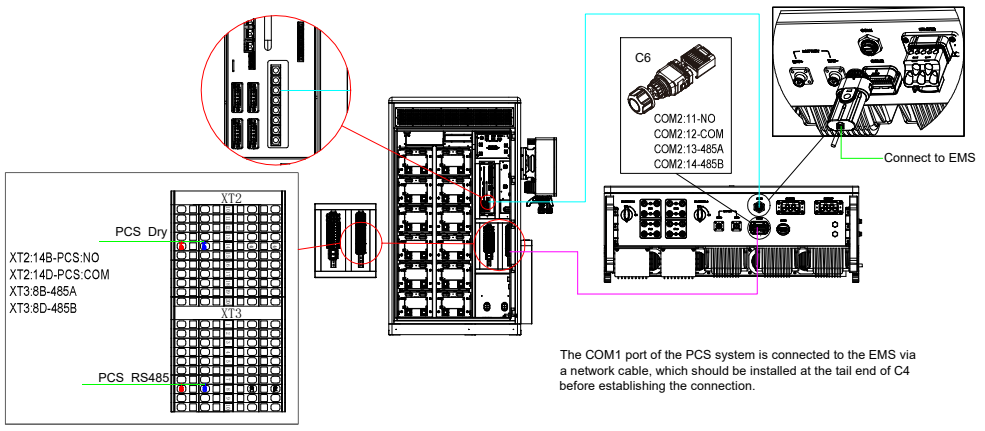

The COM1 port of the PCS system is connected to the EMS via a network cable, which should be installed at the tail end of C4 before establishing the connection.

5.8 Grid Meter connection

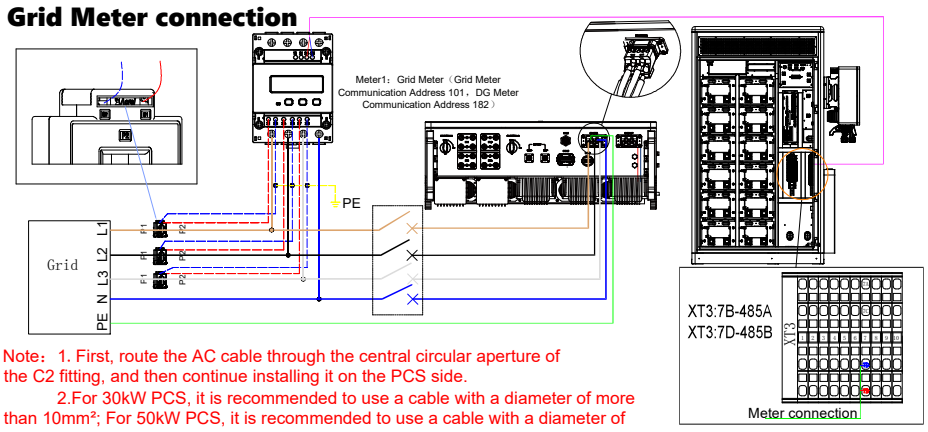

Note：1. First, route the AC cable through the central circular aperture of the C2 fitting, and then continue installing it on the PCS side.
2.For 30kW PCS, it is recommended to use a cable with a diameter of more than 10mm²; For 50kW PCS, it is recommended to use a cable with a diameter of more than 25mm².

Suggestion: Install a circuit breaker between grid and the PCS;note that the Alpha do not provide the circuit breaker ,If a circuit breaker is installed,a leakage protector is not needed between the power grid and the PCS.

5.9 Load side connection

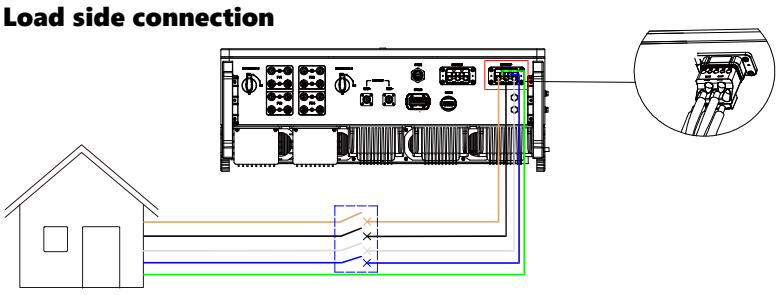

Note：First, route the AC cable through the central circular aperture of the C2 fitting, and then continue installing it on the PCS side.

Suggestion: Install a circuit breaker between load and the PCS;
note that the Alpha do not provide the circuit breaker ,If a circuit breaker is installed, a leakage protector is not needed between the power load and the PCS.

5.10 Cable Routing Diagram and Bottom panel installation

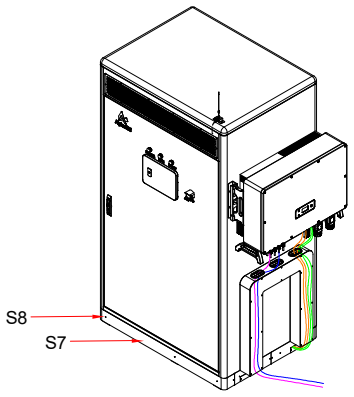

—TO GRID —TO LOAD
— PCS-LAN/PCS-485
— BAT+/BAT-

1.Please route the cable connected to the PCS through the cable protection channel.
2.Use S7 and S8 to secure all the bottom panel under the system cabinet.

5.11 Dual power system AC side conncection(Dual Power system)

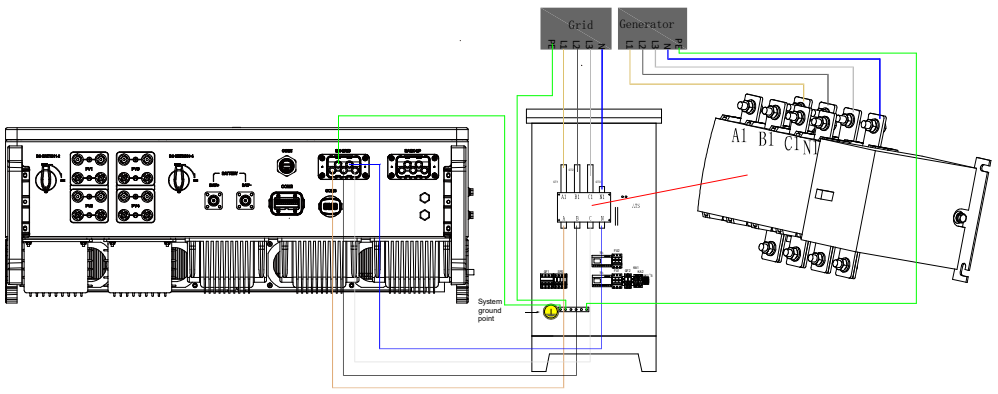

5.12 ATS dry contact connection(Dual Power system)

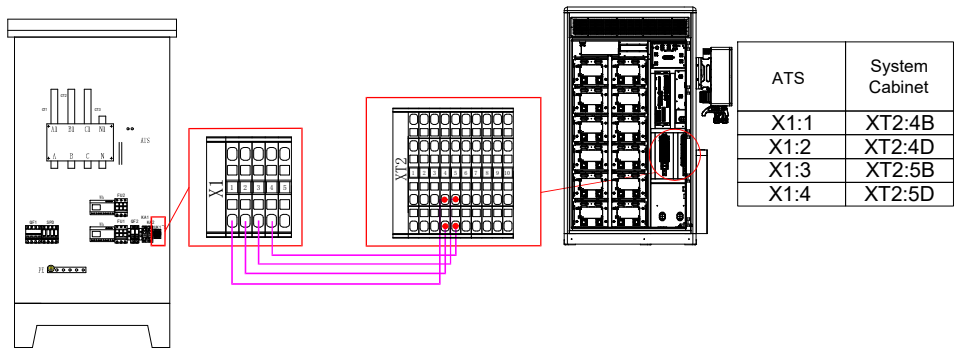

ATS	System Cabinet
X1:1	XT2:4B
X1:2	XT2:4D
X1:3	XT2:5B
X1:4	XT2:5D

5.13 Diesel generator dry contact connection(Off-Grid with DG)

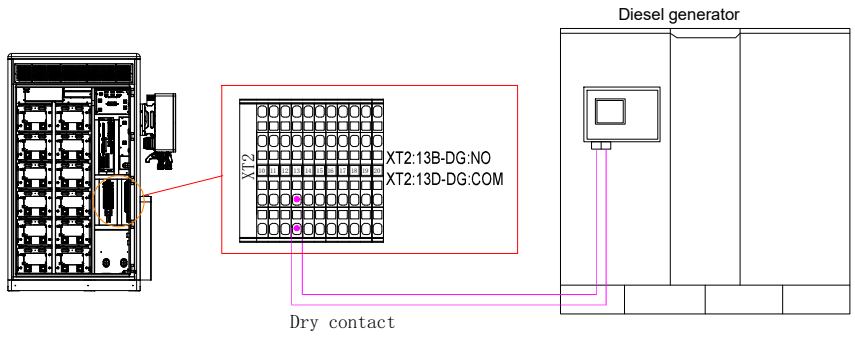

5.14 Parallel cable connection(On-Grid)

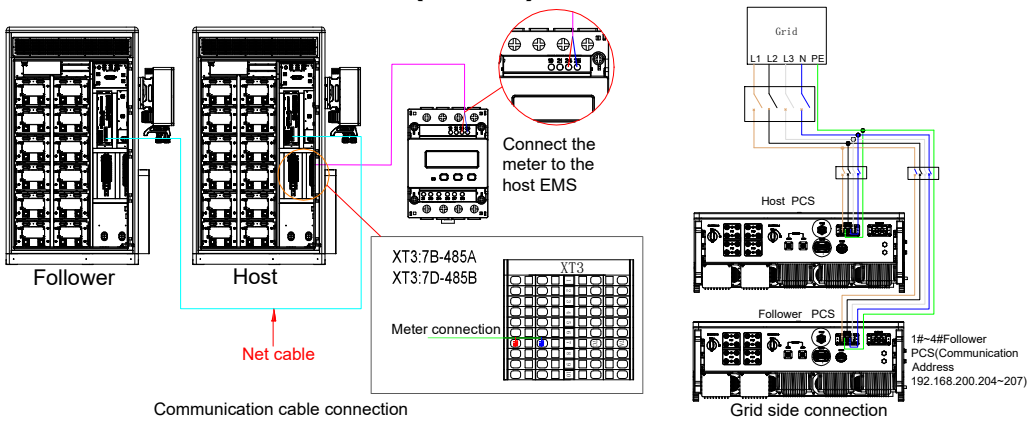

Note：For the remaining cables, refer to the stand-alone system

5.15 External cable connetion

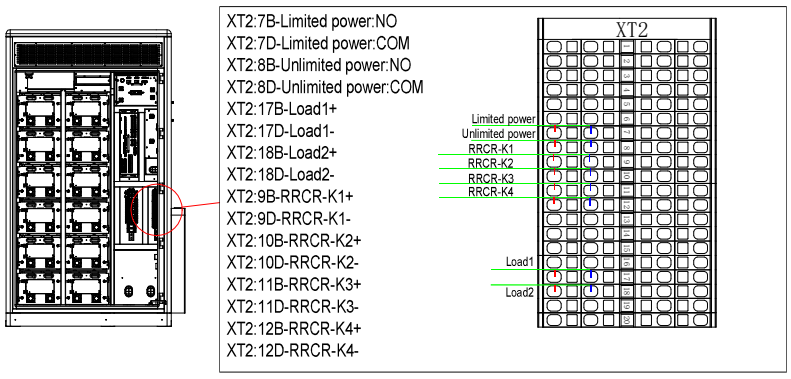

6.2 Power off the system

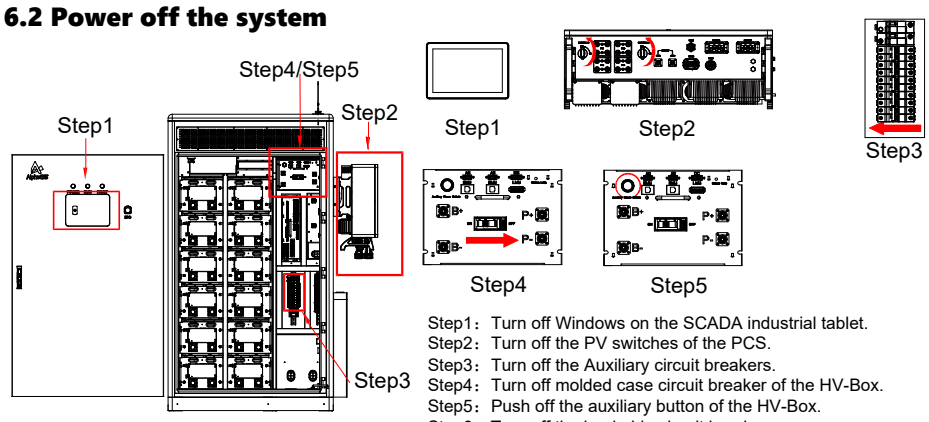

Step1：Turn off Windows on the SCADA industrial tablet.
Step2：Turn off the PV switches of the PCS.
Step3：Turn off the Auxiliary circuit breakers.
Step4：Turn off molded case circuit breaker of the HV-Box.
Step5：Push off the auxiliary button of the HV-Box.
Step6：Turn off the load-side circuit breaker.
Step7：Turn off the grid side circuit breaker .

6. Commissioning

6.1 Power on the system

Note:Before powering on,ensure that the switch on the back of the SCADA screen is turned on and that all other switches are turnde off.

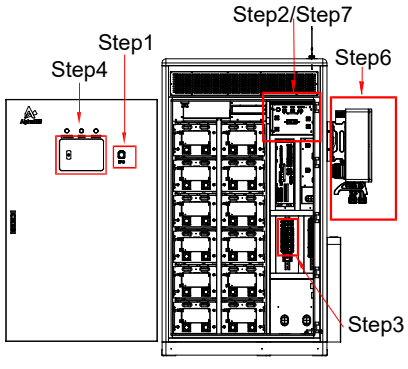

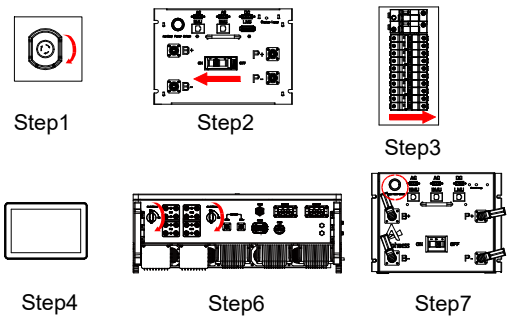

Step1：Rotate the EPO button to reset it .
Step2：Turn on the molded case circuit breaker of the HV-Box.
Step3：Turn on the Auxiliary circuit breakers.
Step4：Follow the SCADA interface guide to perform operations on the screen.
Step5：Wait for about 3 minute, then check to ensure that the battery has no errors before proceeding to step 6.（On the SCADA screen, observe whether the HV-Box relay is closed.）
Step6：Turn on the PV switches of the PCS.
Step7：Press once the auxiliary button of the HV-Box.
Step8：After ensuring that all systems are functioning properly, first turn on the grid-side circuit breaker, and then turn on the load-side circuit breaker

7. For more information, please download System User Manual and System Installation Manual

System Installation Manual

System User Manual

Alpha C&I Cloud