Alphaess
your smart energy

V04

INSTALLATION, OPERATION & MAINTENANCE MANUAL OF SMILE - G3 - S5



DISCLAIMER

Copyright © Alpha ESS Co., Ltd. 2023. All rights reserved.

No part of this document may be reproduced or transmitted in any form or by any means without prior written consent of Alpha ESS Co., Ltd.

The material furnished in this document is believed to be accurate and reliable. The information and recommendations in this document do not constitute commitments or warranties in the form of assignments. The information in this document is subject to change without notice. You may refer to the AlphaCloud Platform (https://cloud.alphaess.com) for the most updated version.

All company and brand products and service names are trademarks or registered trademarks of their respective holders.

COPYRIGHT STATEMENT

This manual is under the copyright of Alpha ESS Co., Ltd. with all rights reserved. Please retain this manual and operate the Product in accordance with all safety and operating instructions in this manual. Please do not operate the product before reading through the manual.

CONTENT

DISCLAIMER 1

COPYRIGHT STATEMENT 2

CONTENT 3

1. Introduction 8

1.1. Content and Structure of this Document 8

1.2. Target Group 8

1.3. Levels of Warning Messages 9

1.4. Definition of Abbreviations and Nouns 10

2. Safety 11

2.1. Intended Use 11

2.2. Battery Safety Instructions 12

2.2.1. General Safety Precautions 12

2.2.2. Response to Emergency Situations 12

2.3. Important Safety Instructions 13

2.4. Symbols Explanation 17

3. Product Introduction and Application Scenarios 20

3.1. Naming Convention 20

3.2. System Introduction 21

3.3. Product Description 22

3.3.1. Inverter Electrical Interface & Connections Introduction 22

3.3.2. Inverter Display Interface Introduction 23

3.3.3. Battery Display Interface Introduction 24

3.3.4. Battery Introduction of SMILE-G3-BAT-10.1P 25

3.3.5. Battery Introduction of SMILE-G3-BAT-8.2P 26

3.3.6. Battery Introduction of SMILE-G3-BAT-3.6S/4.0S 27

3.3.7. Battery Introduction of SMILE-G3-BAT-3.8S 28
3.4. Application Scenarios 29
3.4.1. DC-Coupled Storage System 29
3.4.2. AC-Coupled Storage System 29
3.4.3. Hybrid-Coupled Storage System 30
3.4.4. Off-Grid Storage System 30
4. Storage and Transport 31
4.1. Storage 31
4.1.1. Inverter Storage 31
4.1.2. Battery Storage 31
4.2. Transport 32
5. Mounting 33
5.1. Check the Outer Packing 33
5.2. Scope of Delivery 33
5.3. Requirements for Mounting 38
5.3.1. Basic Requirements 38
5.3.2. Mounting Environment Requirements 38
5.3.3. Mounting Structure Requirements 39
5.3.4. Mounting Angle and Stack Requirements 39
5.3.5. Mounting Space Requirements 40
5.4. Prepare Tools and Instruments 42
5.5. Mount the System 43
5.5.1. Mount the Parallel Battery SMILE-G3-BAT-8.2P 43
5.5.2. Mount the Parallel Battery SMILE-G3-BAT-10.1P 45
5.5.3. Mount the Series Batteries 47
5.5.4. Mount the Inverter 56
5.5.5. Mount the Wi-Fi Module 56
6. Electrical Connection 57
6.1. Cable Requirements for Connection 58
6.2. Grounding Connection 59

6.3. AC Connection 60
6.3.1. Requirements for the AC Connection 60
6.3.2. Select Suitable AC Circuit Breaker 61
6.3.3. Grid and Backup Connection 62
6.3.4. CT Connection & Meter Connection 65
6.4. PV Connection 72
6.5. Electrical Connection between the Inverter and Battery 74
6.5.1. Communication Connection between the INV and BAT 74
6.5.2. System Connection between INV and BAT 75
6.6. Communication Connection with Inverter 82
6.7. Mount Covers of the Battery and Inverter 85
7. Installer Account Registration and Install a New System 88
7.1. Register on AlphaESS App 88
7.1.1. Download and Install the AlphaESS App 88
7.1.2. Register an Installer Account 88
7.1.3. Overview of Functions for Installer Account 89
7.1.4. Register a New System – “Install New System” 90
7.2. Register on AlphaCloud 92
7.2.1. Register an Installer Account 92
7.2.2. Install New System 94
8. Power On and Off the System 95
8.1. Power on the System 95
8.2. Power off the System 96
9. Commissioning 97
9.1. Check before Power-On 97
9.2. Actions before Commissoning 98
9.3. Wi-Fi Module Configuration and Parameters Settings 99
9.3.1. Wi-Fi Configuration 99
9.3.2. Direct Commissioning on Wi-Fi Configuration 104

9.4. Install a New System and Set on the App 107

9.4.1. Download and Install the App 107

9.4.2. Register as an Installer 107

9.4.3. Install a New System 108

9.5. Check the Running State Online 109

9.5.1. Check the Charge Function 109

9.5.2. Check the PV Generation and Discharge Function 111

9.5.3. Check the UPS State 112

9.6. Instruct the End User to Install the App 112

10. Maintenance and Troubleshooting 113

10.1. Routine Maintenance 113

10.2. Troubleshooting 114

10.2.1. Common Errors 114

10.2.2. Battery Protection Description for Parallel Battery 123

10.2.3. Battery Protection Description for Series Battery 124

10.2.4. Battery Error Description 125

11. System Removal & Return 126

11.1. Remove the Product 126

11.2. Pack the Product 126

11.3. Dispose of the Product 126

12. Technical Data 127

12.1. Datasheet of Inverter SMILE-G3 Single Phase Inverter 127

12.2. Datasheet of Battery 130

12.2.1. Datasheet of Battery SMILE-G3-BAT-8.2P 130

12.2.2. Datasheet of Battery SMILE-G3-BAT-10.1P 131

12.2.3. Datasheet of Battery SMILE-G3-BAT-3.6S 132

12.2.4. Datasheet of Battery SMILE-G3-BAT-3.8S 133

12.2.5. Datasheet of Battery SMILE-G3-BAT-4.0S 134

Appendix 1: System Wiring Diagrams 135

Appendix 2: Regional Application Standard 142

1. Introduction

1.1. Content and Structure of this Document

This document is valid for the SMILE-G3 single phase energy storage system which includes inverter SMILE-G3-S5/S3.6/B5-INV and battery SMILE-G3-BAT-8.2P/10.1P, and SMILE-G3-BAT-3.6S/3.8S/4.0S.
SMILE-G3-BAT-3.6S is only for Greece market.

This document describes the mounting, installation, commissioning, configuration, operation, troubleshooting and decommissioning of the energy storage system as well as the operation of the user interface.

Please read all documentation that accompanies the product. Keep these documents in a convenient place and available at all times.

Illustrations in this document are reduced to the essential information and may deviate from the real product.

1.2. Target Group

This document is intended for qualified persons. Only qualified persons are allowed to perform the operations marked with a warning symbol in this document.

Qualified persons must have:

- Knowledge of working principle of inverters.
- Knowledge of how to deal with the dangers and risks associated with installing and using electrical devices, batteries and energy storage system.
- Knowledge of the installation and commissioning of electrical devices and energy storage system.
- Knowledge of the applicable standards and directives relevant to the product and its installation.
- Understood and complied with this document, including all safety precautions.

Understood and complied with the documents of the battery manufacturer and inverter manufacturer, including all safety precautions.

1.3. Levels of Warning Messages

The following levels of warning messages may occur when handling the product.

 DANGER indicates a hazardous situation that will result in serious injury or even death if not avoided.
 WARNING indicates a hazardous situation that could result in serious injury or even death if not avoided.
 CAUTION indicates a hazardous situation that could result in minor or moderate injury if not avoided.
 NOTICE indicates a situation that could result in property damage if not avoided.
INFORMATION provides tips which are valuable for the optimal installation and operation of the product.

1.4. Definition of Abbreviations and Nouns

A

AC	alternating current
App	application
AUX	auxiliary

B

BAT	battery
BMS	battery management system

D

DC	direct current

E

EMS	energy management system

I

INV	inverter

P

PV	photovoltaic

2. Safety

2.1. Intended Use

The inverter, batteries and electricity meters together form a system designed to optimise the self-consumption of electrical energy in a household. The inverter transfers energy between AC current and DC current while the battery is used for the storage of energy (typically storing surplus energy produced by solar arrays).

SMILE-G3-S5/S3.6/B5-INV, SMILE-G3-BAT-10.1P and SMILE-G3-BAT-3.6S/4.0S are suitable for indoor and outdoor installation.

SMILE-G3-BAT-8.2P and SMILE-G3-BAT-3.8S are only suitable for indoor installation.

The SMILE-G3-S5/S3.6-INV must only be operated with PV arrays of protection class II in accordance with IEC 61730, application class A. The PV modules must be compatible with this product.

PV modules with a high capacity to ground must only be used if their coupling capacity does not exceed 1.0 µF.

All components must be used in a manner and environment in compliance with the requirements of this manual and in compliance with all relevant local Standards and directives. Any other operation may cause personal injury or property damage.

Alterations to the product, e.g. changes or modifications, are only permitted with the express written permission of AlphaESS. Unauthorized alterations will void the product warranty(s). AlphaESS shall not be held liable for any damage caused by such changes.

Any use of the product other than that described in the Intended Use section does not qualify as appropriate.

The enclosed documentation is an integral part of this product. Keep the documentation in a convenient place for future reference and comply with all instructions contained therein.

The type label must remain permanently attached to the product.

2.2. Battery Safety Instructions

2.2.1. General Safety Precautions

- Before installing any part of the SMILE G3, please read the Installation Manual completely. If additional hardware is being installed at the same time as the SMILE G3 unit (e.g. a Backup device or a separate AC-coupled PV system), please read the Installation Manual for each component/system before commencing installation of any hardware. The installation of one piece of hardware may create hazards for the installation of another piece of hardware – be sure to read all Manuals to understand the interaction and safety implications of the combined systems.
- Overvoltage or incorrect wiring can damage the battery and cause deflagration, which can be extremely dangerous.
- All types of battery breakdown may lead to electrolyte or flammable gas leakage.
- The battery is not user-serviceable because there is high voltage in the device.
- Read the label with Warning Symbols and Precautions on the right side of the battery.
- Do not connect any AC conductors or PV conductors directly to the battery which should be connected only to the inverter.
- Do not charge or discharge a damaged battery.
- Do not damage the battery by dropping, deforming, impacting, cutting or penetrating it with a sharp object. Battery damage may cause a leakage of electrolyte or fire.
- Do not expose the battery to an open flame.

2.2.2. Response to Emergency Situations

The battery is designed to prevent the danger caused by malfunction.

- In the case of user exposure to the electrolyte or other internal materials of the battery cells, the list below details recommended actions dependent on the type of exposure:

1. Inhalation: Leave the contaminated area immediately and seek medical attention.
2. Eye injuries: Rinse eyes with running water for 15 minutes and seek medical attention.
3. Skin injuries: Wash the affected area thoroughly with soap and seek medical attention.
4. Ingestion: Induce vomiting and seek medical attention.

If a fire breaks out in the place where the battery is installed, perform the following countermeasures:

- Fire extinguishing media

1. Respirator is not required during normal operations.
2. Use FM-200 or CO_2 extinguisher for battery fire.

3. Use an ABC fire extinguisher if the fire is not from battery and hasn't spread to it yet.

- Firefighting instructions

1. If fire occurs when charging the battery, disconnect the battery circuit breaker to shut off the power to charge if it is safe to do so.
2. If the battery is not on fire yet, extinguish the fire before the battery catches fire.
3. If the battery is on fire, do not try to extinguish it but evacuate people immediately.

WARNING

There may be a possible explosion when batteries are heated above 150°C.
When the battery is burning, it leaks poisonous gases. Do not approach.

- Effective ways to deal with accidents

1. On land: Place damaged battery in a segregated place and call local fire department or technical service engineer.
2. In water: Stay out of the water and don't touch anything if any part of the battery, inverter, or wiring is submerged.
3. Do not use submerged battery again and contact an AlphaESS-Accredited or Battery-Accredited technical service engineer.

2.3. Important Safety Instructions

DANGER

Danger to life due to electric shock when live components or DC cables are touched.

The DC cables connected to a battery or a PV module may be live. Touching live DC cables can result in serious injury or even death due to electric shock. To avoid this danger:

- Disconnect the inverter and battery from voltage sources and make sure it cannot be reconnected before working on the device.
- Do not touch non-insulated parts or cables.
- Do not disconnect the DC connectors under load.
- Wear suitable personal protective equipment for all work on the product.
- Observe all safety information of this document.

DANGER

Danger to life due to electric shock if live system components in backup mode are touched

Even if the grid circuit breaker and the PV switch of the inverter are disconnected, parts of the system may still be live when the battery is switched on due to backup mode. To avoid this danger:

• Before performing any work on the inverter, disconnect it from all voltage sources as described in this document.

DANGER

Danger to life due to electric shock if touching live components or DC cables when working on the battery

The DC cables connected to the battery may be live. Touching live DC cables can result in serious injury or even death due to electric shock. To avoid this danger:

• Before performing any work on the battery, disconnect the inverter from all voltage sources as described in this document.

DANGER

Danger to life due to electric shock if touching live components when the inverter or battery cover is open

High voltages are present in the live parts and cables inside the system during operation. Touching live parts and cables can result in significant injuries or even death due to electric shock. To avoid this danger:

• Do not open the system.

DANGER

Danger to life due to electric shock if live components are touched during a ground fault.

When a ground fault occurs, parts of the energy storage system may still be live. Touching live parts and cables can result in significant injuries or even death due to electric shock. To avoid this danger:

- Disconnect the product from voltage sources and make sure it cannot be reconnected before working on the device.
- Touch the cables of the PV array on the insulation only.
- Do not touch any parts of the substructure or frame of the PV array.
- Do not connect PV strings with ground faults to the inverter.

DANGER

Danger to life due to electric shock if an ungrounded PV module or array frame is touched.

Touching ungrounded PV modules or array frames can result in significant injuries or even death due to electric shock. To avoid this danger:

- Connect and ground the frame of the PV modules, the array mounting frame and the electrically conductive surfaces to ensure continuous conduction.
- Observe the applicable local regulations.

DANGER

Danger to life due to dangerous voltages on the battery.

There is dangerous voltage at the terminal of the battery power cable. Reaching into the terminal of the battery power cable can result in a lethal electric shock. To avoid this danger:

- Do not open the battery cover.
- Leave the protective caps on the connectors for the battery's power connection until the inverter cables are connected to the battery.
- Disconnect the system from voltage sources and make sure it cannot be reconnected before working on the inverter or the battery.

WARNING

Risk of chemical burns from electrolyte or toxic gases.

During normal operation, no electrolyte would leak from the battery and no toxic gases would form. Despite careful construction, if the battery is damaged or a fault occurs, it is possible that electrolyte may leak or toxic gases may form. To avoid this danger:

- Store the battery in a cool and dry place.
- Do not drop the battery or expose it to sharp objects.
- Protect the battery from mechanical damage from vehicles, tools and other objects.
- Only set the battery down on its back or its base.
- Do not open the battery.
- Do not install or operate the battery in a potentially explosive atmosphere or areas of high humidity.
- If moisture has penetrated the battery (e.g. due to a damaged housing), do not install or operate the battery.
- In case of contact with electrolyte, rinse the affected areas immediately with water and seek medical attention without delay.

WARNING

Danger to life due to burns caused by electric arcs through short-circuit currents.

Short-circuit currents in the battery can cause heat build-up and electric arcs. Heat build-up and electric arcs may result in lethal injuries due to burns. To avoid this danger:

- Disconnect the battery from all voltage sources before performing any work on it.
- Observe all safety information of this document.

CAUTION

Risk of burns from the inverter's hot surface.

The surface of the inverter can get extremely hot during operation, and touching it can result in burns. To avoid this danger:

- Correctly mount the inverter so that it cannot be inadvertently touched.
- Do not touch hot surfaces.
- Wait for 30 minutes for surfaces to cool down after switching the system off.
- Observe the safety messages on the inverter.
- During operation, don't touch any parts other than the display panel of the inverter.

CAUTION

Risk of injury due to weight of the inverter and battery.

Injuries may be caused if the product is lifted incorrectly or dropped while being transported or mounted. To avoid this danger:

- Transport and lift the product carefully. Take the weight of the product into account. Use lifting and conveyance aids such as lifting trolleys wherever possible.
- Wear suitable personal protective equipment for all work on the product.

NOTICE

Damage to the inverter and battery due to electrostatic discharge.

Touching electronic components can result in electrostatic discharge, which can damage or destroy the inverter and battery. To avoid this:

- Ground yourself before touching any component.

NOTICE

Damage due to cleaning agents or inappropriate cleaning methods

The use of cleaning agents may cause damage to the product and its components. To avoid this:

- Clean the product and all its components only with a cloth moistened with clear water.
- Never clean the unit with a hose or with the use of a water jet.

2.4. Symbols Explanation

Symbols on the type label of the energy storage inverter

Symbol	Explanation
	Beware of a danger zone This symbol indicates that the product must be additionally grounded if additional grounding or equipotential bonding is required at the installation site.
	Beware of electrical voltage The product operates at high voltages.
	Beware of hot surface The inverter can get hot during operation.
	Danger to life due to high voltages in the inverter; observe a waiting time of 5 minutes. High voltages that can cause lethal electric shocks are present in the live components of the inverter. Prior to performing any work on the inverter, disconnect it from all voltage sources as described in this document.
	WEEE designation Do not dispose of the product together with the household waste but in accordance with the disposal regulations for electronic waste applicable at the installation site.
	Observe the documentations Observe all documentations supplied with the product.
	CE marking The product complies with the requirements of the applicable EU directives.
	Certified safety The product is TUV-tested and complies with the requirements of the EU Equipment and Product Safety Act.
	RCM (Regulatory Compliance Mark) The product complies with the requirements of the applicable Australian standards.
	UKCA marking The product complies with the regulations of the applicable laws of England, Wales and Scotland.

Symbols on the type label and warning label of the battery

Symbol	Explanation
	Beware of a danger zone This symbol indicates that the battery must be additionally grounded if additional grounding or equipotential bonding is required at the installation site.
	Beware of electrical voltage The product operates at high voltages.
	Corrosive substances warning The product contains corrosive substances that can cause severe injury if they come into direct contact with the skin.
	Potentially explosive substances warning Improper handling or fire can cause the product to ignite or explode.
	Warning of hazards from batteries This symbol indicates the danger of handling batteries.
	Observe the documentations Observe all documentations supplied with the product.
	Refer to the instruction for operation Observe all documentations supplied with the product.
	Use eye protection Wear eye protection for all work on the device.
	No open flame Handling an open flame and sources of ignition is forbidden in the immediate vicinity of the product.
	Access is prohibited for all children Children must be kept at a safe distance from the product.
	Do not short circuit Touching the short-circuit connection of the battery results in death or lethal injuries due to electric shock and massive energy release.

	WEEE designation Do not dispose of the battery together with the household waste but in accordance with the locally applicable disposal regulations for batteries.
CE	CE marking The product complies with the requirements of the applicable EU directives.
	RCM (Regulatory Compliance Mark) The product complies with the requirements of the applicable Australian standards.
UK CA	UKCA marking The product complies with the regulations of the applicable laws of England, Wales and Scotland.
UN38.3	Marking for transport of dangerous goods The product passes the certifications of the UN38.3.

3. Product Introduction and Application Scenarios

3.1. Naming Convention

SMILE-G3-S5



1 2 3

Location	Name	Explanation
1	SMILE	Residential energy storage system
2	G3	Generation 3 for SMILE series
3		Prefix S = Solar Connections (i.e. Hybrid) Prefix B = Battery Only (i.e. AC-coupled)
	S5	5kW Inverter with Solar Connections – single phase Hybrid energy storage system
	S3.6	3.6kW Inverter with Solar Connections –single phase Hybrid energy storage system
	B5	5kW Battery-Only inverter – single-phase AC-coupled energy storage system

Complete designation	Designation in this document
SMILE-G3-S5-INV, SMILE-G3-S3.6-INV, SMILE-G3-B5-INV	Energy storage inverter
SMILE-G3-BAT-8.2P, SMILE-G3-BAT-10.1P	Parallel batteries
SMILE-G3-BAT-3.6S, SMILE-G3-BAT-3.8S, SMILE-G3-BAT-4.0S	Series batteries
SMILE-G3-S5, SMILE-G3-S3.6, SMILE-G3-B5	System/Energy storage system/BESS

3.2. System Introduction

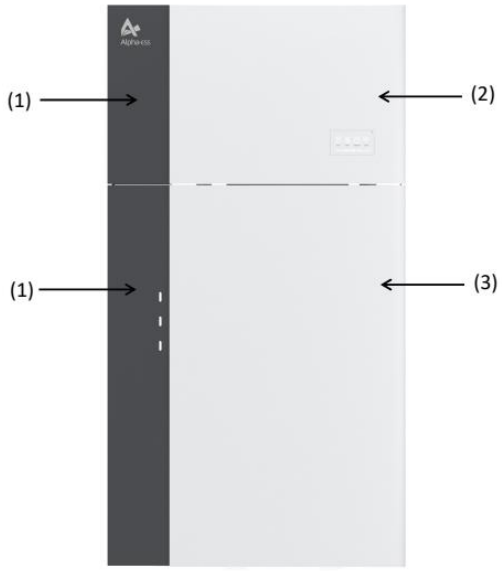

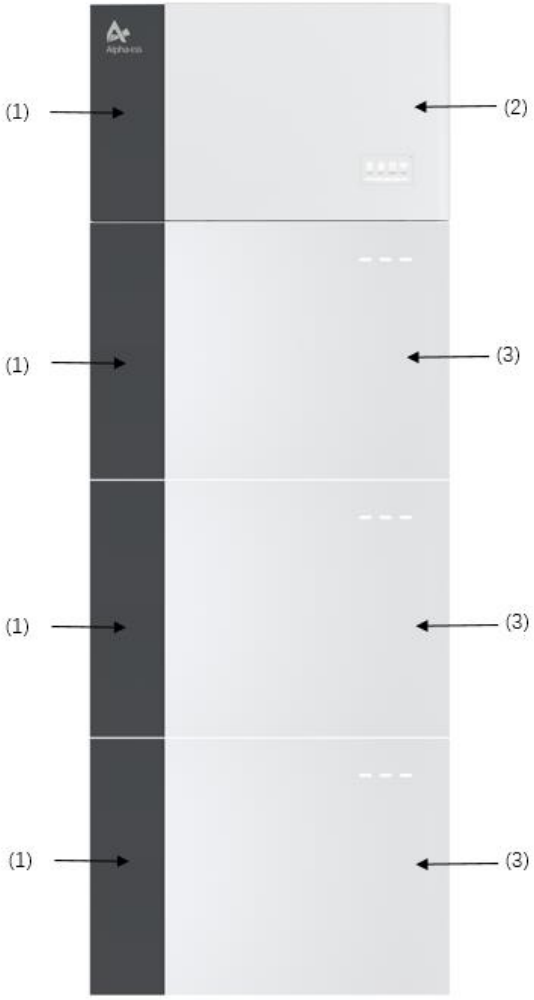

Object	Name	Explanation
1	Cable Cover	Covers for the left wiring area (There are two types of covers, one for the Battery Module(s) wiring and the second for the Inverter connections.)
2	SMILE-G3-S5-INV, SMILE-G3-S3.6-INV, SMILE-G3-B5-INV	Energy storage inverter
3	SMILE-G3-BAT-8.2P SMILE-G3-BAT-10.1P SMILE-G3-BAT-3.6S SMILE-G3-BAT-3.8S SMILE-G3-BAT-4.0S	Battery

3.3. Product Description

3.3.1. Inverter Electrical Interface & Connections Introduction

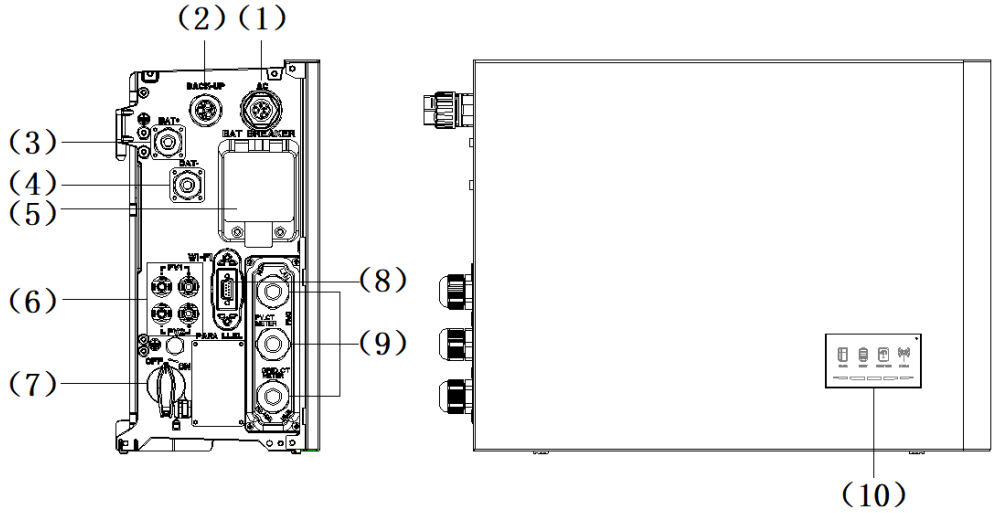

Position	Designation
1	Grid Connector (AC Supply)
2	Backup Connector
3	Battery Positive (+ve) Cable Connector
4	Battery Negative (-ve) Cable Connector
5	Battery Breaker of the Inverter
6	Positive and Negative PV Connectors, PV1/ PV2 *
7	PV Switch*
8	Wi-Fi Port
9	Communication Ports (BMS, RS485, PV-CT, Meter&Grid-CT, DRM**&RRCR, LAN, AUX) (Refer to 6.6)
10	Inverter LED Display

* For product B5, there are no PV switch or PV inputs.

** The DRM is only for regions with AS/NZW 4777.2 safety regulations.

3.3.2. Inverter Display Interface Introduction

LED Display

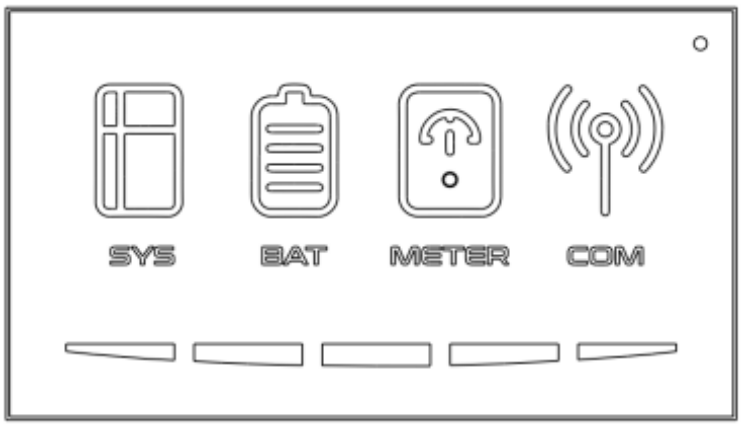

The upper four LED indicators and one reset button are provided on the display panel. These LED indicators provide information about the operation status of the system.

Status	Explanation	Status	Explanation
	**White light** The system works normally		**White light** The battery works normally
	**Red light** The system is in fault		**No light** The battery is in fault
	**White light** Meter communication works normally		**White light** Connected to the server
	**No light** Meter lost		**No light** Disconnected to the server

The lower five LED indicators provide information about the State of Charge (SOC) of the batteries connected to this energy storage system.

LED Indicator	SOC	Description
LEDs show the SOC of batteries		SOC＜5%
		5%≤SOC＜20%
		20%≤SOC＜40%
		40%≤SOC＜60%
		60%≤SOC＜80%
		80%≤SOC≤100%

Note that the LED lights provide an approximation of the State of Charge and should be read as an indication and not as a set value.

3.3.3. Battery Display Interface Introduction

During normal operation of battery, three LED indicators on the front cover provide information about the SOC of the battery with white lights on and off or flashing (0.5s on, 1.5s off).

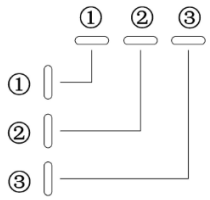

Status	Explanation
	White LED is off.
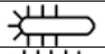	White LED is flashing.
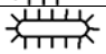	White LED is glowing.

LED Indicator	No.	SOC	Description
LEDs show the SOC status	1	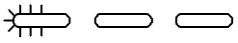	SOC≤10%
	2	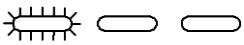	10%＜SOC≤30%
	3	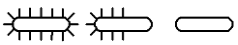	30%＜SOC≤50%
	4	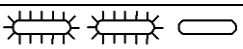	50%＜SOC≤60%
	5	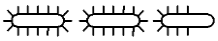	60%＜SOC≤90%
	6	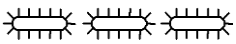	90%＜SOC≤100%

State Display

The LEDs indicate the operating state of the product.

Standby: all white LEDs are flashing (0.5s on and 0.5s off).

Normal: white LEDs are glowing or flashing (0.5s on and 1.5s off).

Protection: yellow LEDs are glowing or flashing (0.5s on and 0.5s off).

Error: yellow LEDs are glowing or flashing (0.5s on and 0.5s off).

Shutdown: all LEDs are off.

3.3.4. Battery Introduction of SMILE-G3-BAT-10.1P

Battery appearance and dimensions

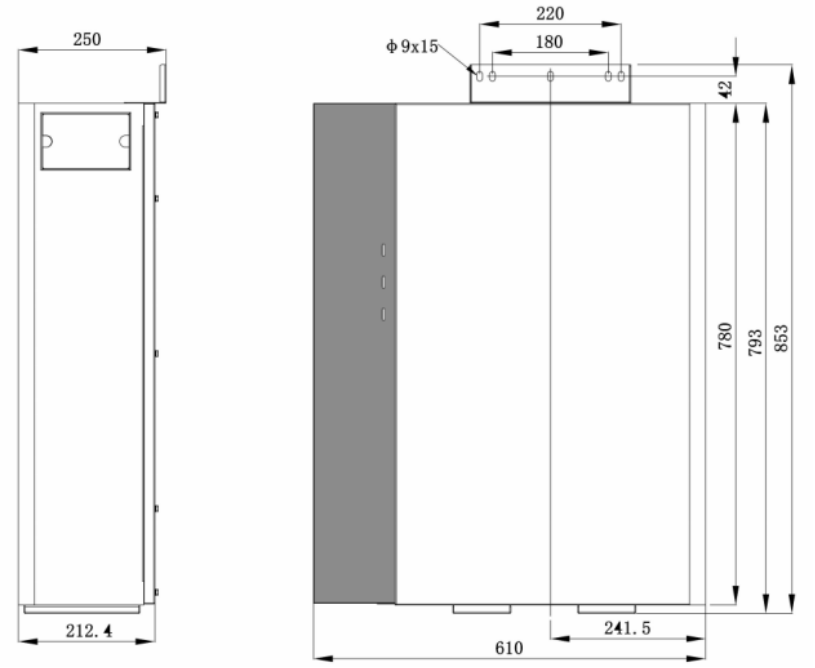

Connection area overview

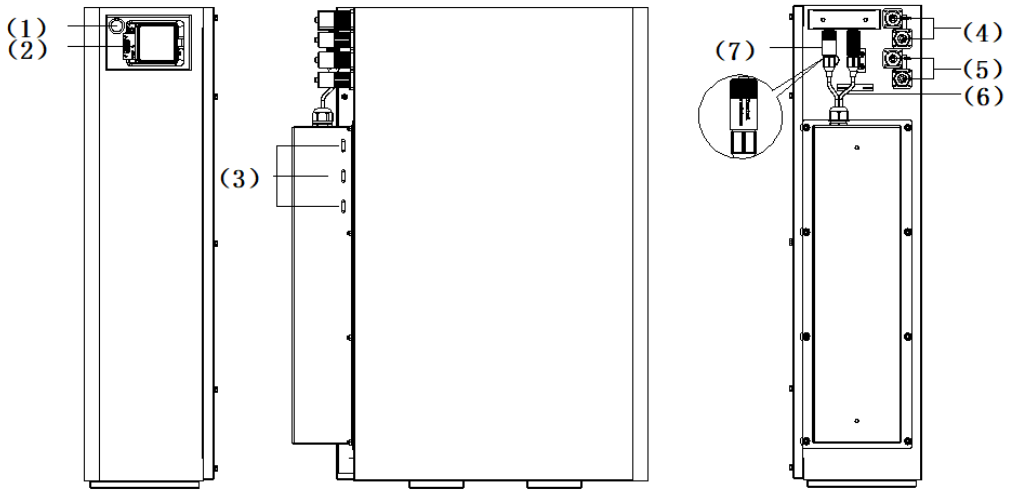

Position	Designation
1	Battery Power Button
2	Battery Breaker
3	Battery LED Display
4	Battery Positive (+ve) Cable Connector
5	Battery Negative (-ve) Cable Connector
6	Grounding Point
7	BMS COM Ports: BMS COM1, BMS COM2 (with Terminal Resistor)

3.3.5. Battery Introduction of SMILE-G3-BAT-8.2P

Battery appearance and dimensions

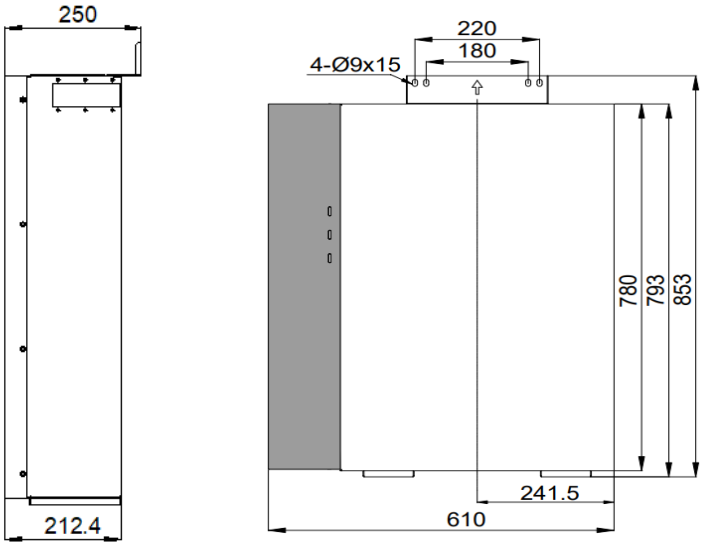

Connection area overview

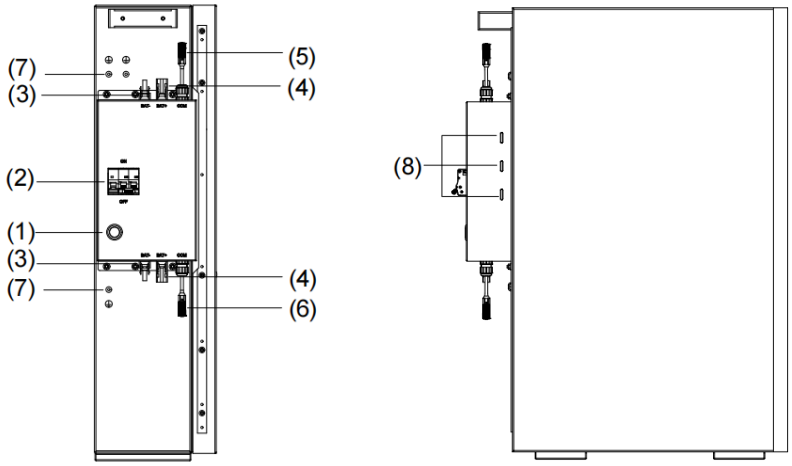

Position	Designation
1	Battery Power Button
2	Battery Breaker
3	Battery Negative (-ve) Cable Connector
4	Battery Positive (+ve) Cable Connector
5	BMS COM1
6	BMS COM2 (with Terminal Resistor)
7	Grounding Point
8	Battery LED Display

3.3.6. Battery Introduction of SMILE-G3-BAT-3.6S/4.0S

Battery appearance and Dimensions

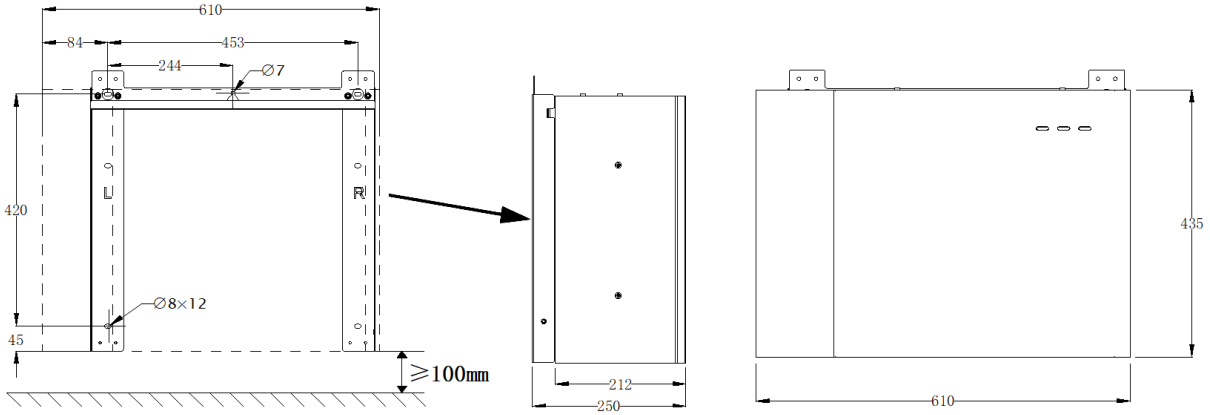

Connection area overview

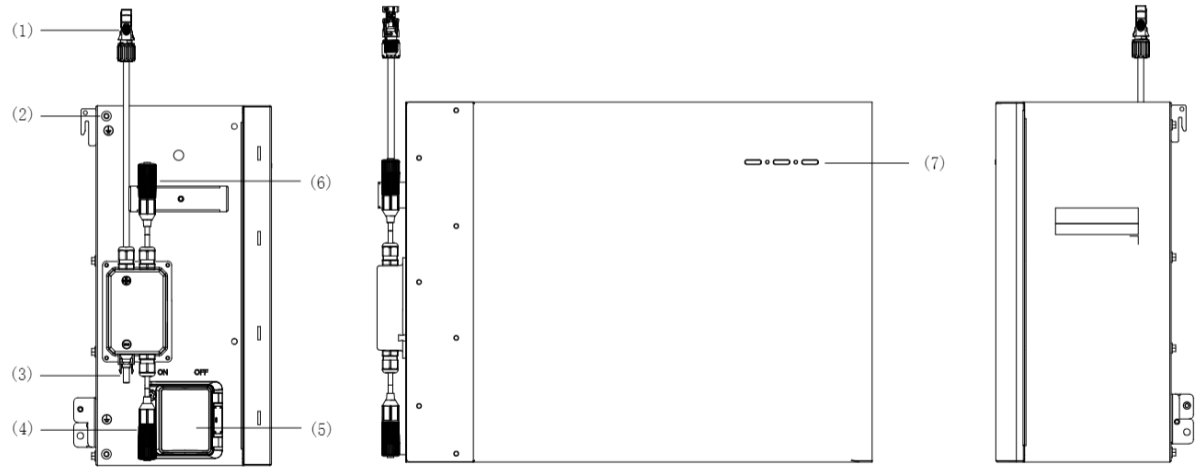

Position	Designation
1	Battery Positive (+ve) Cable Connector
2	Grounding Point
3	Battery Negative (-ve) Cable Connector
4	BMS COM2 (with Terminal Resistor)
5	Battery Circuit Breaker
6	BMS COM1
7	Battery LED Display

3.3.7. Battery Introduction of SMILE-G3-BAT-3.8S

Battery appearance and dimensions

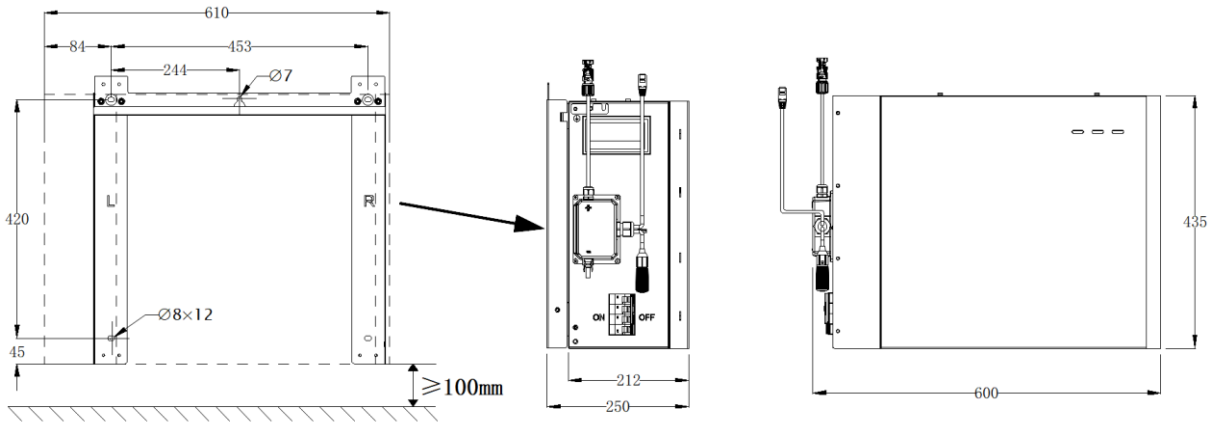

Connection area overview

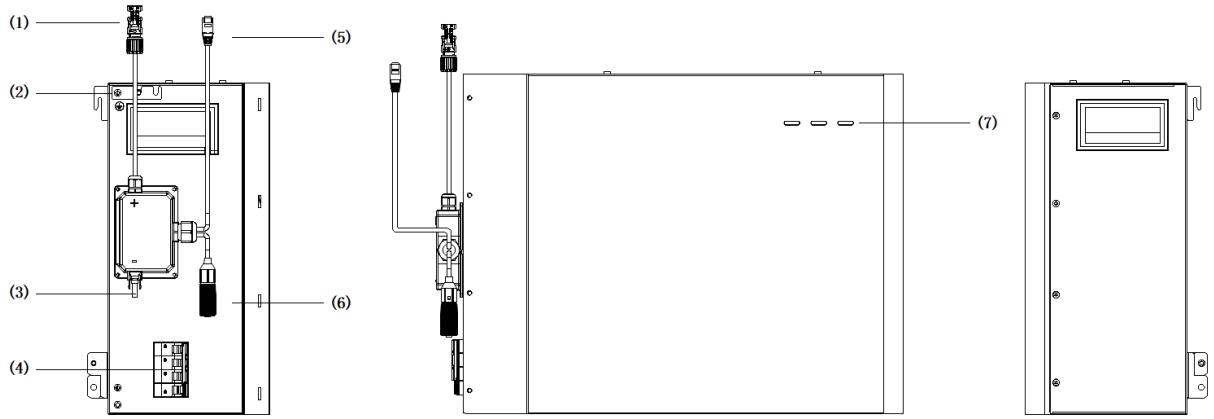

	Designation
1	Battery Positive (+ve) Cable Connector
2	Grounding Point
3	Battery Negative (-ve) Cable Connector
4	Battery Circuit Breaker
5	BMS COM1
6	BMS COM2 (with Terminal Resistor)
7	Battery LED Display

3.4. Application Scenarios

SMILE-G3 single phase system (comprise of the inverter SMILE-G3-S5/S3.6/B5-INV and battery SMILE-G3-BAT-10.1P, SMILE-G3-BAT-8.2P, SMILE-G3-BAT-3.6S/3.8S/4.0S) can be connected as a DC-Coupled systems (mostly new installation), AC-Coupled systems (mostly retrofit), Hybrid-Coupled systems (mostly retrofit, and increase the PV capacity), and Off-Grid (with Generator) systems as shown in the following diagrams:

3.4.1. DC-Coupled Storage System

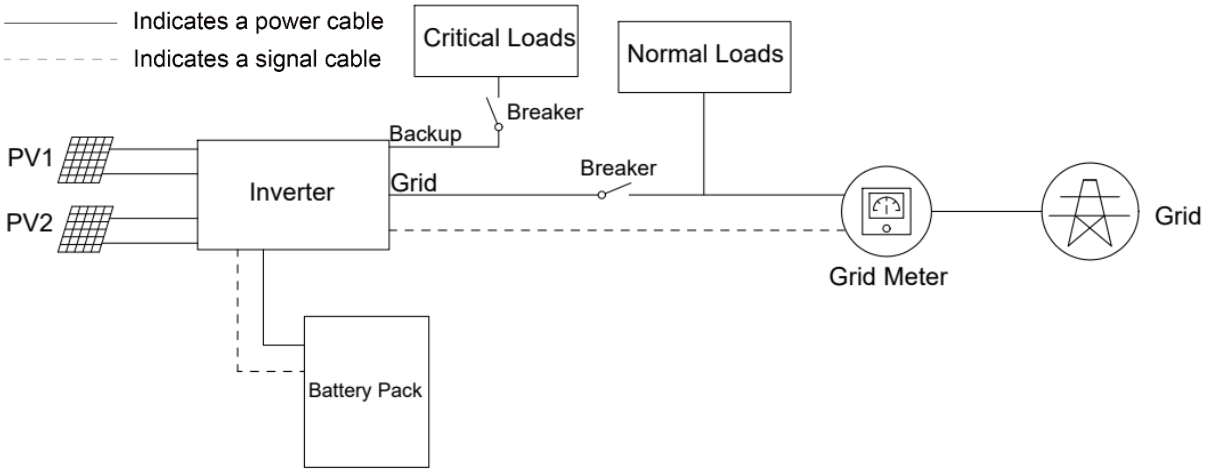

DC-Coupled Storage System – Scheme

3.4.2. AC-Coupled Storage System

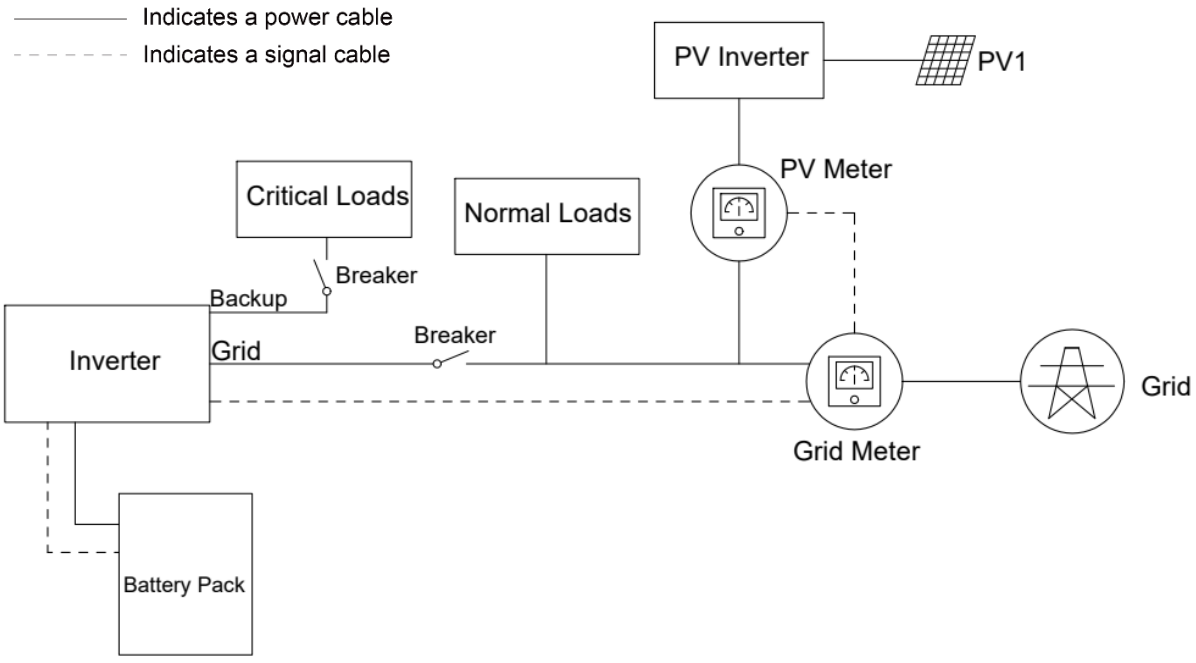

AC-Coupled Storage System – Scheme

3.4.3. Hybrid-Coupled Storage System

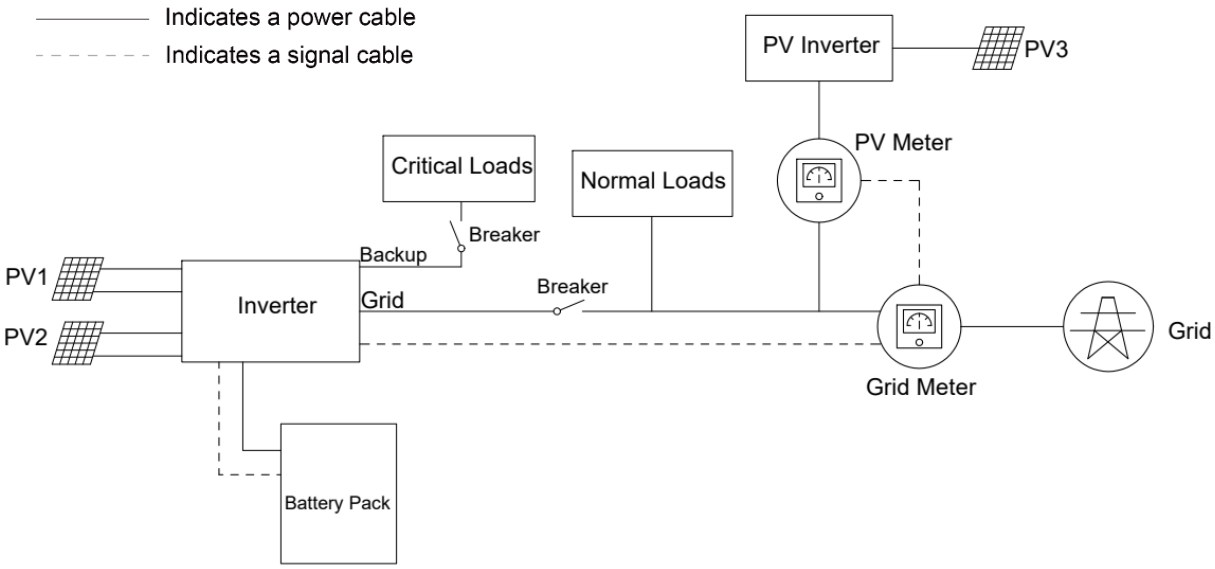

Hybrid-Coupled Storage System – Scheme

3.4.4. Off-Grid Storage System

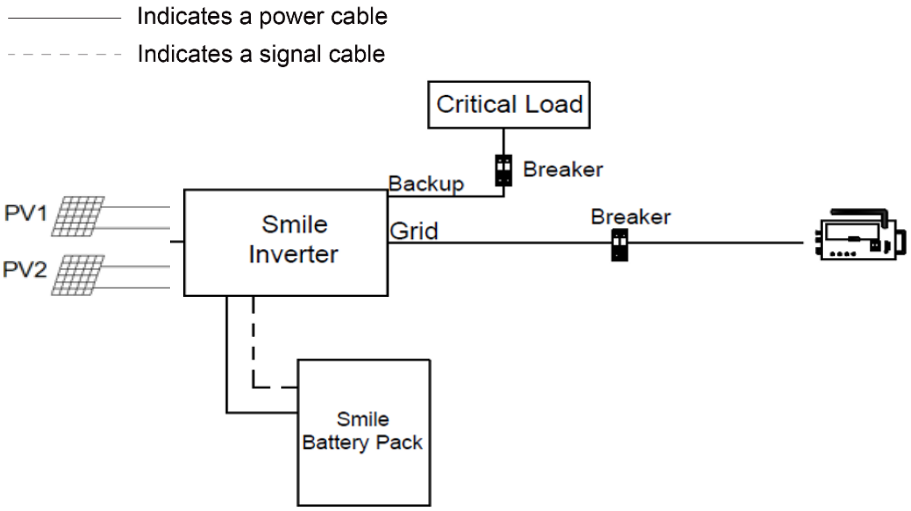

Off-Grid (with Generator) Storage System – Scheme

NOTE

In all cases, Normal Loads and Essential Loads must be appropriately protected by earth fault protection devices (e.g. Type A or Type B RCDs, RCBOs) in accordance with appropriate Standards.
Backup/Essential Loads should not exceed the rated capacity of the inverter, even during on-grid operation.

4. Storage and Transport

4.1. Storage

4.1.1. Inverter Storage

The following requirements should be met if the inverter is not put into immediate use:

1. Do not unpack the inverter.
2. Keep the storage temperature at -40~60°C and the humidity at 5%~95% RH.
3. The inverter should be stored in a clean and dry place and be protected from dust and water vapor corrosion.
4. A maximum of six inverters can be stacked. To avoid personal injury or device damage, stack inverters with caution to prevent them from falling over.
5. During the storage period, check the inverter periodically. Replace any damaged packaging promptly.
6. The inverters stored for more than 2 years should be inspected and tested before being put into service.

4.1.2. Battery Storage

The following requirements should be met if the battery is not put into immediate use:

1. Place batteries according to the signs on the carton during storage. Do not put the batteries upside down or store them horizontally.
2. Stack battery cartons in accordance with the stacking requirements printed on the external carton.
3. Store the battery out of reach of children and animals.
4. Store the battery in an area where there is minimal dust and dirt.
5. Handle batteries with care to avoid damage.
6. The requirements for the storage environment are as follows:

a. Ambient temperature: -10~55°C, recommended storage temperature: 15~30°C
b. Relative humidity: 15%~85%
c. Place batteries in a dry, clean, ventilated location free from dust.
d. Store batteries in a place that is away from corrosive organic solvents and gases.
e. Keep batteries away from direct sunlight.
f. Keep batteries at least 2 meters away from heat sources.

7. The batteries in storage must be disconnected from external devices and the indicators (if any) on the batteries should be off.
8. Warehoused batteries should be delivered based on the "first in, first out" stock control.
9. The warehouse keeper should collect battery storage information every month and report to the planning department. Batteries stored for more than 6 months should be assessed and charged periodically.

10. Capacity loss may occur if a lithium battery is stored for a long time. After a lithium battery is stored for 12 months in the recommended storage temperature, the irreversible capacity loss rate is 3%~10%. It is recommended that batteries not be stored for a long period. If the batteries need to be stored for more than 6 months, it is recommended to recharge the batteries to 65~75% of the SOC.

4.2. Transport

During transportation, please follow these guidelines:

1. Use the original packaging for transportation. If the original packaging is not available, place the product inside a suitable cardboard box with adequate protection and seal the carton.
2. Handle with care, choose the corresponding handling method according to the weight, and pay attention to safety. Mechanical aids should always be used in preference to lifting by hand.



< 18 kg | 18-32 kg | 32-55 kg | > 55 kg

3. Keep the packaging dry and away from potential sources of damage during transportation.
4. Secure the Product during transportation to prevent falling or mechanical impact.

5. Mounting

5.1. Check the Outer Packing

Before unpacking the product, check the outer packaging for damage, such as holes, signs of mechanical damage or water damage. If any damage is found, do not unpack the product and contact your dealer as soon as possible.

5.2. Scope of Delivery

Check the scope of delivery and inspect components to ensure they are present and undamaged.
Contact your distributor if the packed components are incomplete or damaged.

SMILE-G3 Single Phase Inverter				
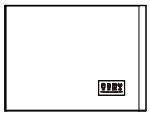		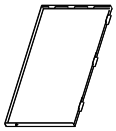	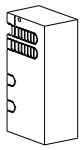	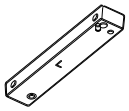
Inverter (×1)	TOP Cover (×1)	Right Cover (×1)	Cable Cover (×1)	Left Support Foot (×1)
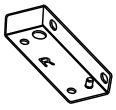	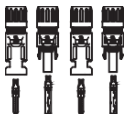	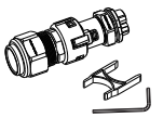		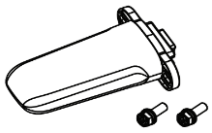
Right Support Foot (×1)	PV+ & PV- Connectors (×2)*	Grid Connector (×1)	Backup Connector (×1)	Wi-Fi Module (×1)
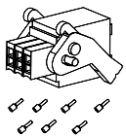		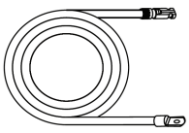	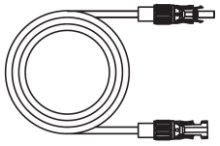	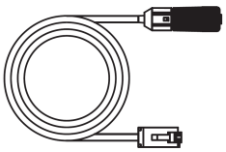
6 Pin AUX Terminal Block (×1) with terminals (×7)	Series Batteries Main Positive Power Cable (×1)	Series Batteries Main Negative Power Cable (×1)	Power Cable Between Series Batteries** (×1)	Communication Cable Between Series Batteries** (×1)
			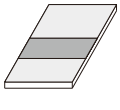	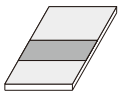
Grounding Cable (×1)	Y Type Terminals ** (×3)	Hexagon Head Screw M5*12 (×9)	Quick Installation Guide (×1)	System Wiring Diagram Sheets (×1)

* Not included in SMILE-G3-B5-INV

** Not included in SMILE-G3-S3.6-INV

SMILE-G3-BAT-8.2P			
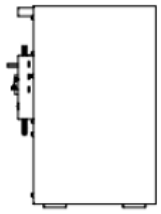	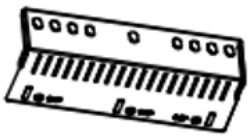		
Battery (×1)	Top Wall Bracket (×1)	M5 Y Type Terminal (×2)	Battery Cable Cover (×1)
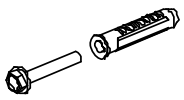	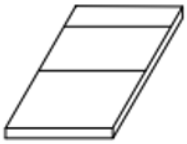	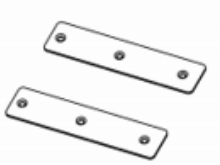	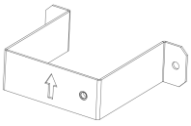
Wall Anchor ST6*55 (×4)	Quick Installation Guide (×1)	Gap Gasket for Battery Stacking (×2)	Support for Battery Cable Cover (×1)
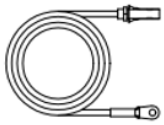	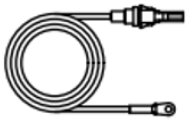	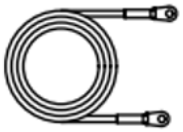	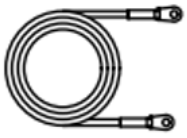
Battery Power - Cable* (×1)	Battery Power + Cable* (×1)	BAT+ Power Cable (×1)	BAT- Power Cable (×1)
			
Battery Communication Cable (×1)	Back Support Stud for Battery (×1)	Cheese Head Screw M5*10 (×2)	Countersunk Screw M5*10 (×8)
			
Wall Gap Shim (×1)			

* For connecting with SMILE-G3-T4/T6/T8/T10-INV

SMILE-G3-BAT-10.1P			
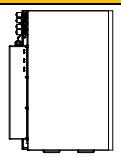	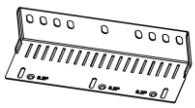		
Battery (×1)	Top Wall Bracket (×1)	M5 Y Type Terminal (×2)	M6 Ring Terminal (×4)
	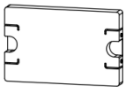	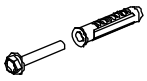	
Battery Cable Cover (×1)	Breaker Cover (×1)	Wall Anchor ST6*55 (×4)	Spanner (×1)
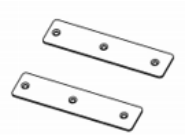			
Gap Gasket for Battery Stacking (×2)	BAT+ Power Cable (×1)	BAT- Power Cable (×1)	Battery Communication Cable (×1)
		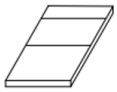	
Wall Gap Shim (×1)	Countersunk Head Screw M5*10 (×10)	Quick Installation Guide (×1)	

SMILE-G3-BAT-3.6S/3.8S/4.0S			
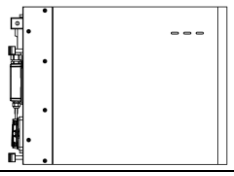		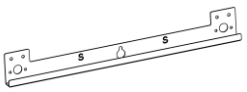	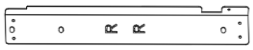
Battery (×1)	Battery Cable Cover (×1)	Top Beam of Wall Bracket (×1)	Right Beam of Wall Bracket (×1)
	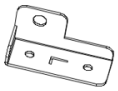		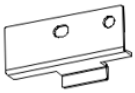
Left Beam of Wall Bracket (×1)	Left Holder for Wall Bracket (×1)	Right Holder for Wall Bracket (×1)	Grounding Bar (×1)
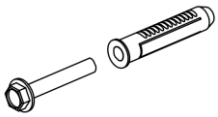			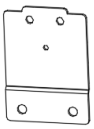
Wall Anchor ST6*55 (×6)	Hexagon Head Large Washer Screw M5*12 (×6)	Flange Nut M4 (×7)	Connector for Wall Brackets* (×2)
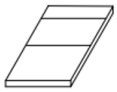			
Quick Installation Guide (×1)			

* For battery-ready application, connection between the wall bracket of SMILE-G3-T4/T6/T8/T10-INV and the first wall bracket of SMILE-G3-AT-3.6S&4.0S

Accessories for Battery Base of SMILE-G3-BAT-3.6S/4.0S *			
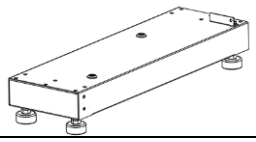	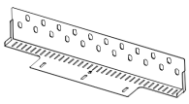	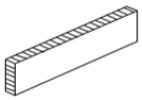	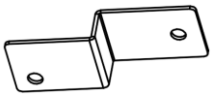
Battery Base (×1)	Top Wall Bracket (×1)	Position Plate (×1)	Right Connection Plate (×6)
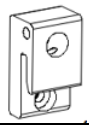	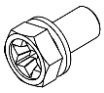		
Right Connection Block for Base Unit (×1)	Hexagon Head Screw M5*12 (×20)	Limit block (×10)	Pan Head Screw M5*10 (×13)

* Battery Base is optional

SMILE-G3-BAT-3.8S			
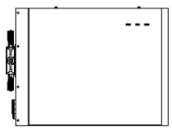		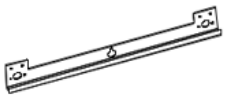	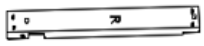
Battery (×1)	Battery Cable Cover (×1)	Top Beam of Wall Bracket (×1)	Right Beam of Wall Bracket (×1)
	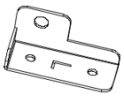		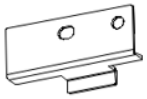
Left Beam of Wall Bracket (×1)	Left Holder for Wall Bracket (×1)	Right Holder for Wall Bracket (×1)	Grounding Bar (×1)
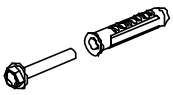			
Wall Anchor ST6*55 (×6)	Support Stud for Battery Cable Cover (×2)	Hexagon Head Large Washer Screw M5*12 (×6)	Flange Nut M5 (×7)
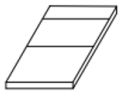			
Quick Installation Guide (×1)			

Accessories for Battery Base of SMILE-G3-BAT-3.8S *			
	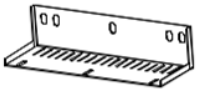	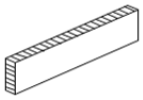	
Battery Base (×1)	Top Wall Bracket (×1)	Position Plate (×1)	Right Connection Plate (×4)
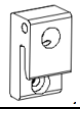			
Right Connection Block for Base Unit (×4)	Hexagon Head Screw M5*12 (×15)	Hexagon Head Limit Screw M5*10 (×10)	

***** Battery Base is optional

Accessory Cables for Distanced Horizontal Battery Expansion of SMILE-G3-BAT-3.6S/3.8S/4.0S		
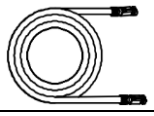	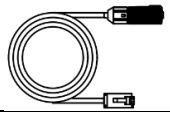	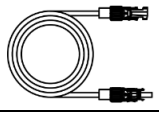
Series Battery Main Negative Power Cable (×1)	Communication Cable Between Two Column Series Batteries (×1)	Power Cable Between Two Column Series Batteries (×1)

5.3. Requirements for Mounting

DANGER

Danger to life due to fire or explosion

Despite careful construction, electrical devices can cause fires.

- Do not mount the energy storage system in areas containing highly flammable materials or gases.
- Do not mount the energy storage system in potentially explosive atmospheres.

5.3.1. Basic Requirements

- SMILE-G3-S5/S3.6/B5-INV, SMILE-G3-BAT-10.1P and SMILE-G3-BAT-3.6S/4.0S are suitable for indoor and outdoor installation.

SMILE-G3-BAT-8.2P and SMILE-G3-BAT-3.8S are only suitable for indoor installation.

- Do not install the inverter in a place where people can easily touch it because the inverter's surface will get extremely hot during operation.
- Do not engage screws into tapped holes using a Hammer Driver, Impact Driver or "Rattle gun". Do not damage screws or threaded holes by tightening with too much torque.
- Do not mount the system in areas with flammable or explosive materials.
- Do not mount the inverter at a place within the reach of children.
- Do not mount the system outdoors in areas of high salt mist likelihood where corrosion may cause damage. An area of high salt mist likelihood refers to a region within 500m from the coast or prone to the sea breeze.

5.3.2. Mounting Environment Requirements

- The system must be mounted in a well-ventilated environment to ensure adequate heat dissipation.
- Do not mount in a location that will be exposed to direct sunlight. When mounted under direct sunlight, the power of the system may be derated due to additional temperature rise and the longevity of the product will be reduced.
- Recommend to mount the system in a sheltered place or mount an awning over it.
- The optimal temperature range for the battery to operate is 15 to 30℃.
- Favour locations that are indoors, under cover, or generally protected from the elements and extreme temperatures (e.g. in a garage).
- Do not place the system near water sources such as downpipes or sprinklers.
- If the battery is mounted in the garage, ensure the product is adequately protected from potential mechanical impact.
- The indoor version of the system must be installed in an environment with a relative humidity of no more than 90% (no condensation).

- The system should not be installed in locations that are higher than 3000 meters above sea level.
- The system should not be installed in places with flammable materials, gases, or explosive atmospheres.

5.3.3. Mounting Structure Requirements

- The surface to which the Battery System is to be mounted shall be fire-rated where required by local regulations.
- Out of an abundance of caution, it is recommended that the system be mounted on non-flammable building materials, even when not required by local regulations.
- Ensure that the mounting surface is sufficiently sturdy to bear the weight of the Product.
- In residential installation, do not mount the system on drywalls or walls made of gyprock or similar materials with poor sound insulation. The noises generated by the inverter can be noticeable and may be exacerbated by locations with poor insulation or where echoing may occur.

5.3.4. Mounting Angle and Stack Requirements

The battery should be placed on the ground and secured to the wall.
The inverter should be placed on the top of the battery and secured to the battery.
The installation angle requirement is as follows:

- Do not mount the inverter at forward-tilted, side-tilted, horizontal, or inverted positions.

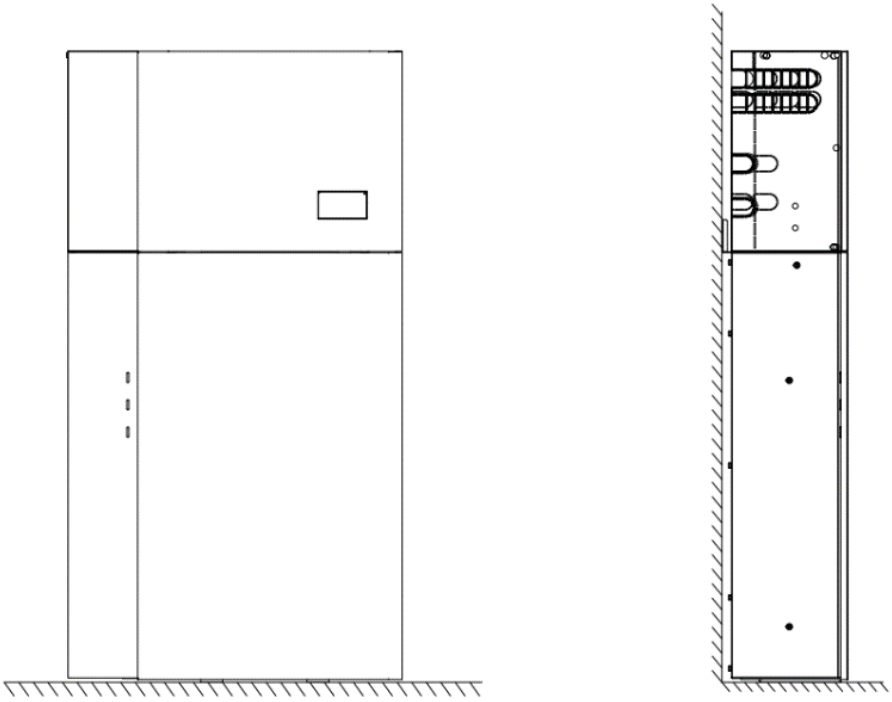

5.3.5. Mounting Space Requirements

- Reserve sufficient space around the energy storage system to ensure sufficient space for installation, maintenance and heat dissipation.
- The side clearance is a recommendation which can be adjusted according to the end users' requirements. Clearances may be up to 100mm less than noted if ventilation is adequate and no restrictions or objects will limit access to the labelling or switches of the Product or to the use of tools to remove covers or service/remove the Product.

***For Australia, according to ASNZ5139-2019-4.2.2.2, the non-combustible material needs to be placed between the wall and the battery unit and must extend 600mm to the left and right of the battery and 900mm above it.**

Recommended clearances for SMILE-G3-BAT-8.2P/10.1P

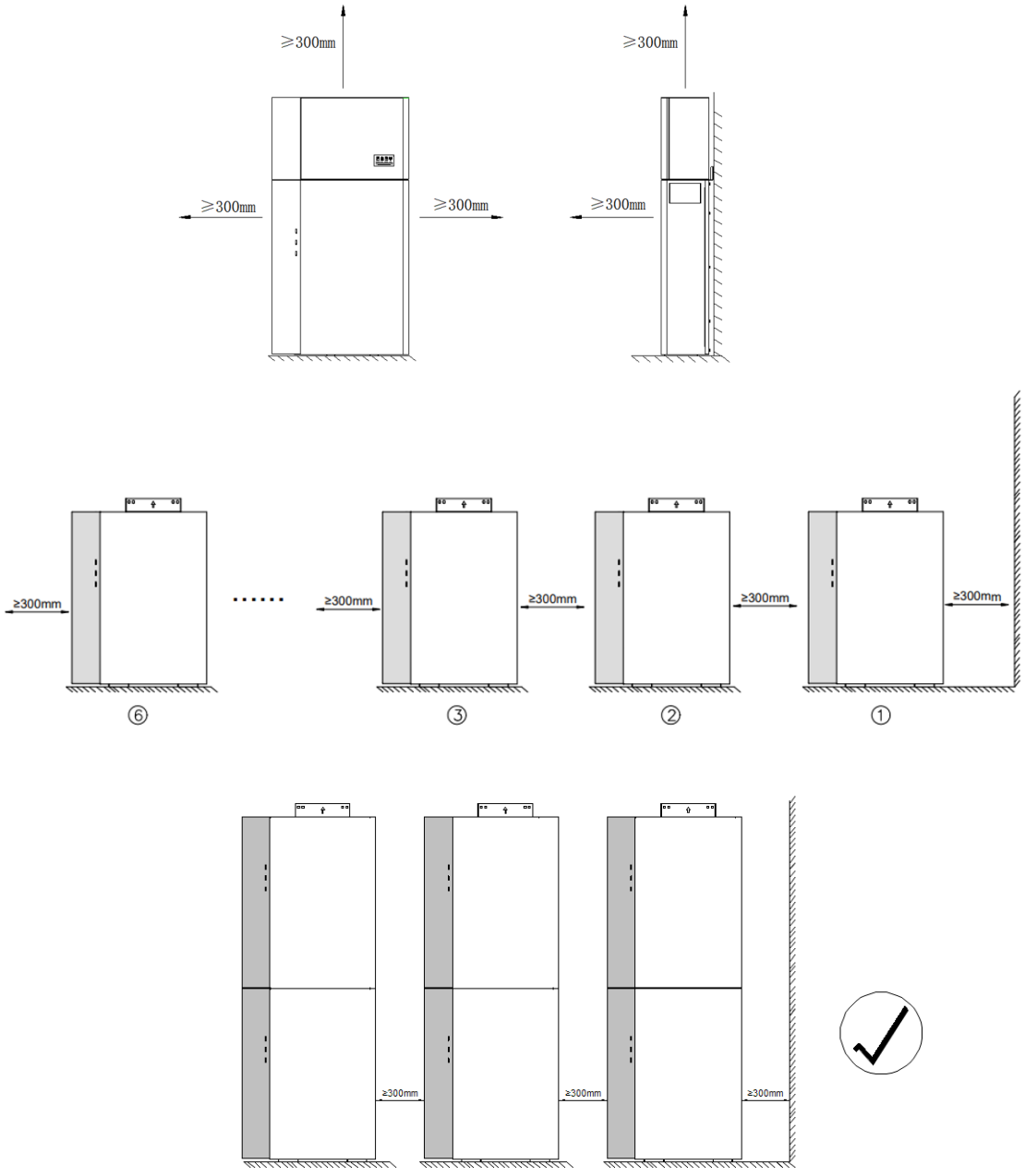

Recommended clearances for series batteries
Recommend a minimum of 150mm off the ground was advisable to protect from submergence, so the series batteries should be mounted on base unit or by wall bracket.

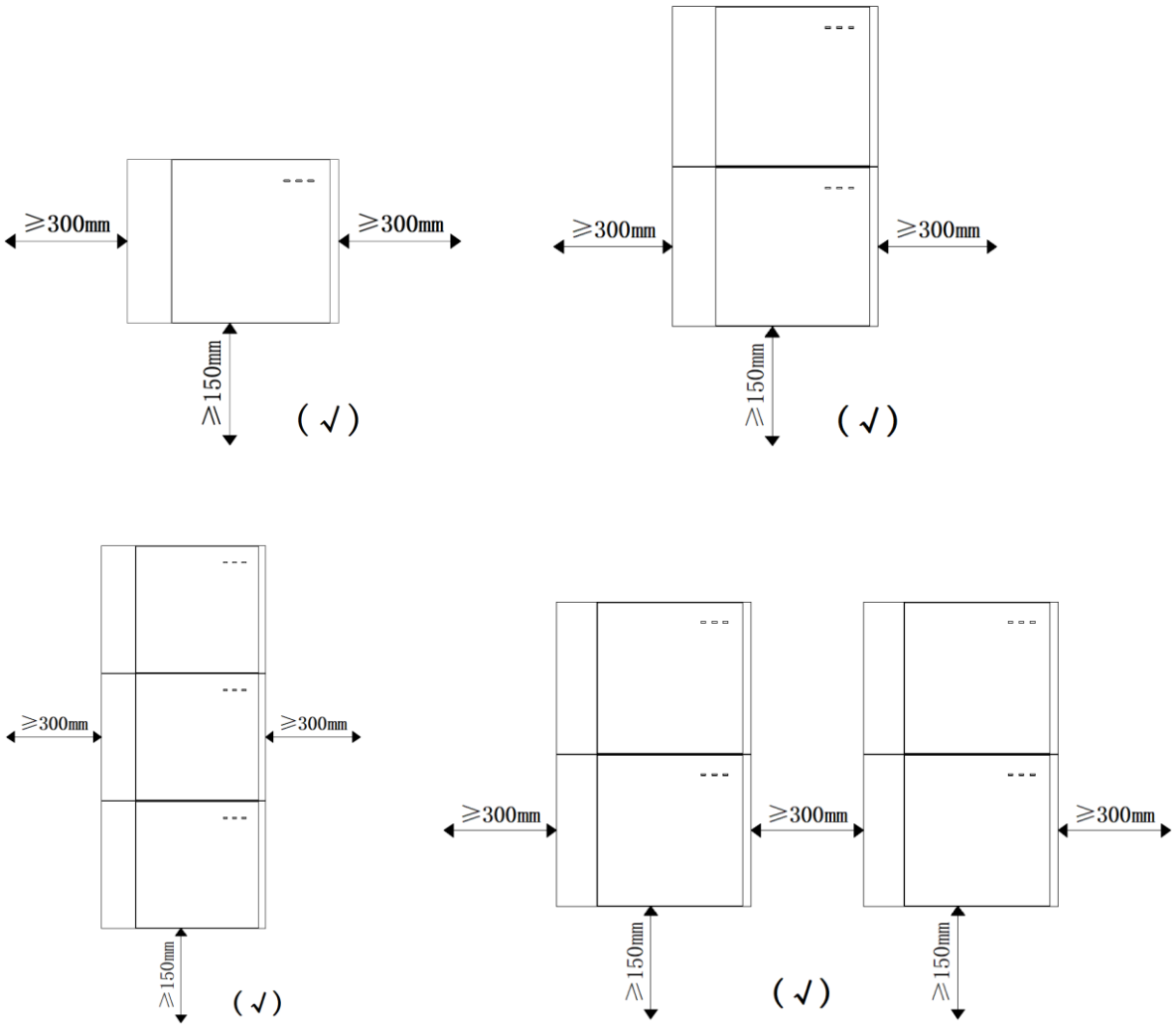

Local Standards may add additional clearance requirements, particularly regarding clearances between the Battery System and other Electrical Appliances.

5.4. Prepare Tools and Instruments

Category	Tools and Instruments		
Installation			
	Hammer drill (with a Φ10mm drill bit)	Torque socket wrench SW10	Multimeter (DC voltage range ≥ 1000V)
	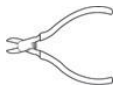	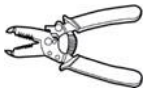	
	Diagonal pliers	Wire stripper	T20/PH2 screwdriver (torque range: 0-5Nm), L=150mms
			
	Rubber mallet	Utility knife	Cable cutter
	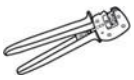		
	Crimping tool (model: PV-CZM-22100)	Bootlace/Ferrule terminal crimper	Disassembly and assembly tool of PV connector
			
	Vacuum cleaner	Heat shrink tubing	Heat gun
			
	Marker	Measuring tape	Bubble or digital level
Personal Protective Equipment			
	Safety gloves	Safety goggles	Anti-dust respirator
			
	Safety shoes		

5.5. Mount the System

5.5.1. Mount the Parallel Battery SMILE-G3-BAT-8.2P

Mounting steps for battery SMILE-G3-BAT-8.2P are as follows:
a. Remove the battery from the carton and transport it to the installation site with a trolley or other manual handling aid capable of safely moving the product weight. Secure the Product during any movement or transport.
b. Secure the provided back support stud to the right lower corner of the battery back (tool: SW10 hexagon sleeve, torque: 3.5Nm).
Place the battery against the wall at the required final position. The Battery should be level (check with Spirit Level) before marking the holes in the wall. Where the ground requires levelling beneath the battery, or where the battery is to be mounted on a sub-surface designed to provide level mounting, the levelling surface should be secure and solid (if using a cement pad) before locating the battery and marking the wall for the mounting positions.
c. Remove the wall bracket and cover the top of the battery with plastic bag, then drill 3 holes on the wall with drill Φ10 and a depth of about 70mm, clean the holes and insert screw anchors into the drilling holes.
After removing the plastic bag, fix the top wall bracket on top of the battery (tool: T20 screwdriver, torque: 2.5Nm), secure the top wall bracket to the wall using the provided screws by using the SW10 hexagon sleeve.
If you want to mount more batteries and prefer to mount them side by side, please repeat the mounting steps from a to c.
d. If adding another battery on top of the first battery, take out the 2 gap gaskets for battery stacking, 4 cheese head screws M5X10 and 2 hexagon head screws M5X10, tighten them (tool: T20 screwdriver, torque: 2.5Nm) to the top of the bottom battery.
e. Remove another battery from the carton and transport it to the installation site. Place a PE bag at the bottom of the battery before laying it down, then remove the 2 feet located at the bottom of the battery (tool: T20 screwdriver).
f. Hold the side handles, lift the top battery onto the bottom battery, and align the battery's outer contour.
g. Repeat the mounting steps from b to c.
h. Take out the support for battery cable cover from the battery package, and tighten it to the lower left of the battery housing with countersunk head screws M5X10 (tool: T20 screwdriver, torque: 2.5Nm).
If two batteries are not aligned perfectly due to uneven wall, please put provided wall gap shim behind the top wall bracket.

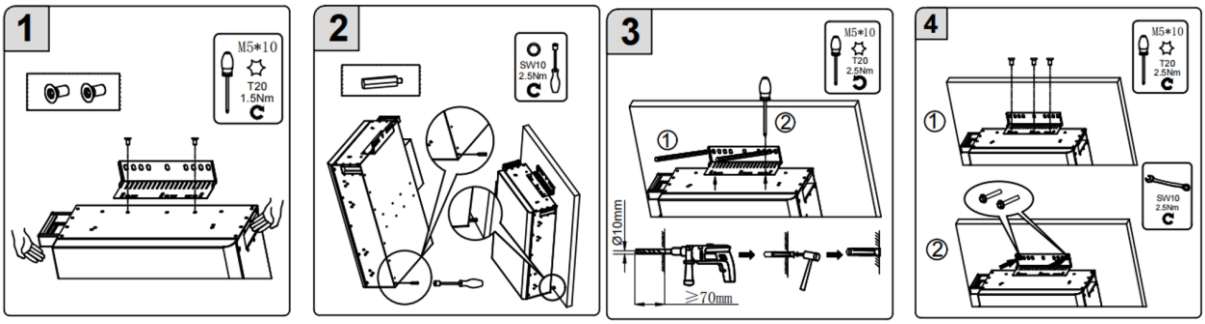

Note: Steps 5~9 are only for batteries stack mounting

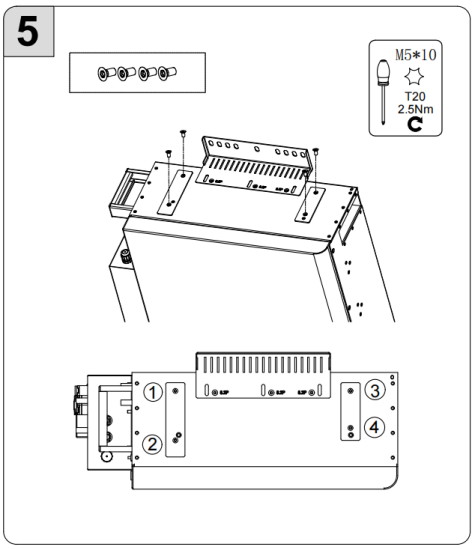

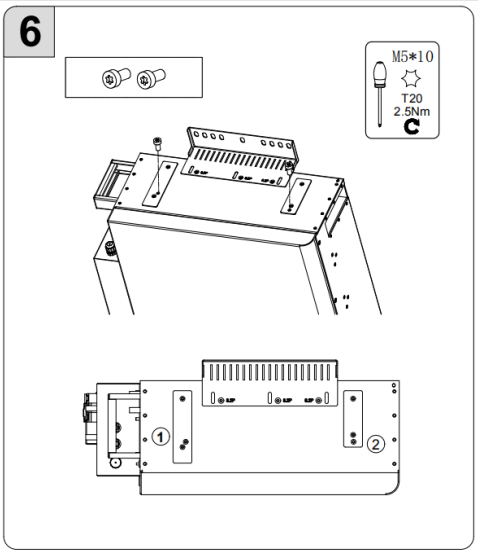

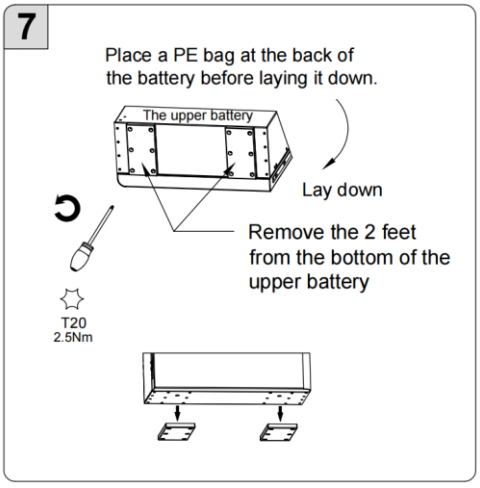

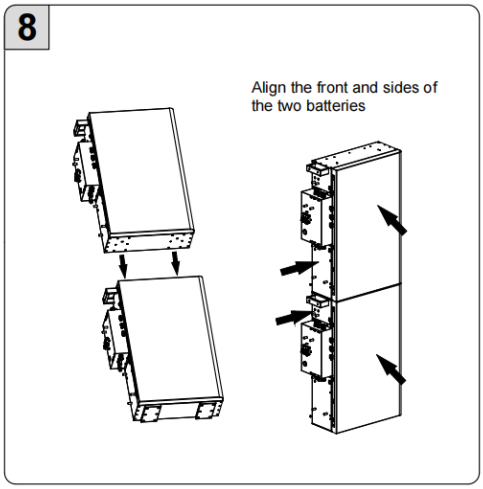

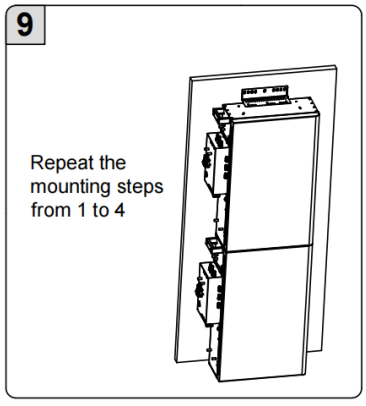

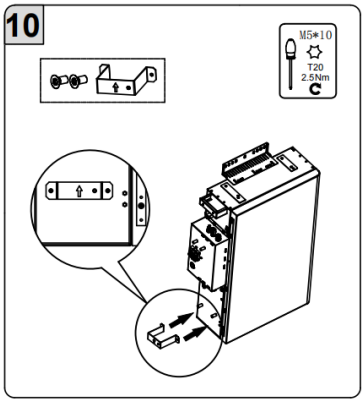

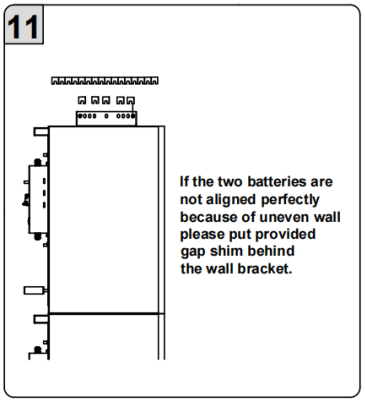

5.5.2. Mount the Parallel Battery SMILE-G3-BAT-10.1P

Mounting steps for battery SMILE-G3-BAT-10.1P are as follows:

a. Remove the battery from the carton and transport it to the installation site with a trolley or other manual handling aid capable of safely moving the product. Secure the Product during any movement or transport.

b. Place the battery against the wall at the required final position. The battery should be level (check with Spirit Level) before marking the holes in the wall. Where the ground requires levelling beneath the battery, or where the battery is to be mounted on a sub-surface designed to provide level mounting, the levelling surface should be secure and solid (if using a cement pad) before locating the battery and marking the wall for the mounting positions.

c. Remove the wall bracket and cover the top of the battery with a plastic bag, then drill 3 holes on the wall with drill Φ10 and a depth of about 70mm, clean the holes and insert screw anchors into the drilling holes.
After removing the plastic bag, fix the top wall bracket on top of the battery (tool: T20 screwdriver, torque: 2.5Nm), secure the top wall bracket to the wall using the provided screws by using the SW10 hexagon sleeve.
If you want to mount more batteries and prefer to mount them side by side, please repeat the mounting steps from a to c.

d. If adding another battery on top of the first battery, take out the 2 gap gaskets for battery stacking and 4 countersunk head screw M5X10, tighten them (tool: T20 screwdriver, torque: 2Nm) to the top of the bottom battery.

e. Remove another battery from the carton and transport it to the installation site. Place a PE bag at the bottom of the battery before laying it down, then remove the 2 feet located at the bottom of the battery (tool: T20 screwdriver).

f. Tighten the top wall bracket to the battery top.

g. Hold the side handles, lift the top battery onto the bottom battery, and align the battery's outer contour.

h. Repeat the mounting steps from b to c.
If the two batteries are not aligned perfectly due to uneven wall, please put provided wall gap shim behind the top wall bracket.

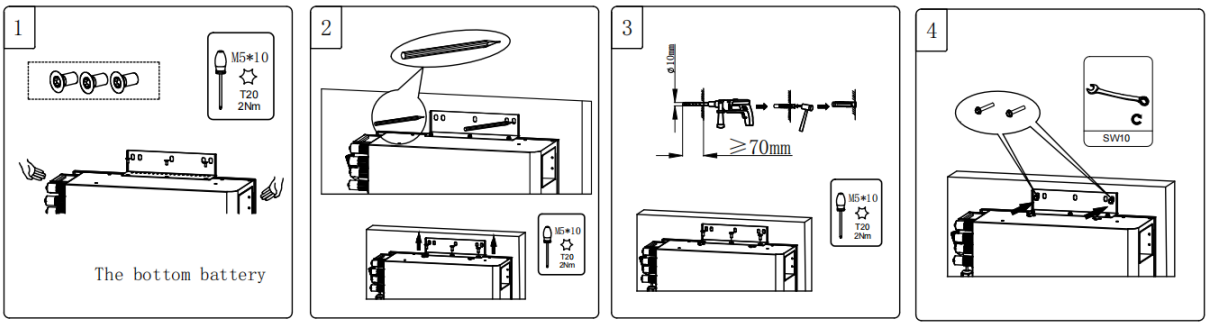

Note: Steps 5~11 are only for batteries stack mounting

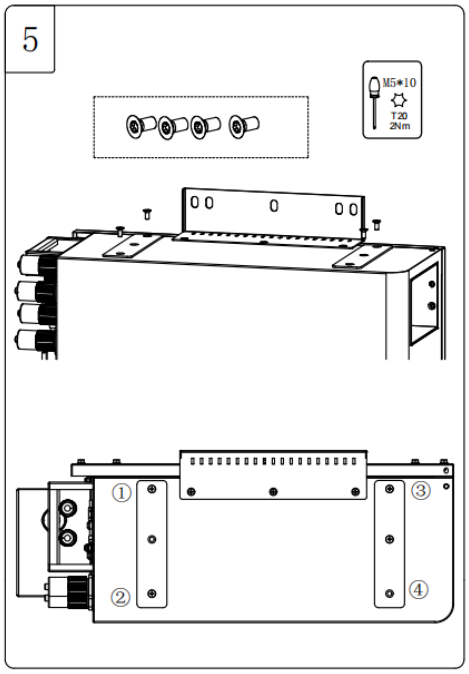

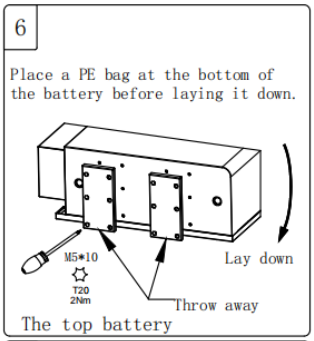

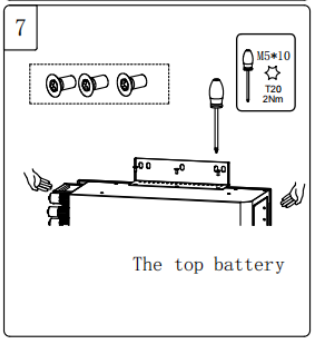

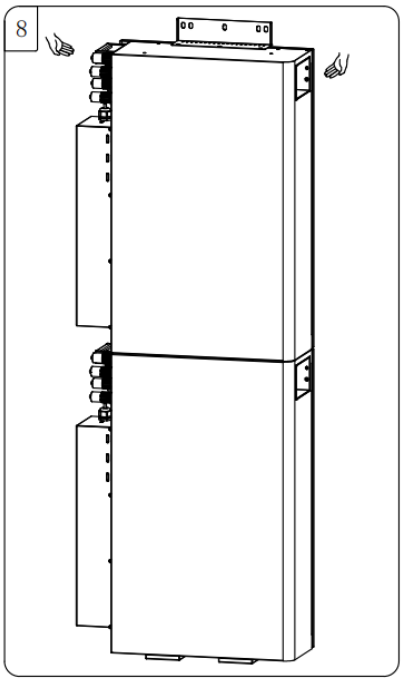

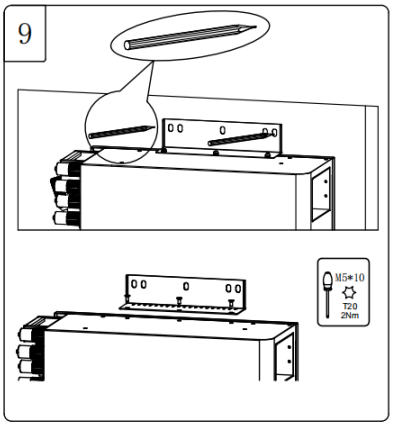

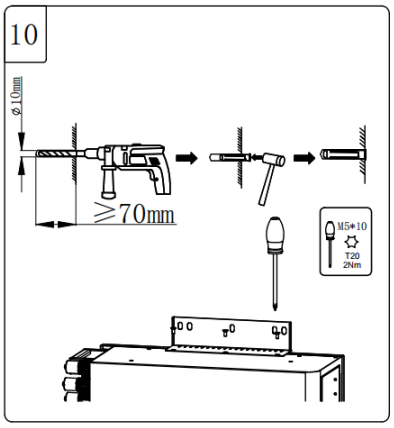

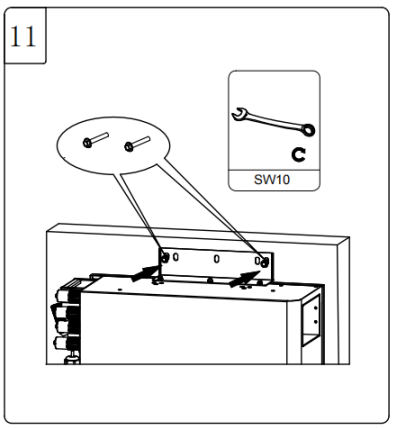

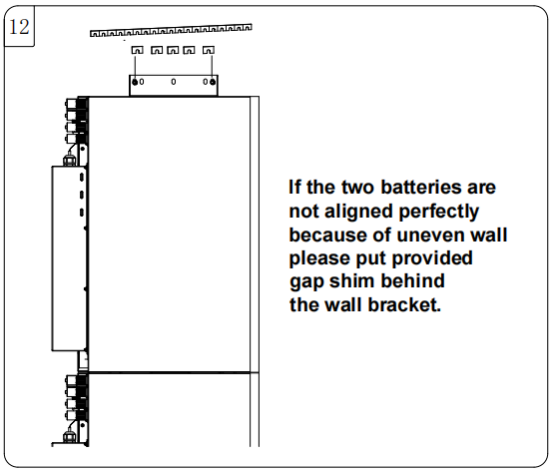

5.5.3. Mount the Series Batteries

5.5.3.1 Wall Bracket Installation for One Battery Installation

Wall bracket installation for one battery, the mounting steps are as follows:

a. Take out the top, left and right beams of the wall bracket from the package and assemble them with M5 nuts (tool: SW8 hexagon sleeve, torque: 2.5Nm).

b. Select a suitable height for the first bottom wall bracket location. Please reserve enough height if you want to add more batteries later.

Mark the upper middle drill position of the wall bracket and drill the marked hole with a Φ10 drill. Insert the screw anchor into the drill hole, and pre-tighten the wall bracket horizontally with the provided screw. Retain 5~10mm from the screw head to the wall.

c. Hang the wall bracket on the screw head, adjust its horizontal position, then mark the other drill positions and drill the marked holes with a Φ10 drill.

d. Secure the wall bracket to the wall and tighten the screws with the SW10 socket wrench.

e. Take out the left holder for wall bracket and right holder for wall bracket from the package, and tighten them to the lower left and lower right side of the battery back (tool: T20 screwdriver, torque: 2.5Nm).

f. Horizontally lift the battery using the handles at two sides and let the top hooks on the back of the battery slide from right to left in the upper beam of the wall bracket.

g. Secure the battery to the wall bracket and tighten them with two M5*12 screws (tool: T20 screwdriver, torque: 2.5Nm).

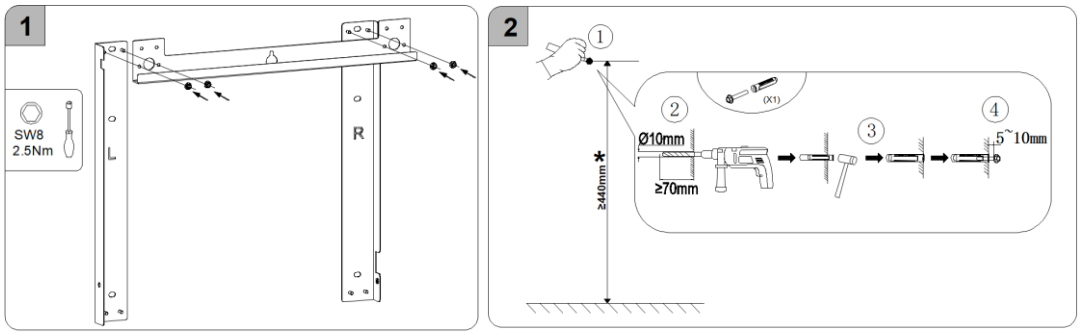

*This recommended value “440mm” is for wall bracket location of the bottom battery. Depends on the number of expansion batteries mounted later, it is advisable to have a minimum of 150~200mm off the ground to protect from submergence.

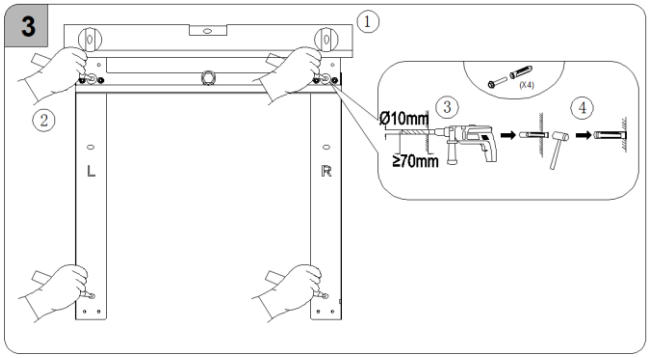
3
1
2
L
R
(X4)
Ø10mm
3
4
≥70mm

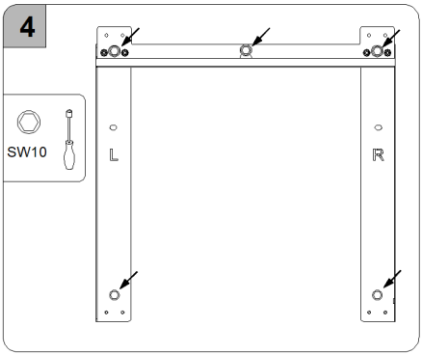
4
SW10
L
R

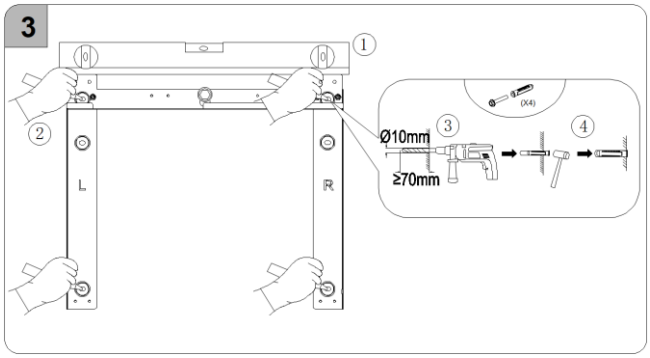
3
1
2
L
R
(X4)
Ø10mm
3
4
≥70mm

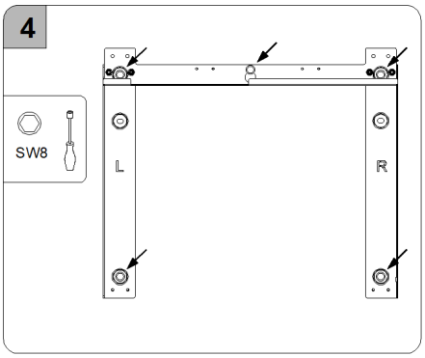
4
SW8
L
R

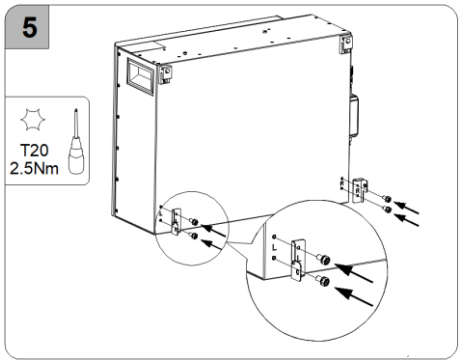
5
T20
2.5Nm

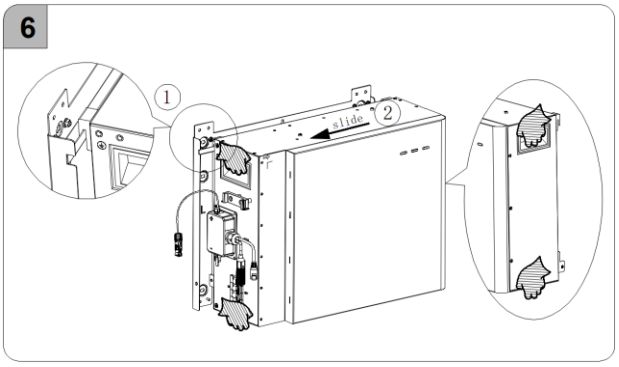
6
1
slide
2

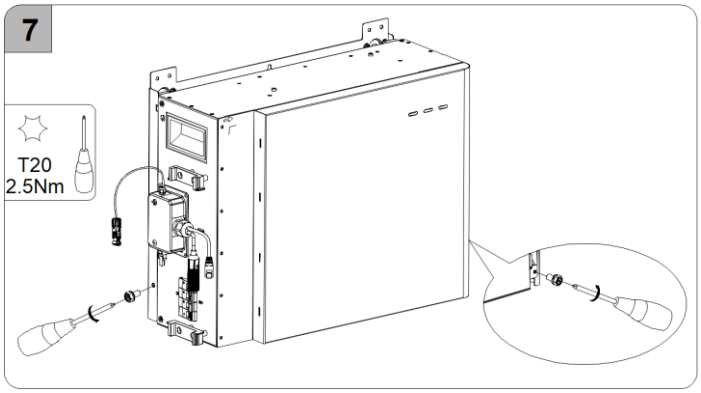
7
T20
2.5Nm

5.5.3.2 Wall Bracket Installation for Multiple Batteries Installation

When mounting multiple batteries with wall brackets for the first time, please follow these steps:

a. Take o ut the top, left and right beams of the wall bracket from the package, and assemble them with M5 nuts (tool: SW8 hexagon sleeve, torque: 2.5Nm).

Align the upper hole of the lower wall bracket with the lower rivet of the upper wall bracket, assemble them with M5 nuts (tool: SW8 hexagon sleeve, torque: 2.5Nm), and then combine several wall brackets into a whole.

b. For other mounting steps, please see Chapter 5.5.2.1 Wall Bracket Installation for One Battery Installation and follow step b to step g.

c. Take out the grounding bar from the package and use it to connect the lower left corner of the upper battery and the upper left corner of the lower battery (tool: T20 screwdriver, torque: 2.5Nm).

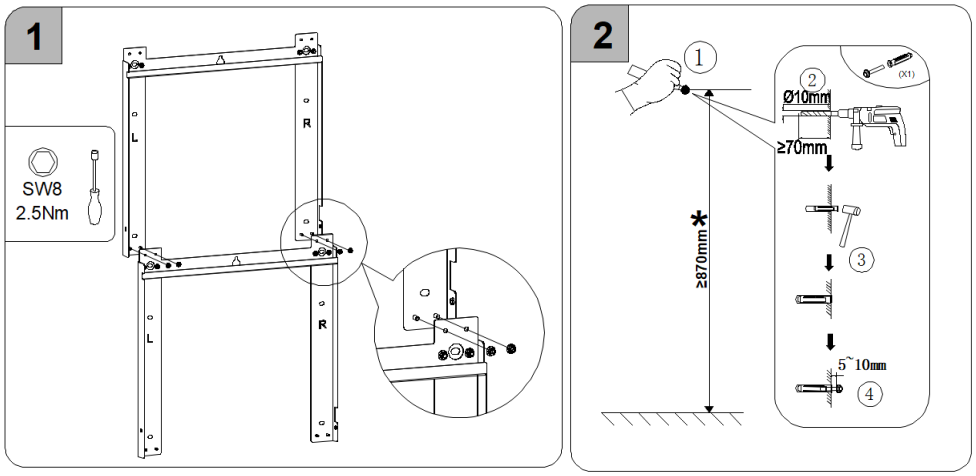

*This recommended value “870mm” is for wall bracket location of the second battery seeing from the bottom up. Depends on the number of expansion batteries mounted later.

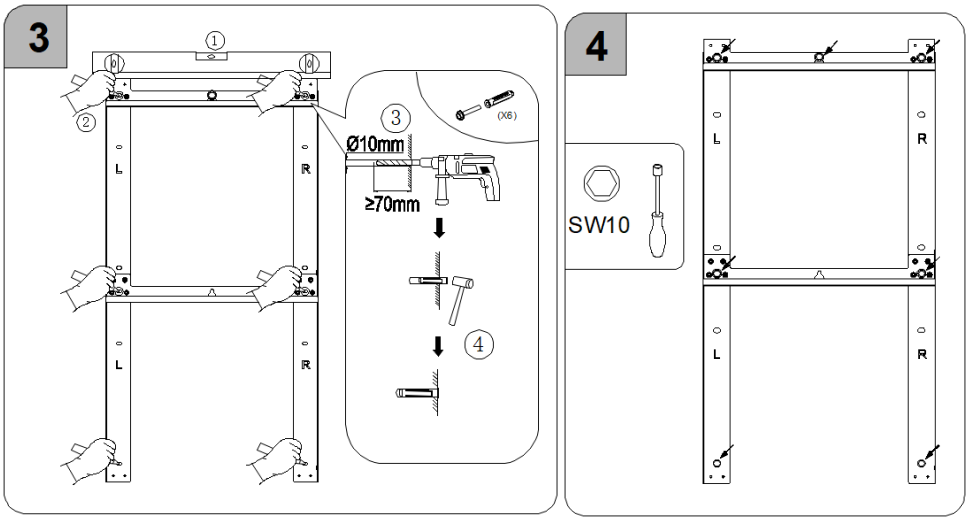

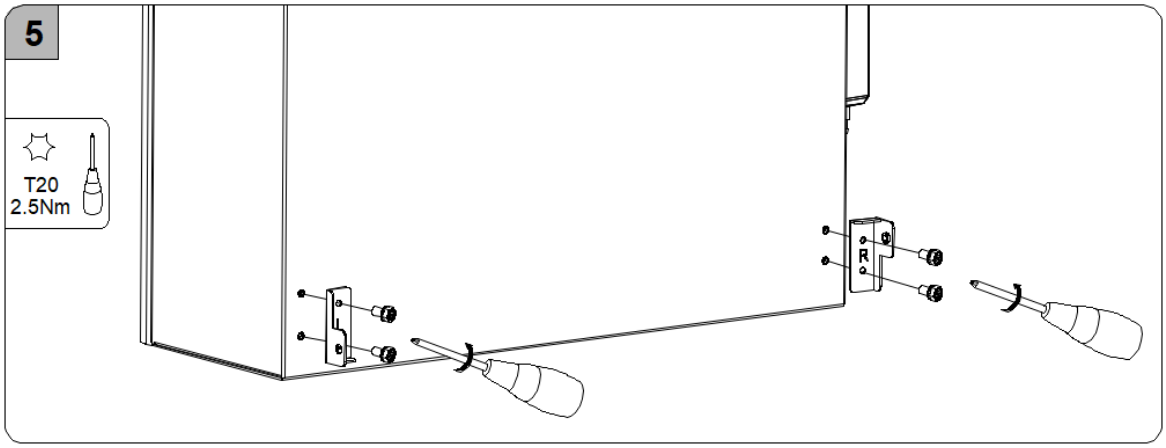
5
T20
2.5Nm
L
R

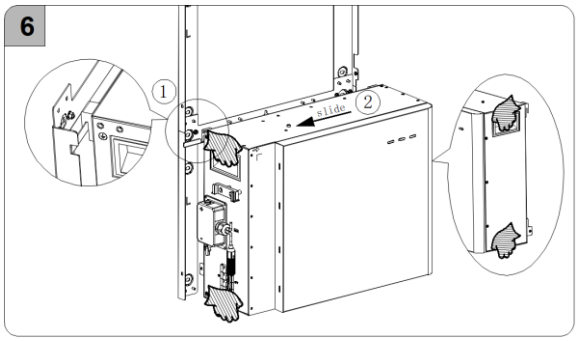
6
1
slide
2

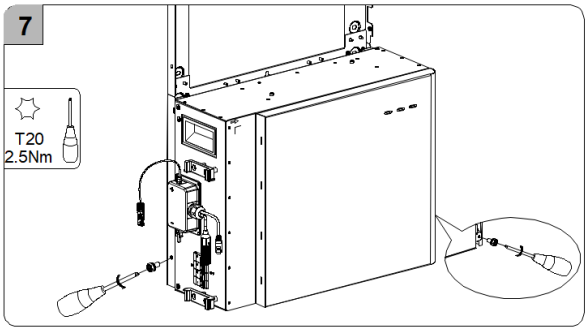
7
T20
2.5Nm

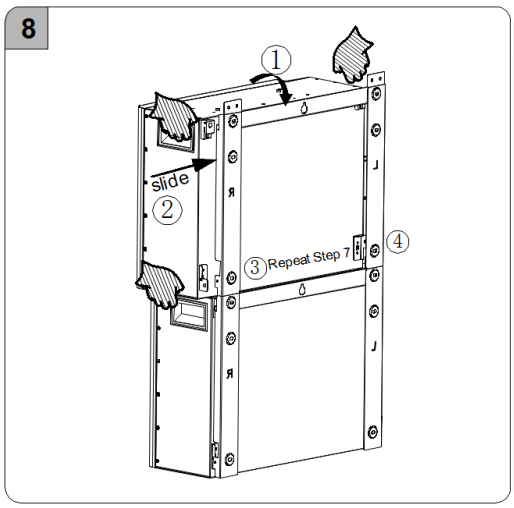
8
1
Slide
2
3 Repeat Step 7
4

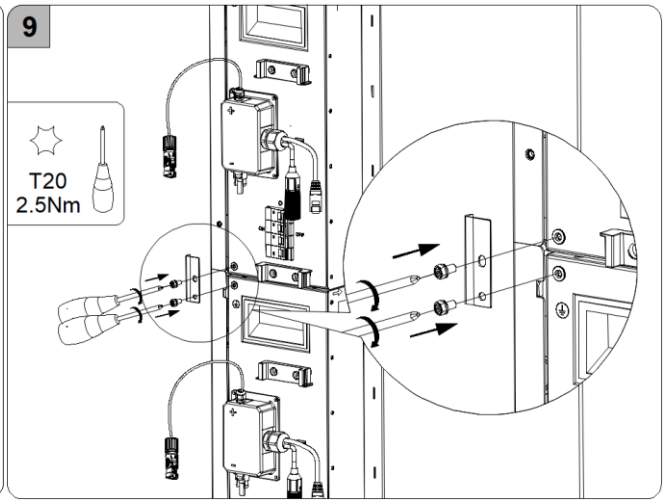
9
T20
2.5Nm

5.5.3.3 Wall Bracket Installation for Batteries Expansion Installation

More batteries installation (from bottom to top), suitable for secondary battery installation scenario. Expansion batteries should be mounted below existing wall mounted batteries, please follow these steps:

a. Take out the top, left and right beams of the wall bracket from the package, assemble them with M5 nuts (tool: SW8 hexagon sleeve, torque: 2.5Nm).
Align the upper holes of the lower wall bracket with the lower rivets of the upper wall bracket, mark the drilling position of the newly wall bracket.

b. Remove the newly assembled wall bracket, drill the marked hole with drill Φ10. Insert screw anchors into the drilling holes, tighten the screws with the SW10 hexagon sleeve to secure the wall bracket to the wall.

c. For other mounting steps, please see Chapter 5.5.2.1 Wall Bracket Installation for One Battery Installation and follow step b to step g.

d. Take out the grounding bar from the package and use it to connect the lower left corner of the upper battery and the upper left corner of the lower battery (tool: T20 screwdriver, torque: 2.5Nm).

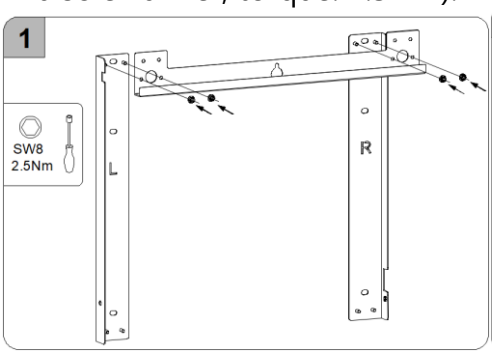

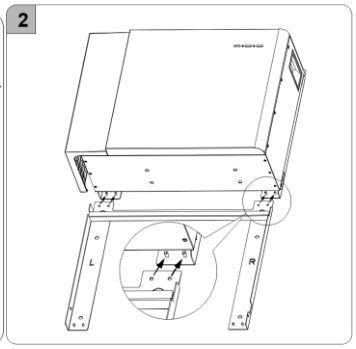

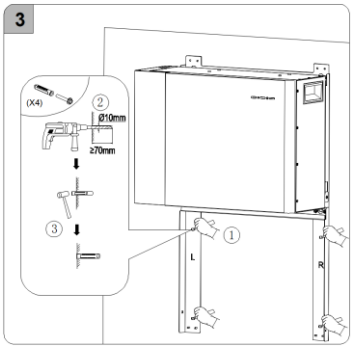

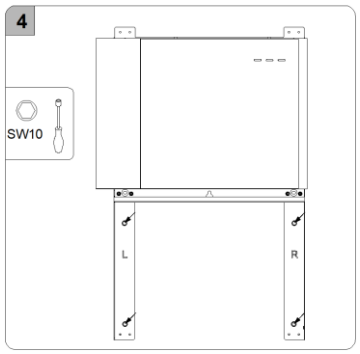

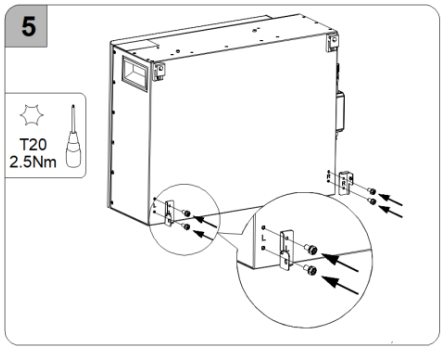

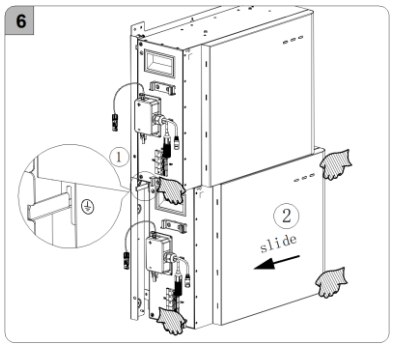

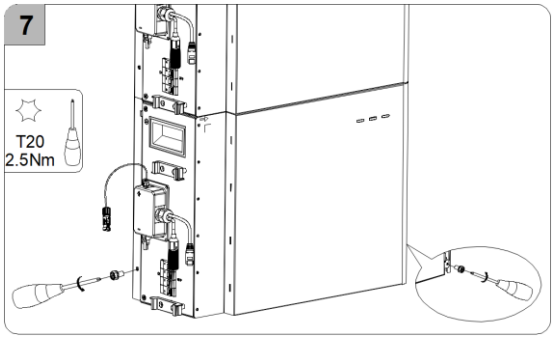

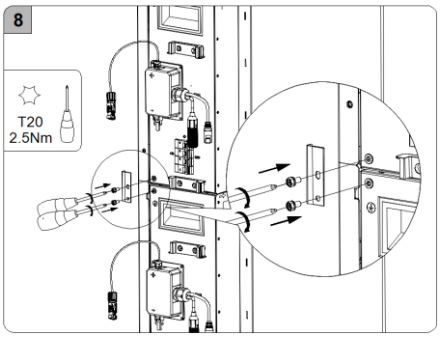

5.5.3.4 Wall-Mounted Battery Disassembling (only for Battery SMILE-G3-BAT-3.6S/4.0S)

CAUTION

Risk of injury due to the weight of the battery

Injuries may be caused if the product is lifted incorrectly or dropped while being transported or mounted. To avoid this danger:

- Transport and lift the product carefully. Take the weight (45kg) of the product into account. Use lifting and conveyance aids such as lifting trolleys wherever possible.
- Always have two or more people to mount and disassemble the product.
- Wear suitable personal protective equipment for all work on the product.

When disassembling the battery that has been mounted with wall bracket and has not directly connected to the inverter, always hold the handles on both sides of the battery firmly and slide it to the right. Once the arrow on the upper left of the cover aligns with the left protruding side of the upper battery, carefully lift the battery forward and off the wall bracket.

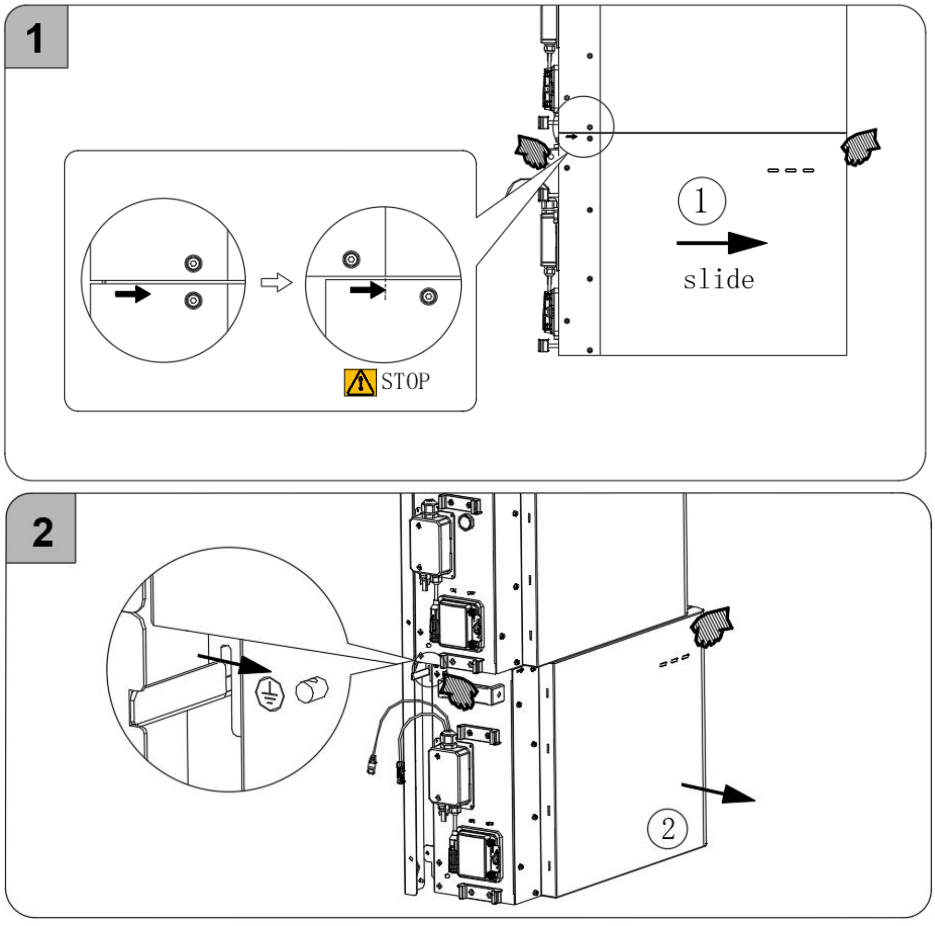

5.5.3.5 Base Installation for Several Series Batteries Installation

When mounting multiple series batteries with base installation for the first time, please follow these steps.

a. Take out the base unit and tighten two hexagon head limit screws M5*12 to the designated location of the base unit's top (tool: T20 screwdriver, torque: 2.5Nm). Take out the right connection block for base unit from the package, and tighten it to the right side of the base unit back.

Take out the position plate and place it against the wall. Place the base unit against the position plate and adjust the feet to level the base unit.

b. Lift the battery by using the handles at two sides, align the bottom holes of the first battery with the screw heads on the top of the base unit. Take out 2 cheese head screws M5*10, and tighten them to battery top's designated location for later position limit. Take out the left holder for wall bracket and right holder for wall bracket, and tighten them to the lower left and lower right side of the battery back.

c. Secure the battery to the base unit, tighten them with one screw M5*12 from the lower left of the battery (tool: T20 screwdriver, torque: 2.5Nm).

d. Take out one right connection plate from the base unit package, use it to connect the lower right corner of the first battery and the upper right corner of the base unit (tool: T20 screwdriver, torque: 2.5Nm).

e. Lift the second battery by using the handles at two sides, align the bottom holes of the second battery with the screw heads on the top of the lower battery. Take out 2 cheese head screws M5*10, and tighten them to battery top's designated location for later position limit. Take out the left holder for wall bracket and right holder for wall bracket, and tighten them to the lower left and lower right side of the battery back.

Continue mounting more batteries by repeating this step.

f. Take out the grounding bars from the battery package, and use it to connect the lower left corner of the upper battery and the upper left corner of the lower battery (tool: T20 screwdriver, torque: 2.5Nm).

g. Take out the right connection plates from the base unit package, use them to connect the lower right corner of the upper battery and the upper right corner of the lower battery (tool: T20 screwdriver, torque: 2.5Nm).

h. Pre-mount the top wall bracket to the upper battery top and mark drill positions.

i. Remove the top wall bracket and cover the top of the battery with a plastic bag. Then, drill 3 holes in the wall with a Φ10 drill to a depth of about 70mm, clean the holes and insert screw anchors into the drill holes.

j. After removing the plastic bag, tighten the top wall bracket to the top of the battery (tool: T20 screwdriver, torque: 2.5Nm). Secure the top wall bracket to the wall with the provided screws using the SW10 socket wrench.

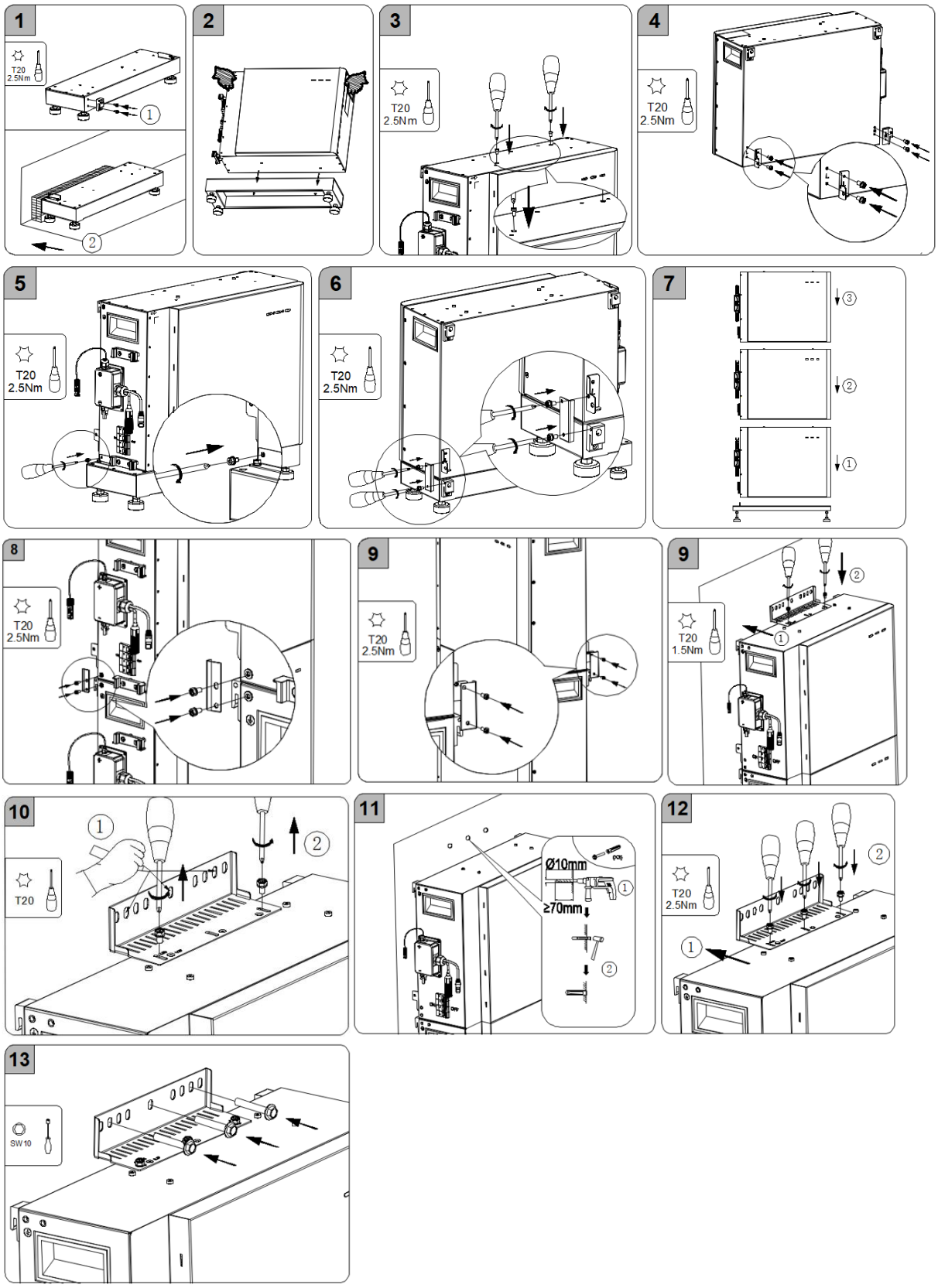

1 to 4 batteries are suitable for the SMILE-G3 single phase energy storage inverter.

For batteries base installation, there was a tiny difference about stacking positioning materials between these series batteries.

For SMILE-G3-BAT-3.6S/4.0S, installers need to mount two limit blocks to the top of the batteries for stacking positioning of upper battery.

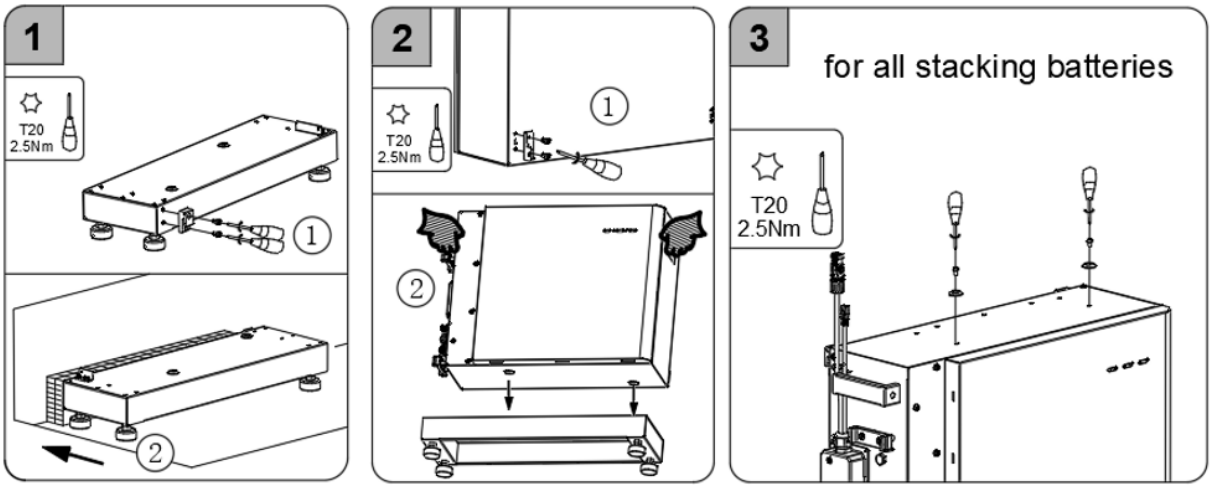

For SMILE-G3-BAT-3.8S, installers need to mount two hexagon head limit screws M5 ×10 to the top of the batteries for stacking positioning of upper battery.

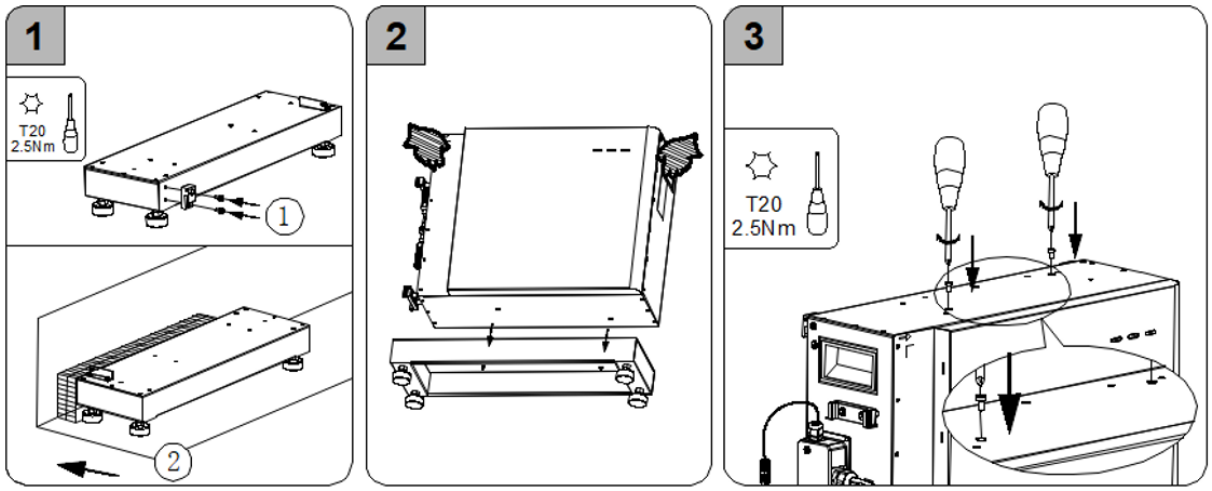

5.5.4. Mount the Inverter

Operating steps for mounting the inverter are as follows:

a. Take out the left support foot and right support foot from the inverter package.

b. Mount the left support foot and right support foot onto the top of the upper battery.

c. Place the inverter into the two support feet.
When doing so, the lower right and left holes on the bottom of the inverter must be inserted into the respective guides in the support feet.

d. Attach the inverter to the side support feet. The inverter mounting holes should align with the horizontal holes of the side support feet. Note that the inverter sits inside (between) the two feet and is secured with two screws on the left and right sides of the system (refer to note "5" in the diagrams below and note the photos below).

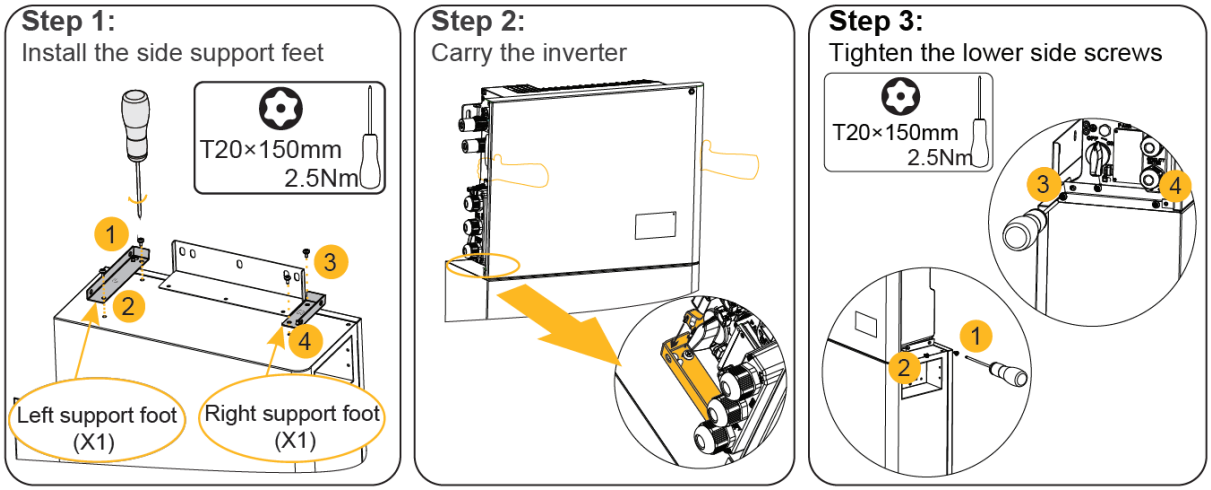

5.5.5. Mount the Wi-Fi Module

a. Remove the protective cover of Wi-Fi port at the left of the inverter.

b. Tighten the Wi-Fi module onto the inverter with two M4×12 screws provided (Tool: T20 screwdriver, torque: 1.6Nm). DO NOT OVERTIGHTEN – do not damage the plastic housing of the Wi-Fi module. Note that AlphaESS always recommends a LAN cable connection over the use of a Wi-Fi module.

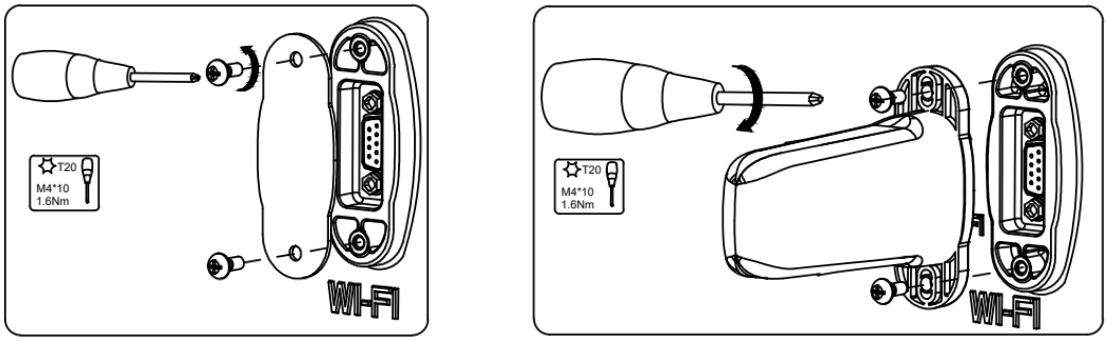

6. Electrical Connection

Precautions

DANGER

Electric Shock Hazard - Before connecting cables, switch OFF all breakers and switches connected to the inverter and batteries.

CAUTION

- Damage to the energy storage system caused by incorrect cable connections is not covered under warranty.
- Only certified electricians accredited by AlphaESS are allowed to connect cables.
- Appropriate PPE must be worn when installing or connecting the Product.

NOTICE

The cable colors shown in the electrical connection diagrams provided in this chapter are for reference only.
Select cables in accordance with local cable specifications (green-and-yellow cables are only used for PE).

6.1. Cable Requirements for Connection

No.	Cable	Type	Conductor Cross Section Area Range	Outer Diameter	Source
1	Battery power cable	Standard PV cable (recommended type: H1Z2Z2-K)	16 mm^2 for SMILE-G3-BAT-8.2P/10.1P, 10 mm^2 for SMILE-G3-BAT-3.6S/3.8S/4.0S	N/A	Supplied with the battery Supplied with the inverter
2	Battery communication cable	Standard network cable (recommended type: Cat5e, UTP, UV-resistant for outdoor use)	0.12~0.2 mm^2 (AWG26~AWG24)	N/A	Supplied with the battery
3*	Signal cable	Standard network cable (recommended type: Cat5e, UTP, UV-resistant for outdoor use)	0.12~0.2 mm^2 (AWG26~AWG24)	N/A	Additional accessories
4	PV power cable	Standard PV cable (recommended type: H1Z2Z2-K)	4~6 mm^2	5.5~9 mm	Purchased by the installer
5**	Signal cable	Standard network cable (recommended type: Cat5e, UTP, UV-resistant for outdoor use)	0.12~0.2 mm^2 (AWG26~AWG24)	4~6 mm	Purchased by the installer
6***	Signal cable	Two-core outdoor shielded twisted pair copper cable	0.5~1.5 mm^2	4~6 mm	Purchased by the installer
7****	Signal cable	Outdoor shielded twisted pair copper cable	0.5~1.3 mm^2	4~6 mm	Purchased by the installer
8	AC power cable for backup	Three-core (L, N and PE) outdoor copper cable	4~6 mm^2	10~14 mm	Purchased by the installer
9	AC power cable for grid	Three-core (L, N and PE) outdoor copper cable	4~10 mm^2	12~18 mm	Purchased by the installer
10	PE cable	Single-core outdoor copper cable	2.5~10 mm^2	N/A	Purchased by the installer

* For CT communication connection with SMILE-G3 single phase inverter.

** For CAN/RS485, LAN, Meter (with CT), DRM communication connection with inverter.

*** For three-phase meter (without CT) communication connection with inverter.

**** For AUX communication connection with inverter.

6.2. Grounding Connection

CAUTION

Electric Shock Hazard

Before doing electrical connection, please ensure the PV switch & all AC and BAT circuit breakers in the energy storage system are switched OFF and cannot be accidentally or unintentionally reactivated.

A grounding point is provided near the grid connector on the energy storage inverter. Prepare M5 Eye/Ring terminals, strip the grounding cable insulation, insert the stripped conductor into the ring terminal lug and crimp with a crimping tool.

Connect the grounding terminal to the inverter (tool: T20 screwdriver, torque: 2.5Nm).

Grounding connection for the energy storage inverter

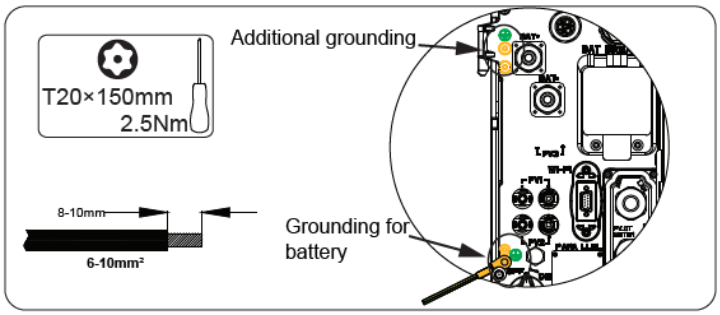

Grounding connection with series battery

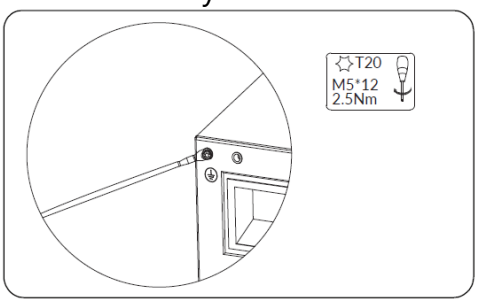

Grounding connection with parallel battery

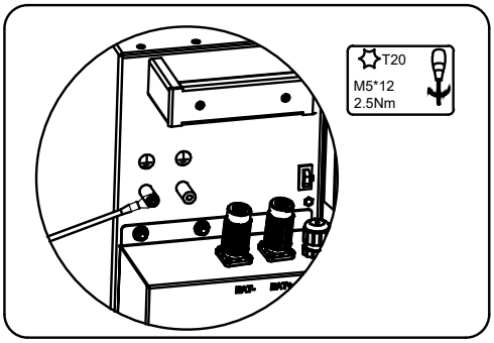

6.3. AC Connection

6.3.1. Requirements for the AC Connection

AC cable requirements are as follows:
☐ Conductor type: copper conductor (tinned copper preferred)
☐ Current carrying capacity depends on the Model selected and should be such that the AC cable can carry the full current of the AC supply and the Backup output:

Example for 5kW inverter model (S5/B5)
AC Supply Max. current = 21.7A + Backup (total up to 43.4A)
Backup Output Max. current: 21.7A

Note: Account for temperature derating and voltage drop/rise when selecting wire diameters. 110°C or higher rated cable derates slower as temperatures increase.
☐ External diameter:
typically 12mm to 18mm for grid connector,
typically 10mm to 14mm for backup connector
☐ Conductor cross-section area:
Grid conductor cross-section recommendation: 4-10mm^2
Backup conductor cross-section recommendation: 4-6mm^2
☐ Insulation stripping length
typically 16mm for grid connector,
typically 10mm for backup connector,
☐ Sheath stripping length
typically 45mm for grid connector,
typically 33mm for backup connector

DANGER

You must protect each inverter with an individual grid/backup circuit breaker in order to ensure that the inverter can be disconnected safely.

CAUTION

Residual-current monitoring unit

The inverter does not require an external residual-current device when operating.

If local regulations or a particular installation configuration requires the use of a residual-current device, or a Hybrid-coupled storage system with a big coupling capacity from the PV array and PV inverter, the following must be observed:

The inverter is compatible with type A residual-current devices with a rated residual current of 100mA or higher. Each inverter in the system must be connected to the utility grid via a separate residual-current device.

6.3.2. Select Suitable AC Circuit Breaker

The general requirements for the selection of circuit breakers are determined by standards and country-specific provisions. The following factors should be considered when selecting a suitable circuit breaker:
Factors influencing the current-carrying capacity of the cable: type of cable used, ambient temperature around the cable, type of cable routing, bundling of cables.
Other influencing factors: loop impedance, mutual heating of circuit breakers, ambient temperature at the circuit breaker, selectivity, type of connected device.
If these factors are ignored, it will increase the risk of the circuit breaker tripping under normal operating conditions.
Selecting Circuit Breakers for the AC supply and Backup output is dependent on the maximum current of the backup circuit and the inverter (if it is force-charged), the model of MCBs used and their derated current rating considering their maximum temperatures. Supplier Datasheets detail temperature derating for their MCBs. Ensure the MCBs used are appropriate for the current and the operating temperature.

AC connection recommendation for SMILE-G3-S3.6-INV

Description	Max. Current	Breaker Type	Recommended Cable Cross Section
Grid Side	32A	40A	6-10mm^2
Backup Side	16A	25A	4-6mm^2

AC connection recommendation for SMILE-G3-S5/B5-INV

Description	Max. Current	Breaker Type	Recommended Cable Cross Section
Grid Side	43.5A	50A	10mm^2
Backup Side	21.7A	32A	4-6mm^2

WARNING

Selecting suitable circuit breaker and copper conductor cross section

For SMILE-G3-S5/B5-INV, the MINIMUM allowable grid circuit breaker specification (if the unit is provided with full backup potential) is 50A, and the copper conductor cross section for grid connection should be at least 10mm^2. If the grid circuit breaker specification is 32A or 40A, you should use AlphaESS App or AlphaCloud to make the appropriate settings, such as setting the MCB rating or allowing no back-up mode. If such settings are not adjusted, it will increase the risk of the circuit breaker tripping under normal operating conditions.

6.3.3. Grid and Backup Connection

CAUTION

For Australia and New Zealand installation sites, the neutral cables of grid side and backup side must be connected together, otherwise backup output function will not work normally.

WARNING

Use AlphaESS App or AlphaCloud to select the current rating of the circuit breaker used to protect the AC cable connecting to the inverter.

The Battery System is programmed to limit the battery charge rate (from the grid) depending on the backup circuit current and the size of the MCB used. This avoids the risk of the backup circuit combining with a force-charge or VPP charge and pulling too much current through the grid-supply AC cable/MCB.

Note that an Automatic Transfer Switch can be used to bypass the battery AC cable and backup connection if preferred. In this case, the current on the Backup Output plug will be 0A until there is a power outage. This means that the MCB on the AC supply to the battery only needs to be sized for the maximum current rating of the inverter (i.e. 21.7A for a 5kW inverter).

The combined current of the Battery Grid-charge and the backup circuit will be limited to the current rating of the MCB less 2A (to account for the temperature derating of a typical MCB). Installers must advise AlphaESS if the MCB used has a steeper derating factor where the 2A buffer would not be sufficient.

Example: If a 32A MCB is used and the backup circuit is drawing 15A, any force charging of the battery will be limited to (32A-2A) – 15A = 15A. If the load on the backup circuits drops to 11A, the maximum grid-charge current would increase to 19A.

Where the wire diameter used for the AC connection to or from the battery inverter exceeds the maximum wire diameter for the grid connector plug below (e.g. if a long cable run is required and Voltage Rise Calculations require a wire of greater than $10mm^2$), use an intermediary connection point close to the battery to downsize the wire. Ensure that the short-run wire type is appropriate for the current and temperature (e.g. 180°C Silicone flex will carry much greater current than vs 90°C PVC) and use an intermediate MCB at the intermediary connection point if required.

The steps for connecting the grid connector are as follows:

1. Disconnect the PV switch, grid, backup and battery circuit breaker and secure them to prevent reconnection.
2. Dismantle the AC cable by 45mm.
3. Shorten L and N by 5mm each, so that the grounding conductor is 5mm longer. This ensures that the grounding conductor is the last to be pulled from the screw terminal in the event of tensile strain.
4. Strip the insulation of L, N and the grounding conductor 16mm.
5. If using fine stranded wire, fit L, N and PE with bootlace ferrules.
6. Unscrew the swivel nut from the threaded sleeve and pass the swivel nut and threaded sleeve over the AC cable.
7. Insert the three conductors into the screw terminals on the bush insert and tighten the screws using the torque 2.0 Nm with provided tool. Ensure that all conductors are securely in place in the screw terminals on the bush insert
8. Insert the threaded sleeve into the bush insert and hear the "click" sound. Screw the swivel nut onto the threaded sleeve.
9. Insert the grid connector plug into the socket for the grid connection, making sure to align the key on the grid socket with the keyway on the grid connector bush insert.

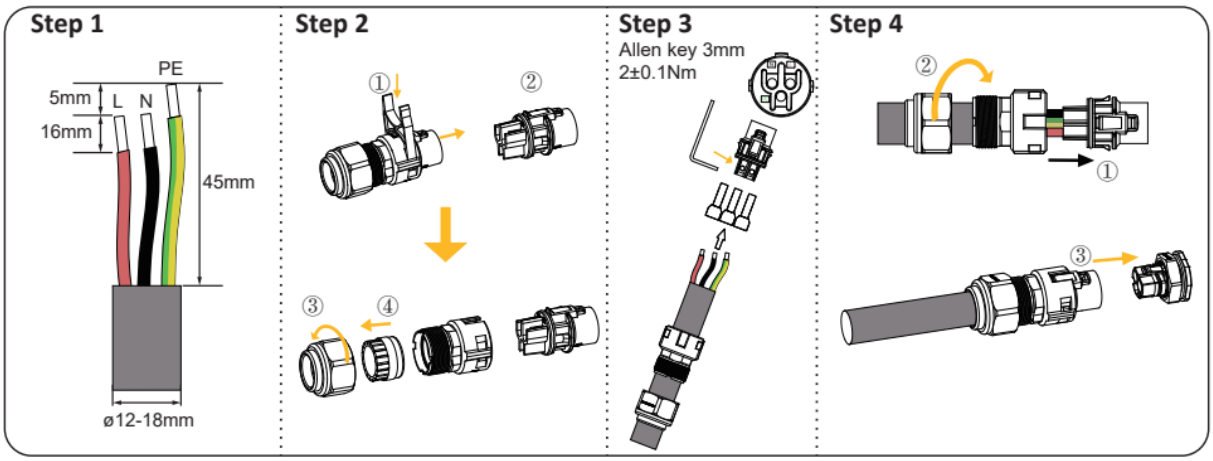

The steps for connecting the backup connector are as follows:

1. Disconnect the PV switch, grid, backup and battery circuit breaker and secure against reconnection.
2. Dismantle the AC cable by 33mm.
3. Shorten L and N by 3mm each, so that the grounding conductor is 3mm longer. This ensures that the grounding conductor is the last to be pulled from the screw terminal in the event of tensile strain.
4. Strip the insulation of L, N and the grounding conductor 10mm.
5. If using fine stranded wire, fit L, N and PE with bootlace ferrules.
6. Unscrew the swivel nut from the threaded sleeve and pass the swivel nut and threaded sleeve over the AC cable.
7. Insert the three conductors into the screw terminals on the bush insert and tighten the screws using the torque 1.2 Nm with provided tool. Ensure that all conductors are securely in place in the screw terminals on the bush insert
8. Insert the threaded sleeve into the bush insert and hear the "click" sound. Screw the swivel nut onto the threaded sleeve.
9. Insert the backup connector plug into the jack for the backup connection and screw tight. When doing so, making sure to align the key on the backup socket with the keyway on the backup connector bush insert.

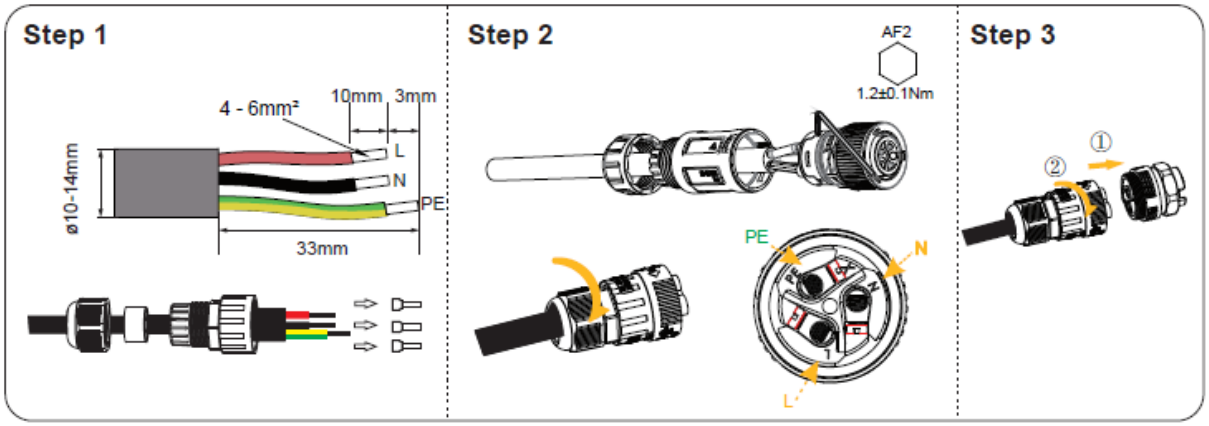

6.3.4. CT Connection & Meter Connection

Item	Current	Scenarios
CT	100A	CT
DTSU666-3*230V 5(80)A	80A	Three phase meter (without CT)
DTSU666-3*230V 100A/40mA	100A	Three phase meter (with CT)
DTSU666-3*230V 250A/50mA	250A	Three phase meter (with CT)

On the left-hand side of the Inverter, loosen the strain relief of the cable glands on the COM connection cover, and unscrew the 4 screws on the corners to reveal the Grid CT, PV CT and meter communication ports.

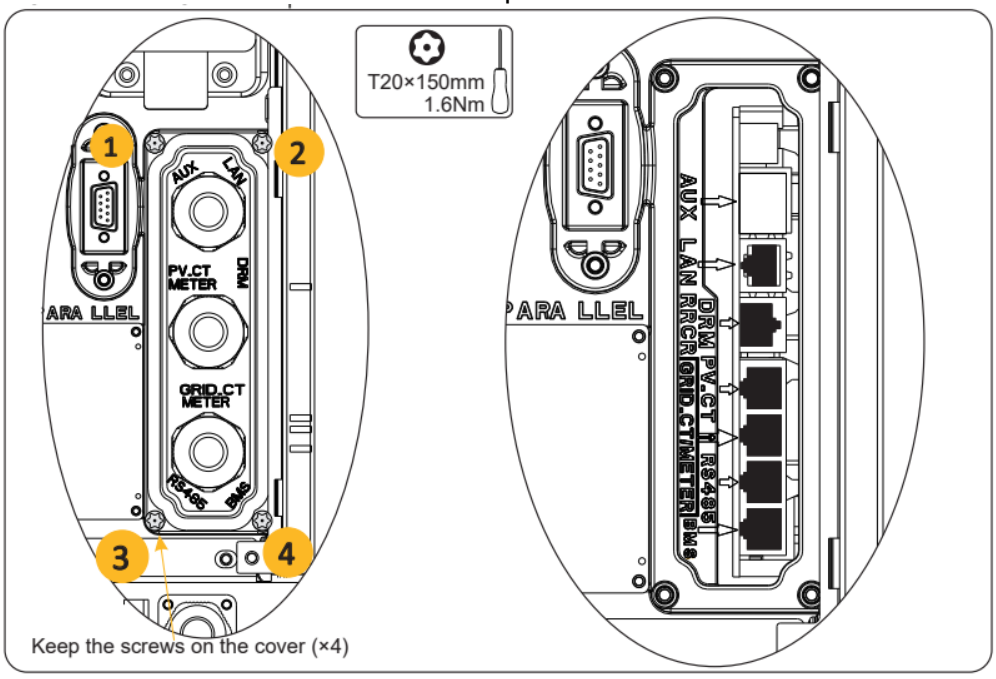

6.3.4.1 CT Connection

A Grid CT & cable is provided as an accessory for the SMILE-G3-INV Inverter.

For hybrid or AC-coupled storage system installations, an additional PV CT & PV CT cable must be purchased in order to measure the AC-coupled PV output.

Please remove CT(s) from the package before installing. The CTs must be connected to the CT cables provided. The CT and the CT Cables clip together via the connectors on each cable.

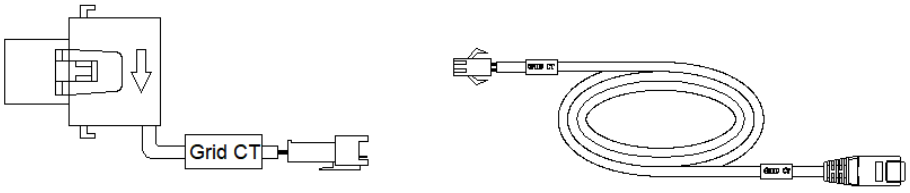

Step 1:

- Pass the CT cables through the cable gland of the COM connection cover but don't tighten the strain relief of the cable glands yet.
- Insert the RJ45 plugs into the relevant RJ45 sockets.

Step 2:

- Close the magnetic clamp of the Grid CT on the grid-supply cable. The ideal place for the Grid CT is between the Retail Meter and the Main Switch. If placed on either side of a Service Fuse, be very careful not to accidentally capture any Controlled Loads.
- The arrow on the casing of the Grid CT should point to the grid port of the energy storage inverter.
- In general, Controlled Loads should NOT be captured in the CT clamp.

Step 3:

- For hybrid or AC-coupled storage system application, close and latch the magnetic clamp of the PV CT on the AC output cable(s) of the installed PV inverter(s). The arrow on the magnetic buckle of the PV CT should point away from the PV inverter, again "toward the mains grid".
- If multiple PV inverters are installed, ensure the PV CT captures the combined output either by combining the PV inverter outputs into a single wire to clamp or by clamping multiple wires. If clamping multiple wires, ensure that the multiple wires are aligned such that the arrow on the CT does not point to any of the PV inverters. Failure to follow this instruction would result in one PV output being subtracted from the other in the CT clamp measurement calculations.

Step 4:

- Connect the CT cables to the Grid CT Port and PV CT Port on the energy storage inverter.
- Only secure the cover in place after the CTs/Meter communication cable, the BMS cable, and the LAN cable (if used) have been clipped into their respective ports.
- When securing the cover over the communication ports, tighten the cover in place and then lightly push the communication cable into the cover as you tighten the strain relief gland onto the cables. This will ensure the communication cables are well-seated in the RJ45 ports.

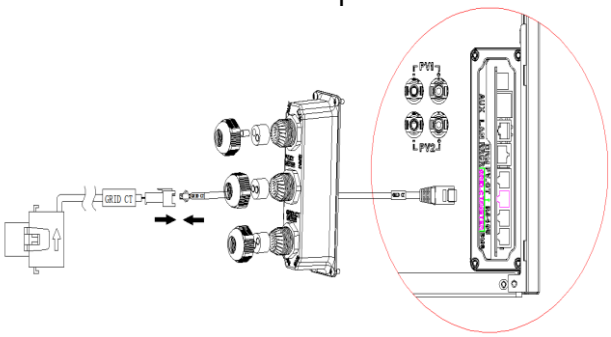

CAUTION

The CT cable marked Grid CT should be connected to the Grid CT, and the CT cable marked PV CT should be connected to the PV CT.

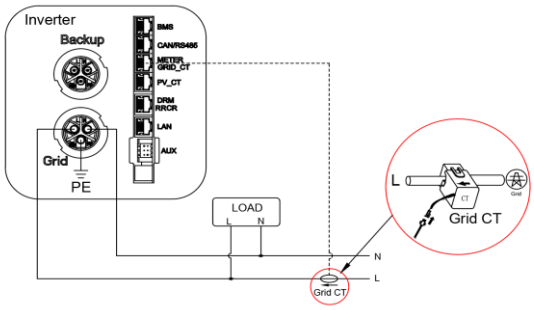

DC-Coupled Scctorage System

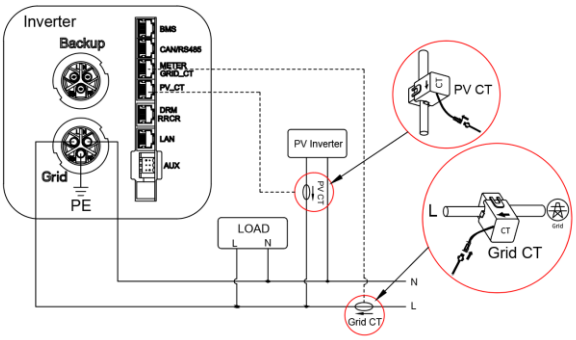

AC-Coupled and Hybrid-Coupled Storage System

6.3.4.2 Meter Connection

- Pass the meter cable through the cable gland of the COM connection cover but don't tighten the strain relief nut of the cable glands.
- Insert the RJ45 plug into the METER communication port.

The other steps for meter connection are as follows:

1. DSTU666-3*230V 5(80)A: Three-phase meter (without CT) connection

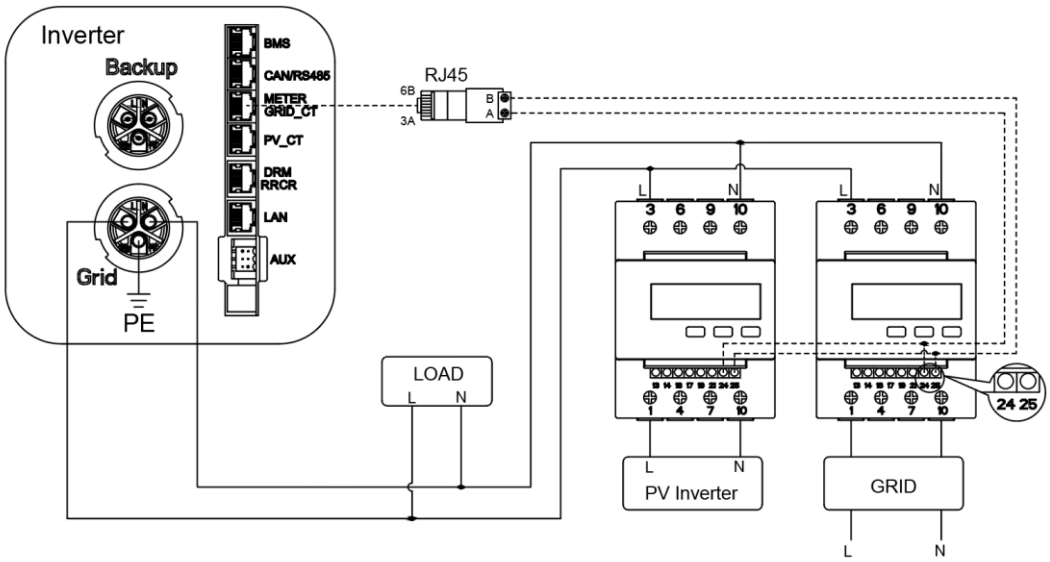

Wiring at single-phase feed-in

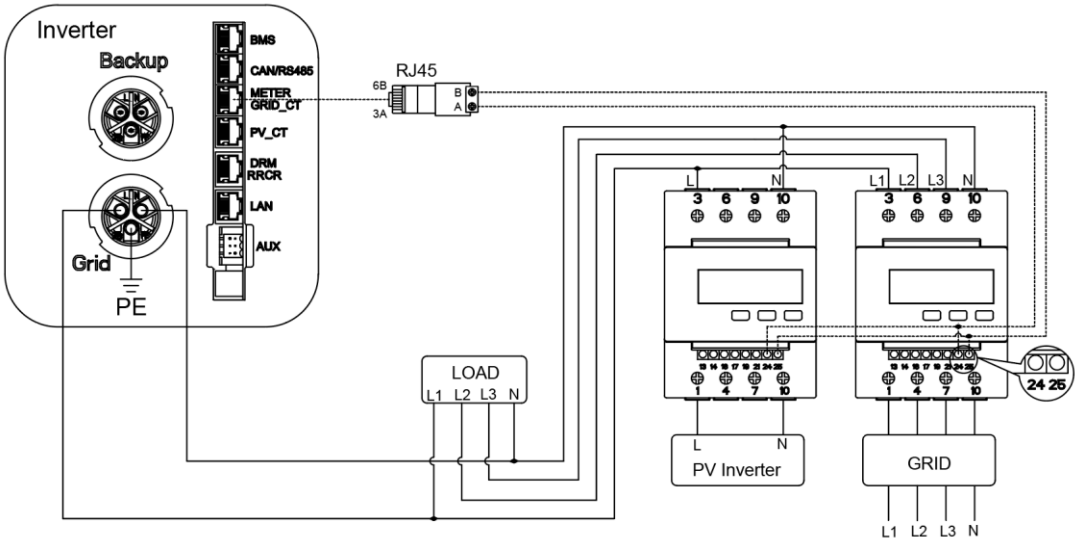

Wiring at three-phase feed-in

Meter communication cable requirements: two-core outdoor shielded twisted pair copper cable (flexible), conductor cross-section 0.5~1.5mm^2, wires terminal should be fitted with bootlace ferrules.

2. DSTU666-3*230V 100A/40mA, DTSU666-3*230V 250A/50mA: Three-phase meter (with CT) connection

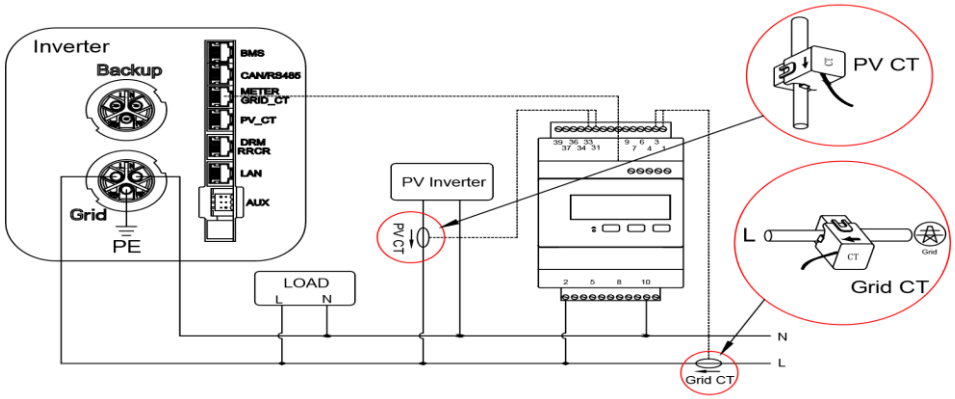

Wiring at single-phase feed-in

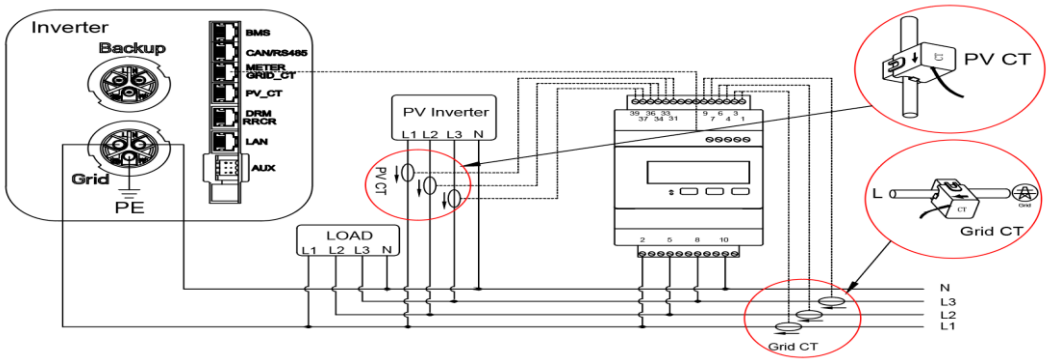

Wiring at three-phase feed-in

Meter communication cable requirements: standard network cable in the industry (recommended type: Cat5e, FTP, UV-resistant for outdoor use).

The connections are marked clearly on the meter.

Wiring location description of Chint three-phase meter (with CT)

Grid CT	PV CT	GRID
1--------IA* (White)	31--------IA* (White)	2----------L1
3--------IA (Blue)	33--------I*A (Blue)	5----------L2
4--------IB* (White)	34--------IB* (White)	8----------L3
6--------IB (Blue)	36--------IB (Blue)	10-------- N
7--------IC* (White)	37--------IC* (White)	
9--------IC (Blue)	39--------IC (Blue)	

CT Group	Grid-> Load								PV->Load					
CT Phase	IA*	IA	IB*	IB	IC*	IC			IA*	IA	IB*	IB	IC*	IC
Terminal	1	3	4	6	7	9	X	X	31	33	34	36	37	39
Colour	White	Blue	White	Blue	White	Blue			White	Blue	White	Blue	White	Blue

NOTICE

Be VERY careful when wiring or checking these connections because the connections appear reversed when the meter is secured in place on the Din Rail. Always physically check the label on the meter when wiring any CTs or grid reference wires.

6.3.4.3 Meter Configuration

If connecting Chint DTSU666 meters without CTs, two meters are required if there is any AC-coupled PV; one for the Grid Import/Export and one for the AC-coupled PV measurements. Installers will need to purchase the second meter.

Model	Grid Meter Address	PV Meter Address
DTSU666-3*230V 5(80)A (without CT)	1	2
DTSU666-3*230V 100A/40mA (with CT)	1	N/A
DTSU666-3*230V 250A/50mA (with CT)	1	N/A

1. DTSU666-3*230V 5(80)A: Three-phase meter (without CT)

When the meter is used as Grid meter, please follow the steps below to complete the address setting.

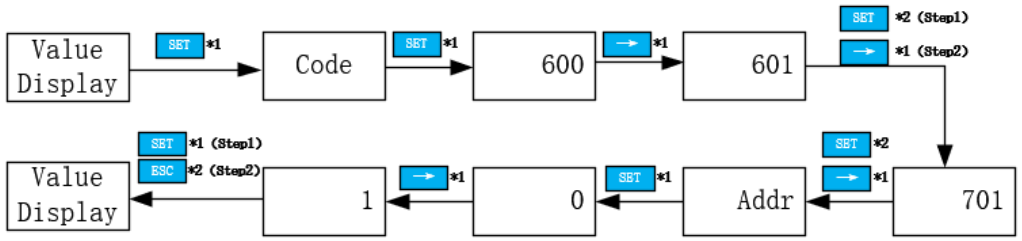

When the meter is used as PV meter, please follow the steps below to complete the address setting.

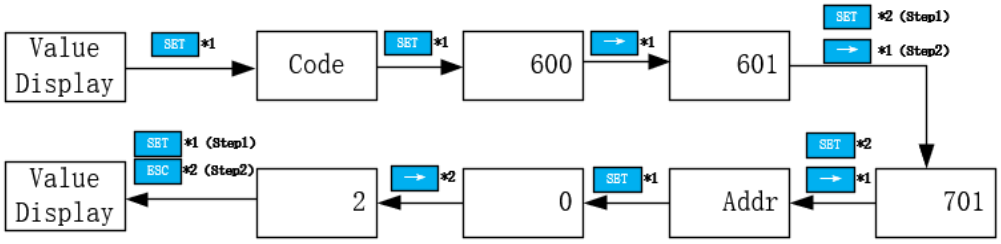

2. DTSU666-3*230V 100A/40mA, DTSU666-3*230V 250A/50mA: Three-phase meter (with CT)

Please follow the steps below to complete the address setting.

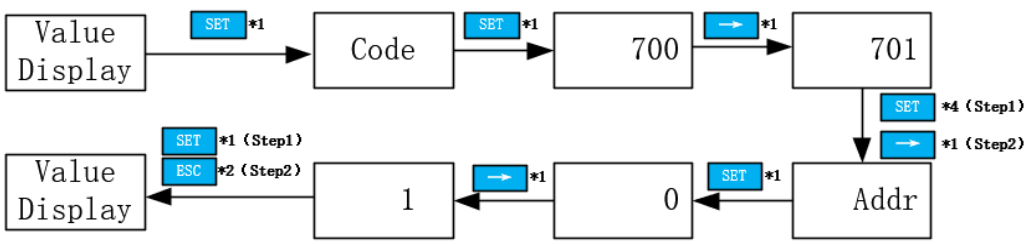

Meter Setting on AlphaCloud

Step 1:

When the system work mode is selected as DC, click the button under the "Grid Meter" to turn the "Meter" icon orange.

When the system work mode is selected as AC or Hybrid, click the buttons under the "Grid Meter" and "PV side meter" to turn the "Meter" icon orange.

Step 2:

Click "Save" and wait a few minutes to refresh the page.

When the "Meter Model" displays DTSU666 model, the setting is successful.

> **CAUTION**
>
> Do not tick the CT box to modify the CT ratio.

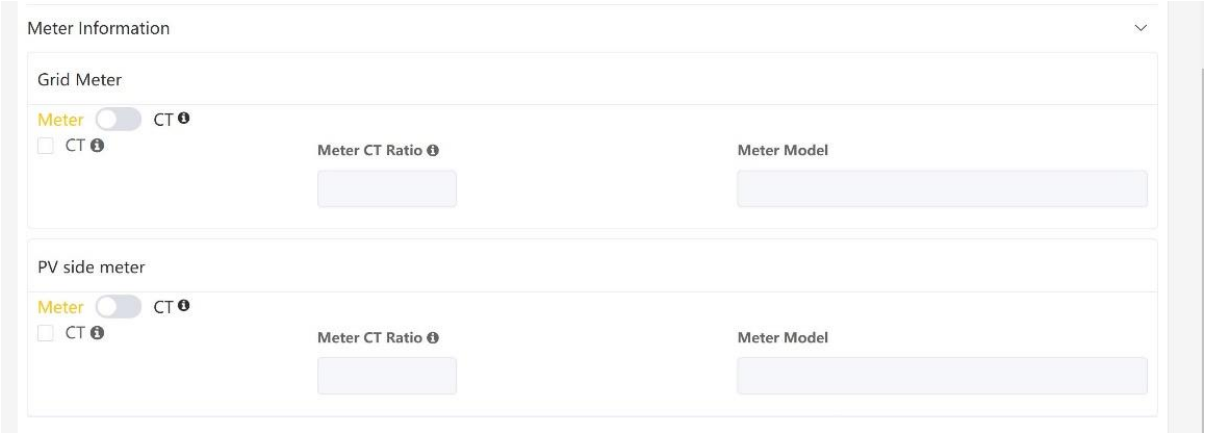

Meter Setting on AlphaESS App

Step 1:

When the system work mode is selected as DC, only tick "Meter" icon on the right of the "Grid Meter".

When the system work mode is selected as AC or Hybrid, both tick "Meter" icon on the right of the "Grid Meter" and "PV side meter".

Step 2:

Click "Submit" and enter the "System information" page to check the meter model. When the "Meter Model" displays DTSU666 model, the setting is successful.

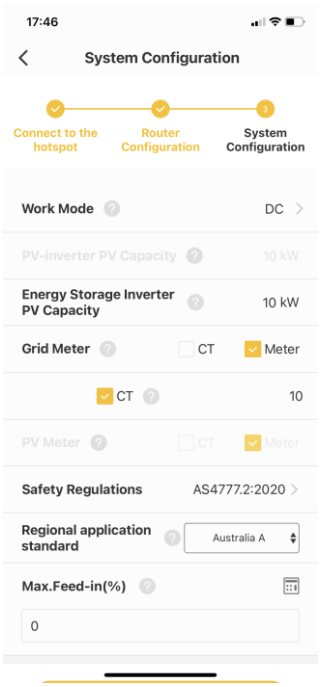

> **CAUTION**
>
> Do not tick the CT box to modify the CT ratio.

6.4. PV Connection

DANGER

Danger to life due to electric shock if live components or DC cables are touched

The DC cables connected to a battery or a PV module may be live. Touching live DC cables can result in serious injury or even death due to electric shock. To avoid this danger:

- Disconnect the inverter and battery from voltage sources and make sure it cannot be reconnected before working on the device.
- Do not touch non-insulated parts or cables.
- Do not disconnect the DC connectors under load.
- Wear suitable personal protective equipment for all work on the product.
- Observe all safety information in this document.

NOTICE

Destruction of the inverter due to overvoltage

If the open-circuit voltage of the PV modules exceeds the maximum input voltage of the inverter, the inverter can be destroyed due to overvoltage.

- If the open-circuit voltage of the PV modules exceeds the maximum input voltage of the inverter, do not connect any strings to the inverter and check the design of the PV system.

NOTICE

Damage to the product due to ground fault on DC side during operation

Due to the transformerless topology of the inverter, the occurrence of ground faults on DC side during operation can lead to irreparable damage. Damages to the inverter due to a faulty or damaged DC installation are not covered by warranty. The inverter is equipped with a protective device that checks whether a ground fault is present during the starting sequence. The inverter is not protected during operation.

- Ensure that the DC installation is carried out correctly and no ground fault occurs during operation.

NOTICE

Damage to the inverter due to sand, dust and moisture ingress if the PV inputs are not closed

The inverteris only properly sealed when all unused PV inputs are closed with sealing plugs. Sand, dust and moisture penetration can damage the inverter and impair its functionality.

- Seal all unused PV inputs using sealing plugs.

Please ensure the follows before connecting PV strings to the inverter:

- Make sure the open voltage of the PV strings will not exceed the max. DC input voltage (580Vdc). Violating this condition will void the warranty.
- Make sure the polarity of the PV connectors is correct.
- Make sure the PV-switch, breakers of battery, AC-BACKUP and AC-Grid are all isolated/in their "off" states.
- Make sure the PV resistor to ground is higher than 200K Ohms.

The inverter uses the Vaconn D4 PV connectors. Please follow the picture below to assemble the PV connectors. PV conductor cross section requirements: 4~6 mm^2.

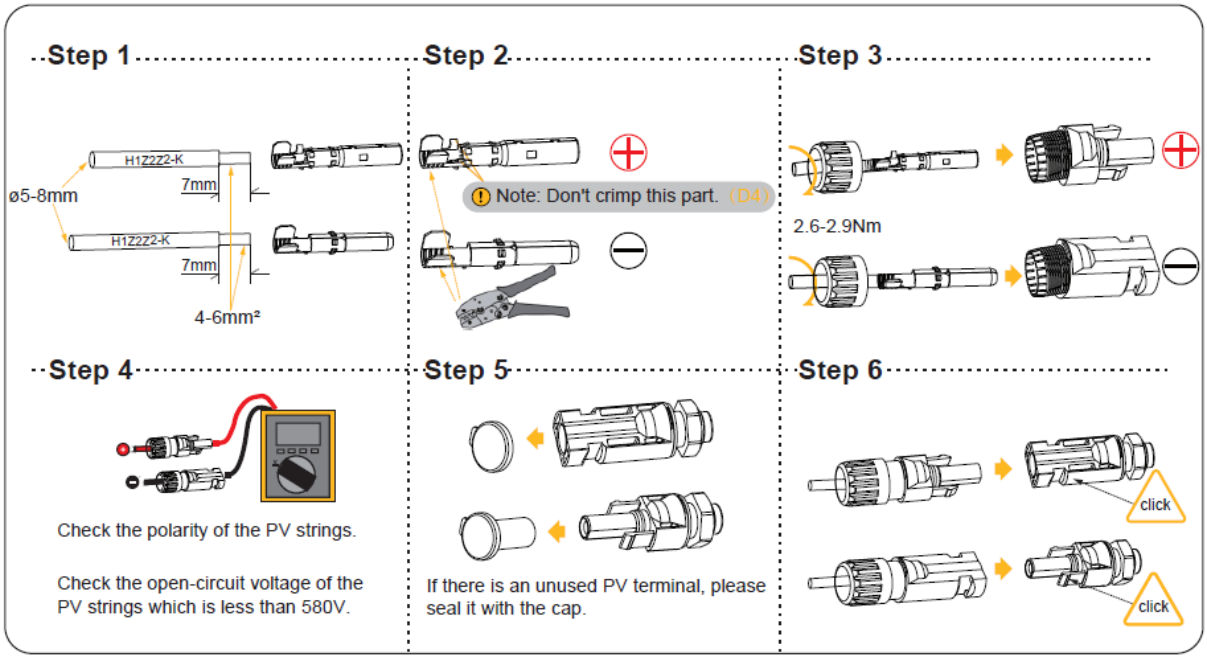

6.5. Electrical Connection between the Inverter and Battery

6.5.1. Communication Connection between the INV and BAT

Communication cable connection between inverter and parallel batteries SMILE-G3-BAT-8.2P/10.1P:

a. Remove the battery communication cable from the battery packaging.
b. Pass the battery communication cable (BMS communication cable) through the cable gland of the COM connection cover of SMILE-G3 single phase energy storage inverter. Do not tighten the strain relief nut of the cable glands yet.
c. Insert the RJ45 plug into the BMS communication port on the Inverter communication ports labelled “BMS”.
d. The battery communication ports of SMILE-G3-BAT-10.1P/8.2P are on the left side.
e. Disassemble the battery communication connector components, pass the components through the communication cable, insert the RJ45 plugs into the BMS communication port, and secure the communication connector.
f. Only secure the covers in place after the CTs/Meter communication cable, the BMS cable and the LAN cable (if used) have been clipped into their respective ports.
g. When securing the cover over the communication ports, tighten the cover in place and then lightly push the communication cables into the cover as you tighten the strain relief gland onto the cables. This will ensure the communication cables are well-seated in the RJ45 ports.
h. Similarly secure the cable, gland and COM connection cover over the battery BMS connection.

Communication cable connection between the energy storage inverter and series batteries:

a. Pass the battery communication cable of the upper battery through the cable gland of the COM connection cover of inverter. Do not tighten the strain relief nuts of the cable gland.
b. Insert the RJ45 plug to the BMS communication port of the energy storage inverter.

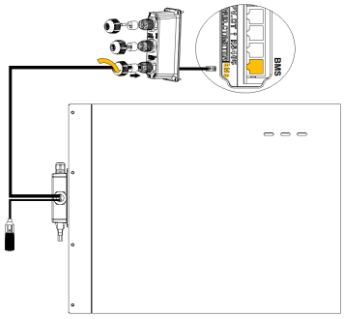

6.5.2. System Connection between INV and BAT

DANGER

Danger to life due to short circuit of the battery

Touching the short-circuit connection of the battery can result in significant injuries or even death due to electric shock and massive energy release.

- Switch off the battery breaker which is located at the left side of the battery.
- Please connect both ends of one battery power cable completely before connecting the next power cable to avoid short-circuiting of the positive and negative battery power cables.

Power cables connection between SMILE-G3 single phase energy storage inverter and parallel battery SMILE-G3-BAT-8.2P/10.1P:

a. Remove the battery power cables from the battery packaging.
Please pay attention to the cable type.

No.	Picture	Description
1	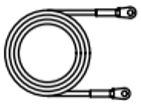	Red power cable: connect BAT positive of parallel battery and the BAT positive of inverter, connect BAT positive terminals of parallel batteries.
2	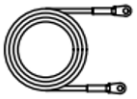	Black power cable: connect BAT negative of parallel battery and the BAT negative of inverter, connect BAT negative terminals of parallel batteries.
3		The battery communication cable: connect the BMS communication ports of the inverter and parallel battery, connect the BMS communication ports of the parallel batteries.

b. Unscrew the threaded sleeves from the battery power connectors of the inverter and the battery.
c. Connect the battery power cables to the SMILE-G3 single phase inverter and parallel battery SMILE-G3-BAT-8.2P/10.1P; operating steps are as follows:

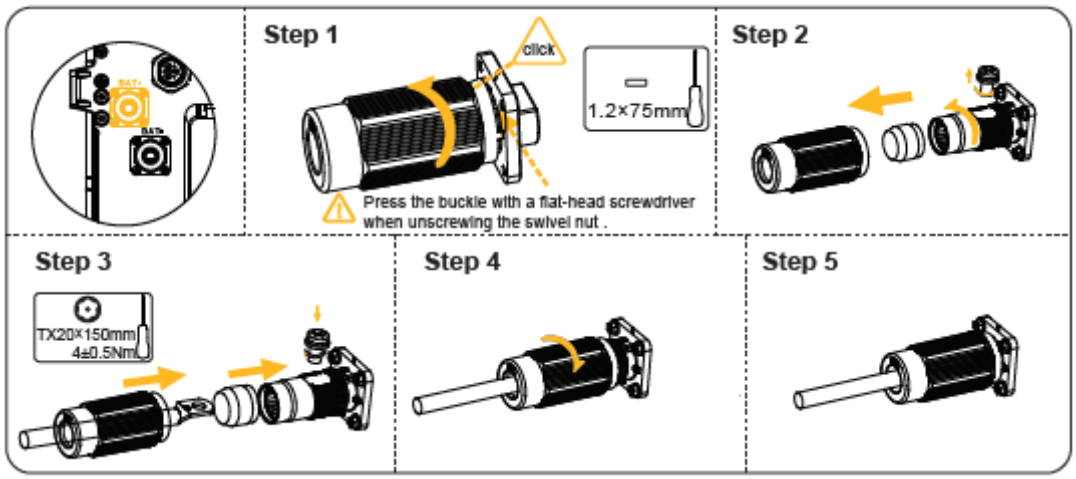

Electrical connection diagram between SMILE-G3 single phase inverter and the first parallel battery:

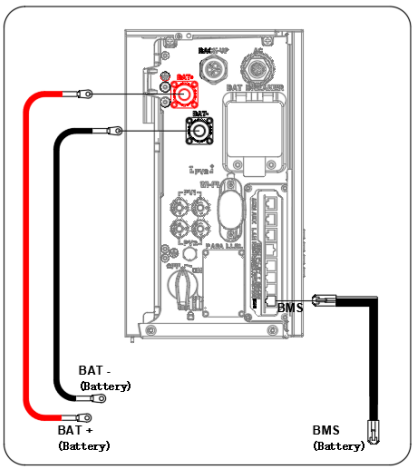

Inverter side

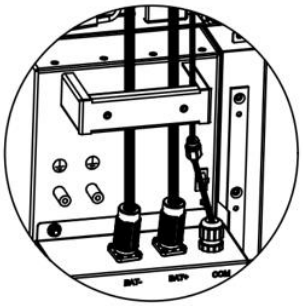

SMILE-G3-BAT-8.2P

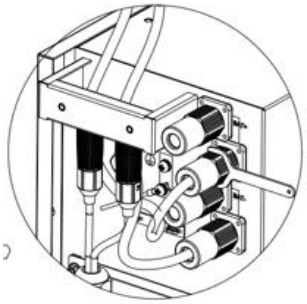

SMILE-G3-BAT-10.1P

For electrical connection between multiple parallel batteries SMILE-G3-BAT-8.2P/10.1P, please follow the steps below.

a. Remove battery power cables and communication cable from battery packaging.
b. Connect the power cables from battery 2 to battery 1.
   Connect the BMS communication cables from battery 2 to battery 1.
   When installing more batteries, repeat this electrical connection step.
c. For grounding connection between batteries, please refer to Chapter 6.2 Grounding Connecting.

You can install extra batteries up to 6 batteries in a system. Please install extra batteries by side. Batteries can be stacked up to two batteries per column.

NOTICE

Connect the cables between the multiple parallel batteries, route them from the rear side of the battery for two batteries stacking installation.

Electrical connection diagram between multiple parallel batteries SMILE-G3-BAT-8.2P:

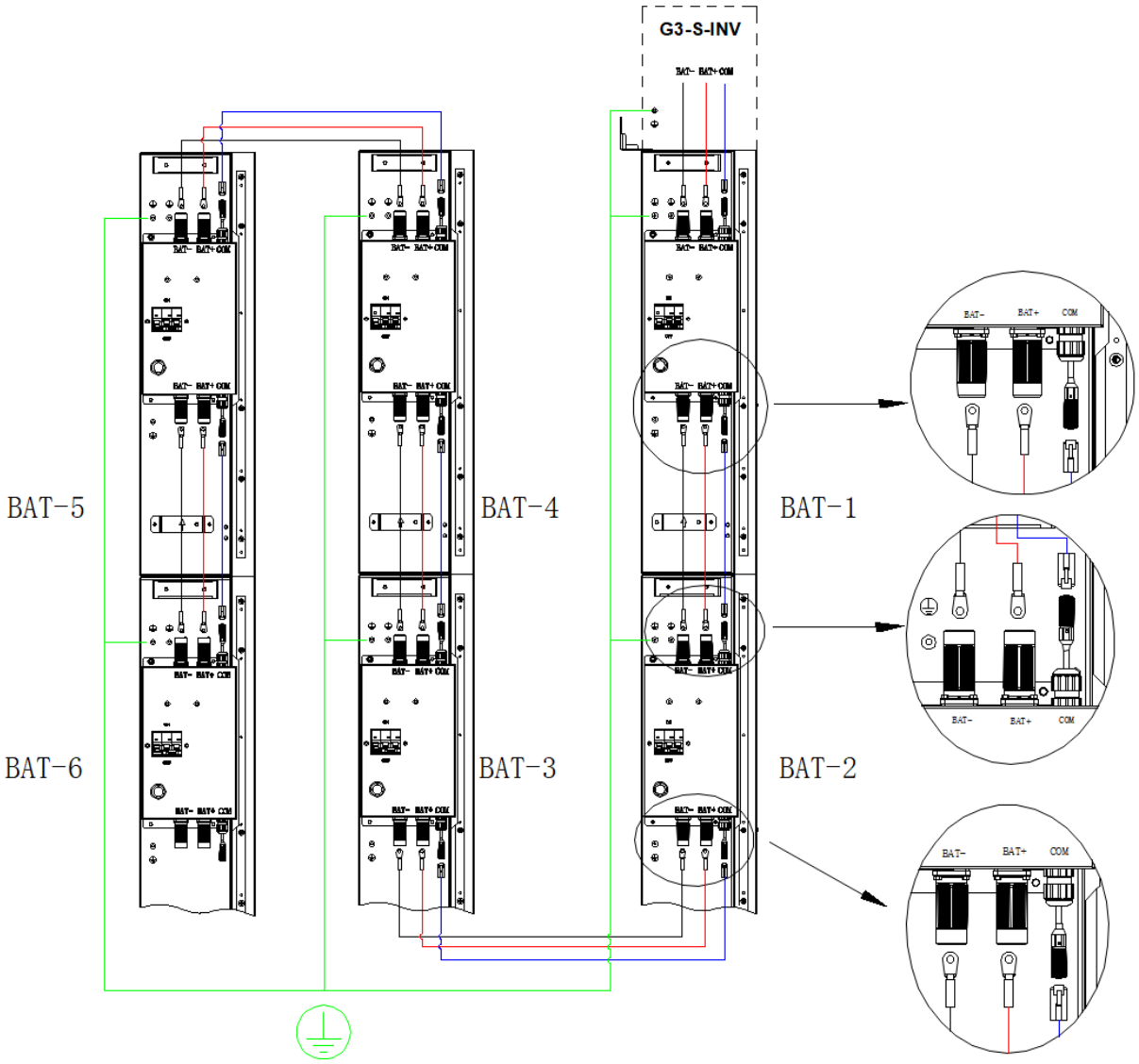

Remove the excess terminal resistor

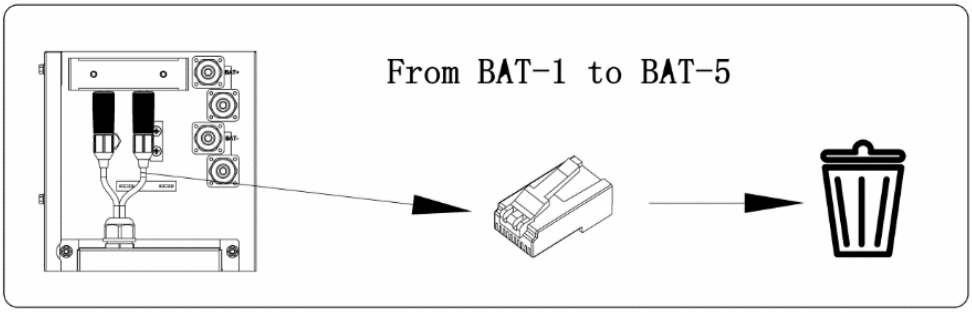

Electrical connection diagram between multiple parallel batteries SMILE-G3-BAT-10.1P:

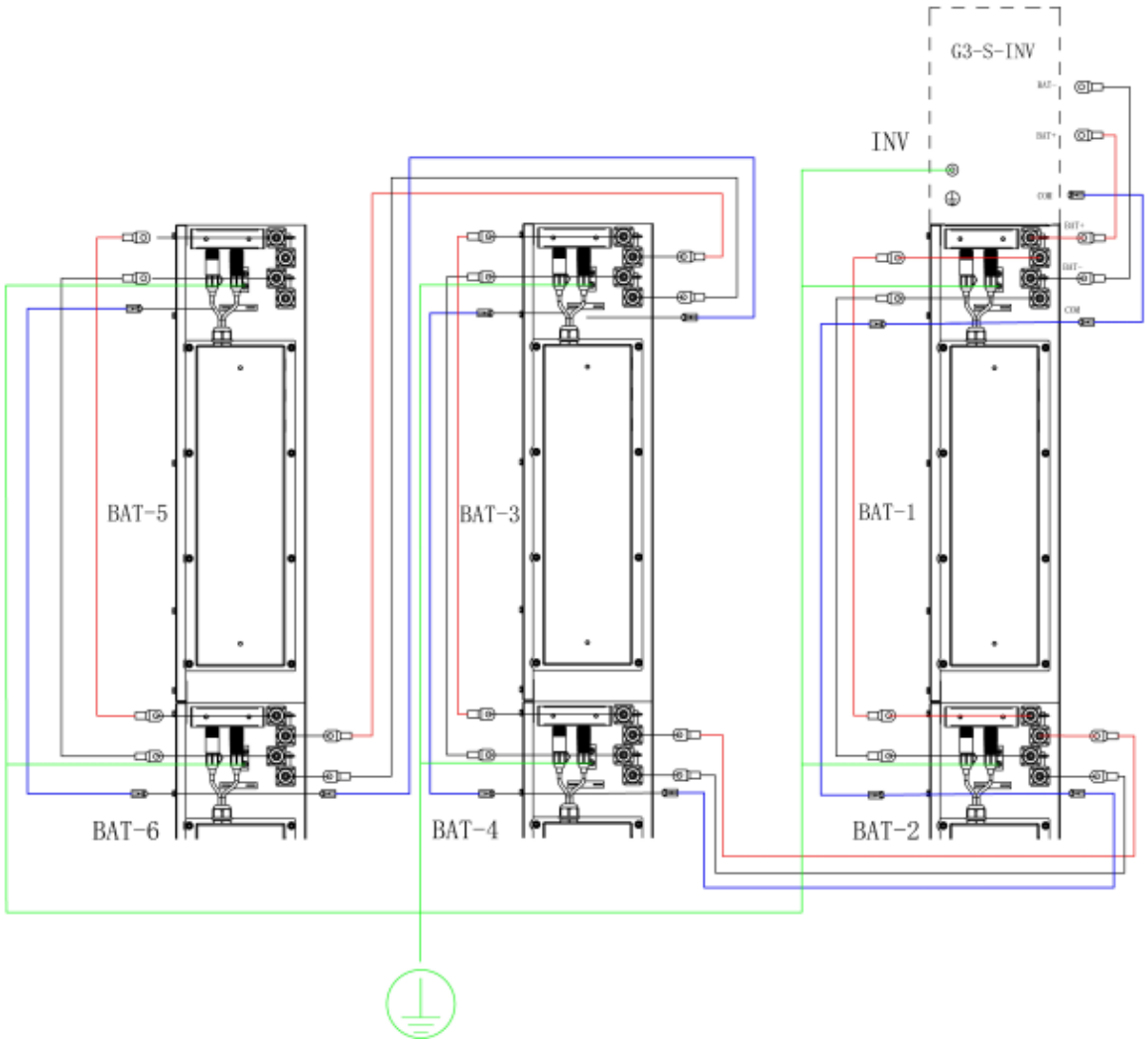

Remove the excess terminal resistor

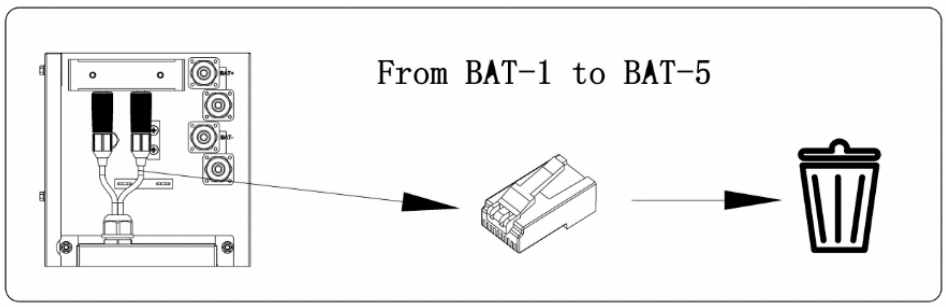

Power cables connection between the Inverter and series batteries (max. 4):
a. Remove the battery power cables from the inverter packaging.
b. Take down the protective caps from the battery power connectors of the batteries. Unscrew the threaded sleeves from the power connectors of the inverter.
c. Connect the battery cables to the inverter and series batteries.

Please pay attention to the cable type, there is four kinds of cables.

No.	Picture	Description
1		The shortest power cable connect BAT main positive of series battery and the BAT positive of inverter
2	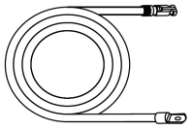	The longest power cable connect BAT main negative of series battery and the BAT negative of inverter
3	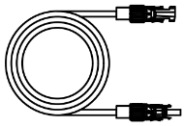	The medium length power cable connect BAT negative of the bottom battery of first column series battery and BAT positive of the top battery of second column series battery
4	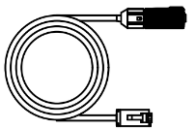	The battery comminucation cable connect the lower comminucation connector of the bottom battery of first column series battery and the upper comminucation connector of the top battery of second column series battery

DANGER

Danger to life due to short circuit of the battery

Touching the short-circuit connection of the battery can result in significant injuries or even death due to electric shock and massive energy release.

- Switch off the battery breaker located on the lower left of the battery.
- Connect the upper connector of the lower battery to the lower connector of the upper battery. Otherwise, the battery may short-circuit.

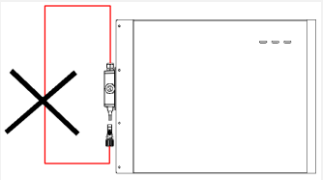

Connect the battery power cables to the SMILE-G3 single phase inverter and series battery, operating steps as follows:

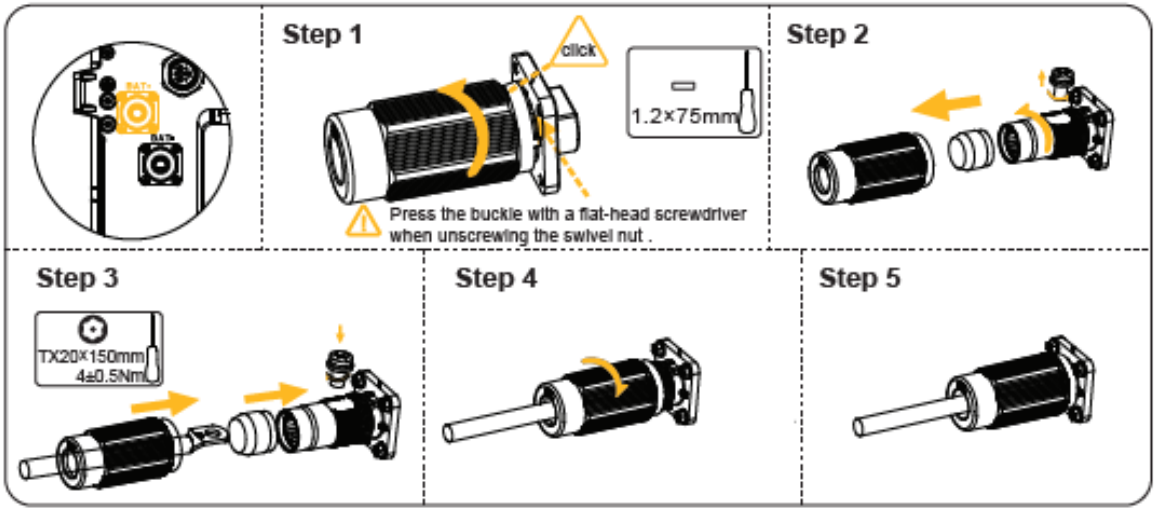

You can install up to 4 series batteries in a system. The electrical connection diagram for SMILE-G3 single phase inverter and different number of series batteries is as follows:

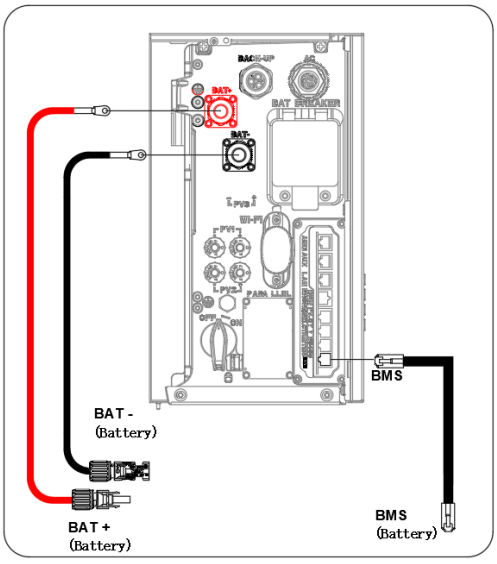

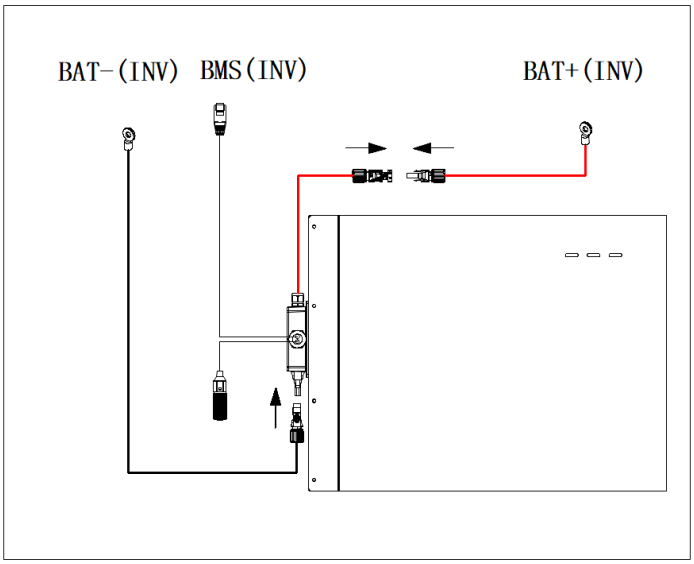

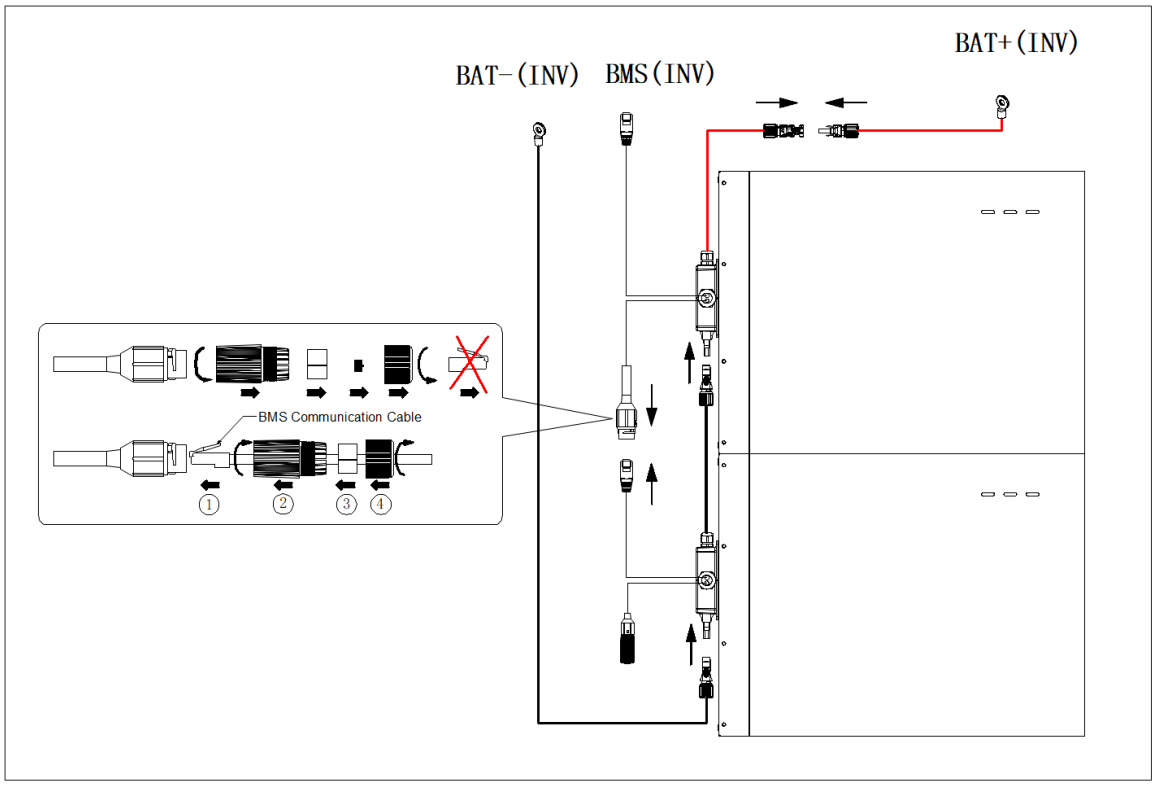
BAT+(INV)
BAT−(INV)
BMS(INV)
BMS Communication Cable
①
②
③
④

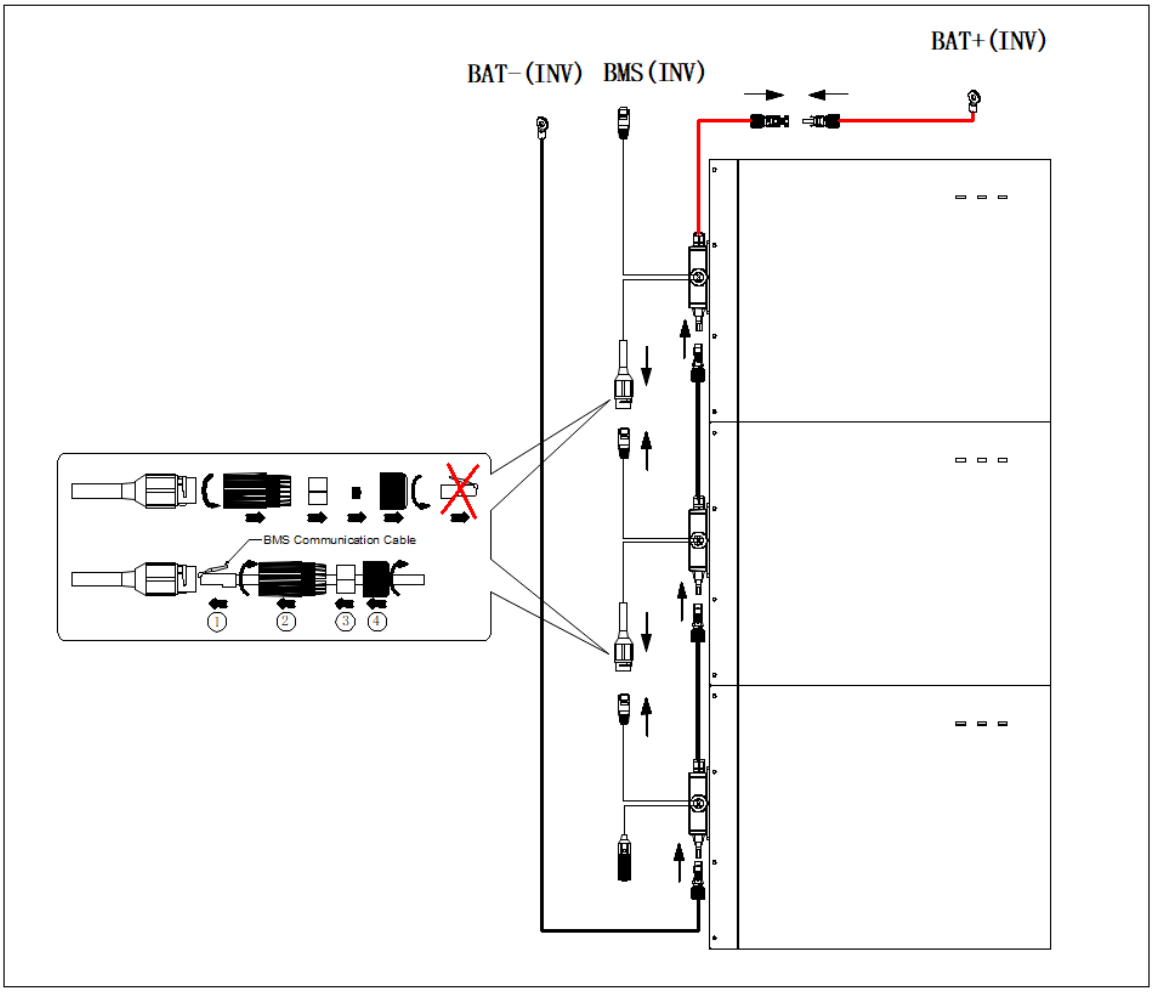
BAT+(INV)
BAT−(INV)
BMS(INV)
BMS Communication Cable
①
②
③
④

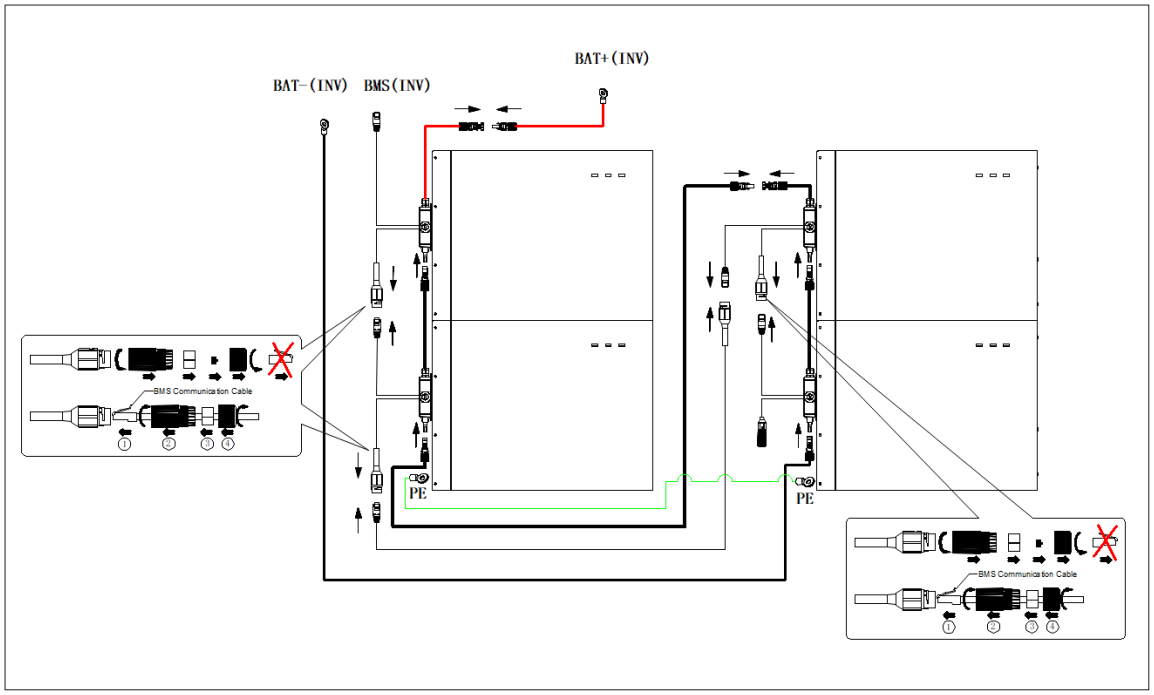

Accessory cables for distanced horizontal series batteries expansion should be purchased additionally.

6.6. Communication Connection with Inverter

For other communication (AUX, LAN, RRCR, DRM, Meter, RS485) connection, please follow the below steps.

1. Loosen the cable glands on the COM connection cover of the inverter, and then unscrew the 4 screws on the COM connection cover.

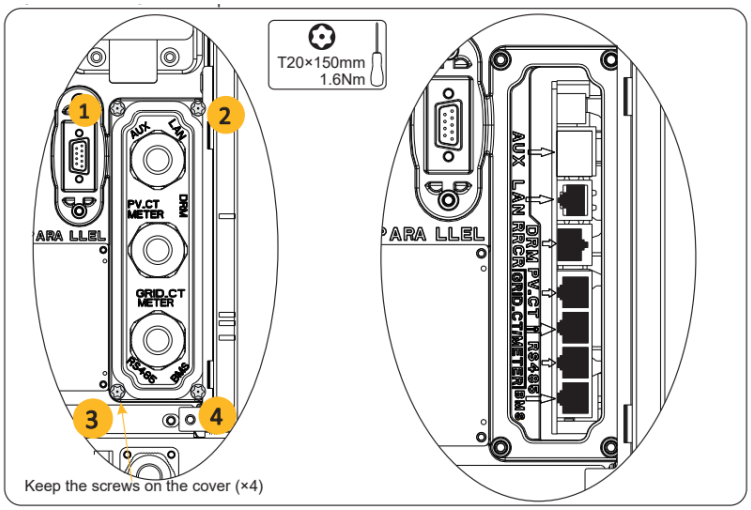

2. Pass the communication cables through the cable glands of the COM connection cover. Do not tighten the strain relief nuts of the cable glands yet.

Insert the RJ45 plugs to the relative RJ45 sockets.

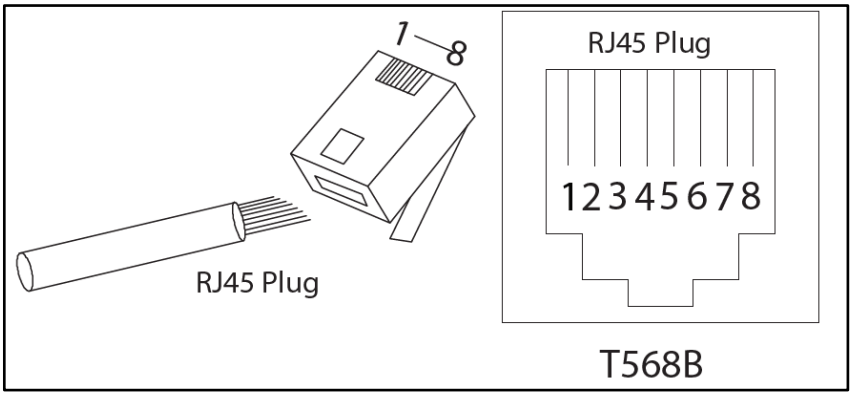

1) For meter wiring, refer to Chapter 6.3.4.1 for Meter Wiring.
2) If DRM support is specified, the system may only be used in conjunction with a Demand Response Enabling Device (DRED). This ensures that the system implements the commands from the grid operator for active power limitation at all times. The system and the Demand Response Enabling Device (DRED) must be connected in the same network.
   Only DRM0 is available for SMILE-G3 inverter.
3) Take out 1 pcs 6 pin terminal block for AUX connection.
   For AUX position definition, please refer to the AUX wiring documentation.

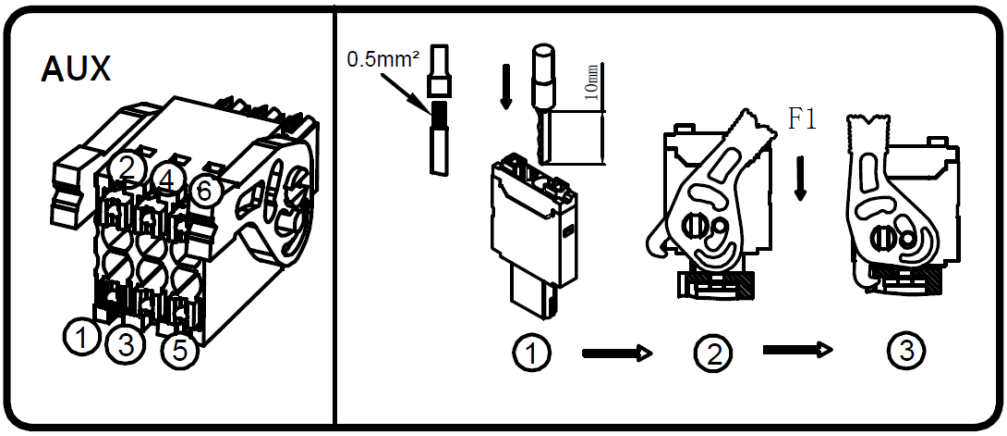

When an emergent situation occurs, such as fire, the end user can manually press the EPO (Emergency Power Off) button to shut down the inverter and switch off the battery (except for the PV array). End users or installer should prepare the external EPO.

AUX cable requirements: outdoor shielded copper cable (flexible), recommended conductor cross-section 0.5mm^2, conductor ends should be fitted with bootlace ferrules.

To disconnect the AUX connection, rotate the handles on both sides clockwise, unplug the AUX connector, insert a screwdriver (blade width: 1.2 mm) into the relative connection position side and unplug the conductor.

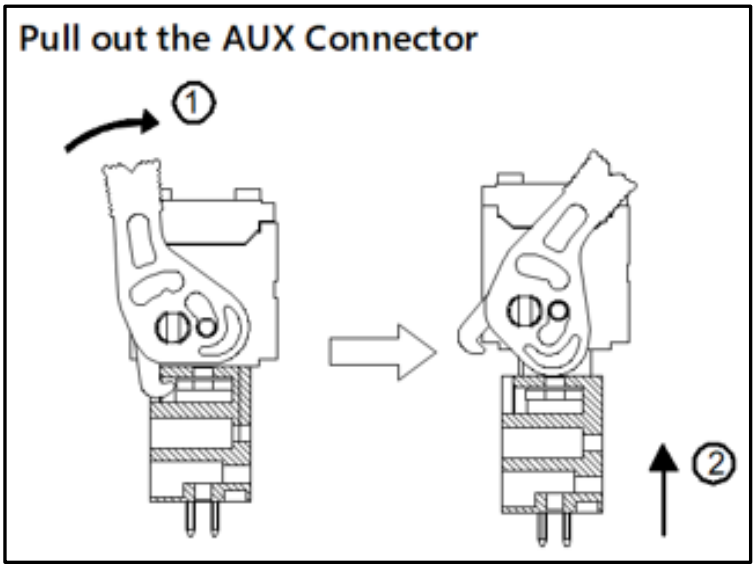

3. Place the COM connection cover against the inverter enclosure and tighten the 4 screws. When securing the cover over the communication ports, tighten the cover in place and then lightly push the communication cables into the cover as you tighten the strain relief gland onto the cables. This will ensure the communication cables are well-seated in the RJ45 ports.
The pin definition of the communication ports:

ITIM \ No.	1	2	3	4	5	6	7	8
BMS	NC	RS485_A4	NC	CAN1_H	CAN1_L	NC	RS485_B4	NC
RS485	12V	NC	GND	RS485_B5	RS485_A5	NC	NC	NC
GRID_CT/METER	GRID_CT-	GRID_CT+	RS485_A7	NC	NC	RS485_B7	NC	NC
PV_CT	PV_CT-	PV_CT+	RS485_A7	NC	NC	RS485_B7	NC	NC
RRCR	K1	K2	K3	K4	3.3V			
DRM	DRED1/5	DRED2/6	DRED3/7	DRED4/8	REFGEN/0	COMLOAD/0		
AUX	DO1_NO	DO1_COM	DO1_NC	DI_NEGATIVE	DI_POSITIVE	GND		

6.7. Mount Covers of the Battery and Inverter

After finishing electrical connection of energy storage system, please follow the steps below:

1. Mount the cable cover of battery

Mount the cable cover of battery SMILE-G3-BAT-8.2P

a. Cut a cable hole based on the cabling routing, and route the cables through the cable hole.

b. Secure the cable cover to the battery housing (tool: T20 screwdriver, torque: 2.0Nm).

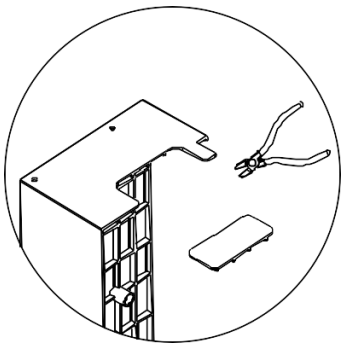

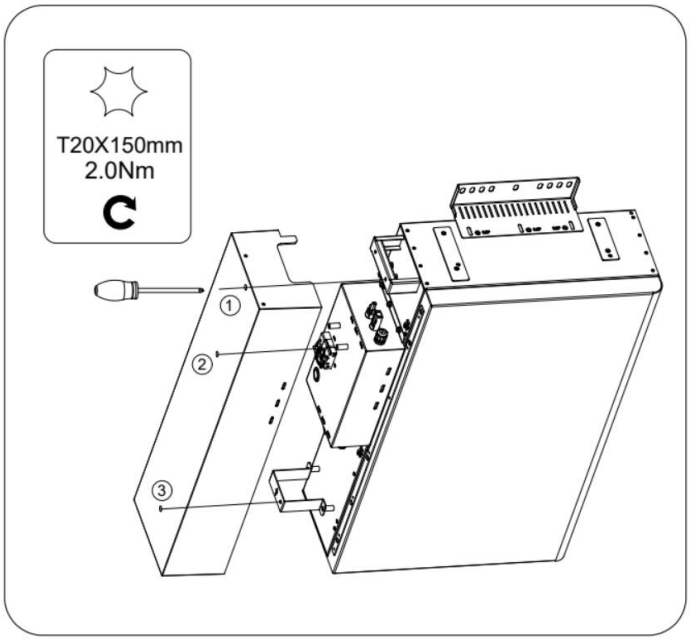

Mount the left cable cover of the battery SMILE-G3-BAT-10.1P, then install the right breaker cover, detailed steps are as follows:

a. Cut a cable hole based on the cabling routing, and route the cables through the cable hole.

b. Secure the cable cover to the battery housing (tool: T20 screwdriver, torque: 2.0Nm).

c. Slantly place the breaker cover into the rectangular hole and flatten it with housing surface.

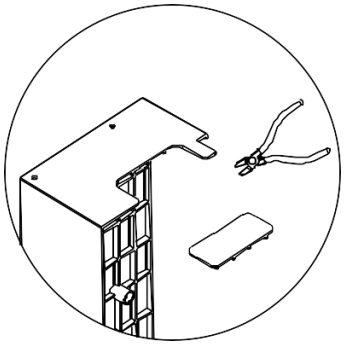

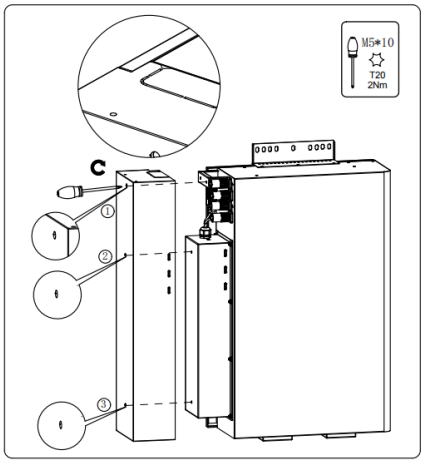

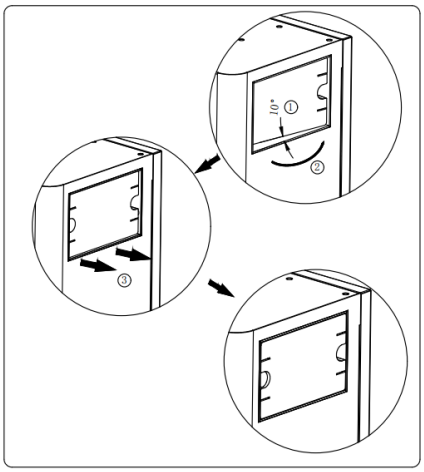

Mount the cable cover of the battery SMILE-G3-BAT-3.6S/4.0S
a. Cut a cable hole based on the cabling routing, and route the cables through the cable hole.
b. Align the top surface of the cable cover with the top surface of the battery housing.
c. Align the protrusions on the right side of the cable cover with the slots on the left side of the battery's front cover.
d. Right push the cable cover to the battery housing till hear the "click" sound.

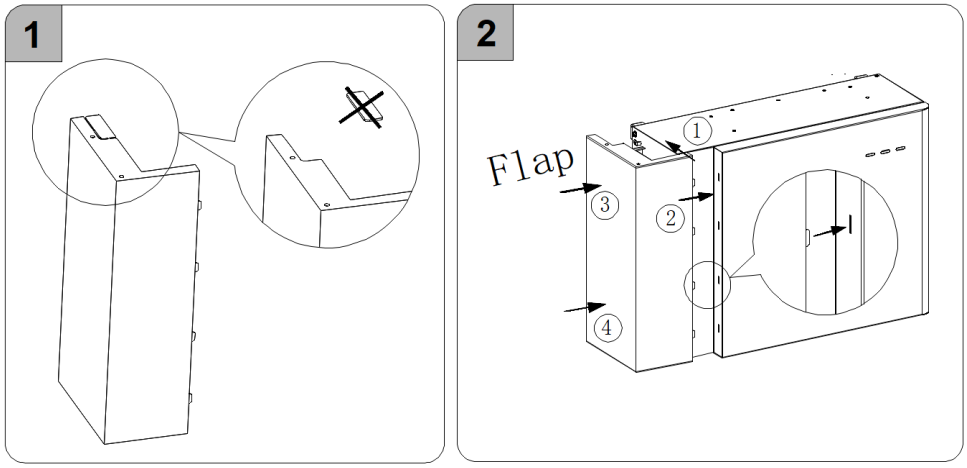

Disassemble the cable cover of the battery SMILE-G3-BAT-3.6S/4.0S

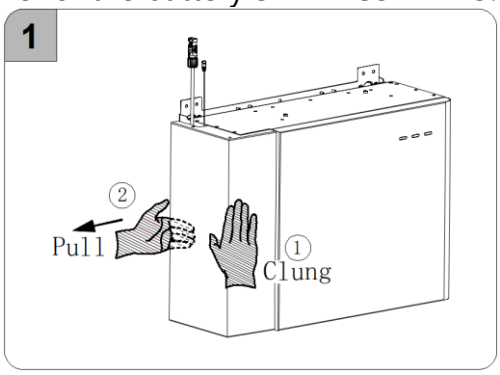

Mount the cable cover of the battery SMILE-G3-BAT-3.8S
a. Cut a cable hole based on the cabling routing, and route the cables through the cable hole.
b. Tighten the two support studs for battery cable cover to the battery housing (tool: SW8 hexagon sleeve, torque: 2.5Nm).
c. Align the four small protrusions on the right side of the cable cover with the slots on the left side of the battery's front cover, push the cable cover towards the right.
d. Secure the cable cover to the battery housing (tool: T20 screwdriver, torque: 1.5Nm).

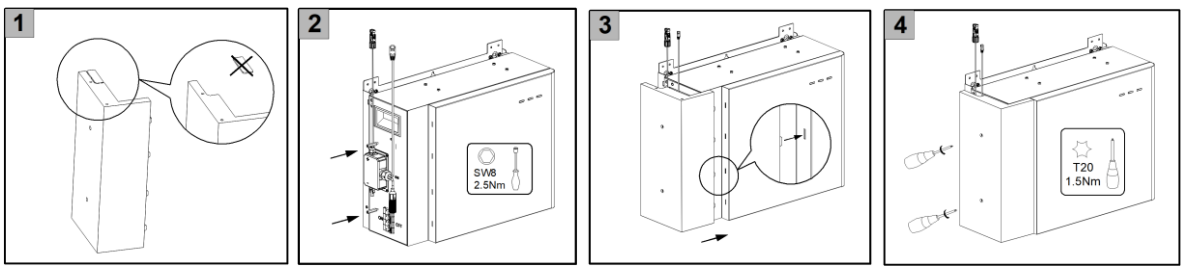

2. Mount the covers of the inverter

Attach the top cover to the inverter. Place the top cover on top of the inverter and slide it forward, the three side screws of the top cover should align with the inverter mounting threaded holes, secure the top cover to the inverter (tool: PH2 screwdriver, torque: 1.6Nm).

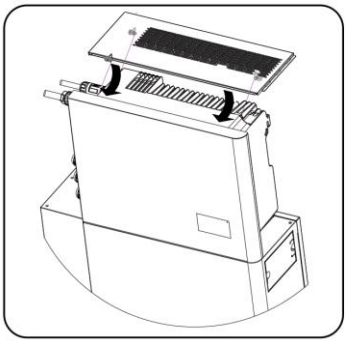

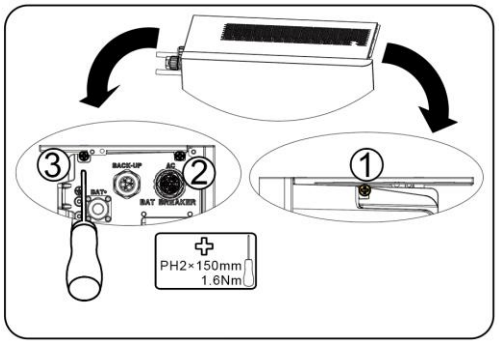

Mount right cover of the inverter, align the hooks on the side of the right cover with the slots on the front cover side, and downwards insert the right cover along the edge of the inverter front cover.

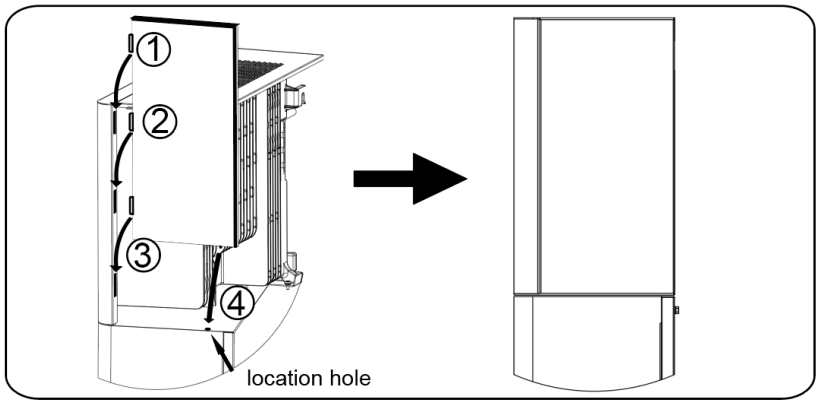

Cut a cable hole based on the AC cabling routing, and route the cables through the cable hole. Align the hooks on the side of the cable cover with the slots on the front cover side, secure the cable cover to the inverter (tool: T20 screwdriver, torque: 1.6Nm)

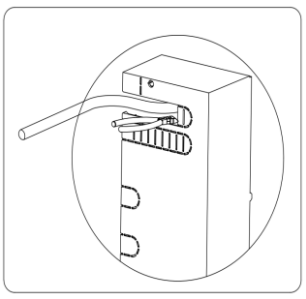

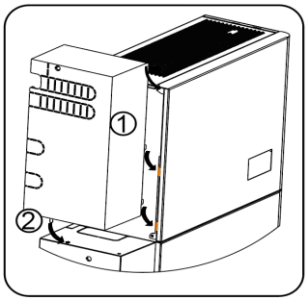

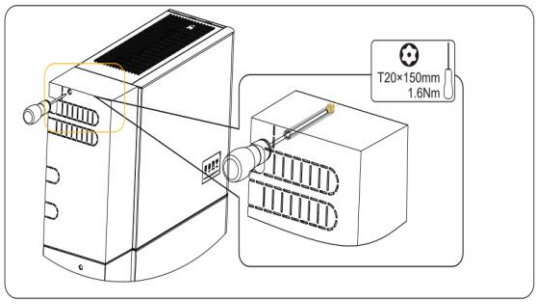

7. Installer Account Registration and Install a New System

7.1. Register on AlphaESS App

7.1.1. Download and Install the AlphaESS App

1. Android device users can download the App through major Android application markets such as Google Play.

2. IOS device users can search for "AlphaCloud" in App Store and download the App.

AlphaCloud

7.1.2. Register an Installer Account

If you don't have an installer account, please register first. If you do not have an AlphaESS "License Number", please contact the AlphaESS technical service team.

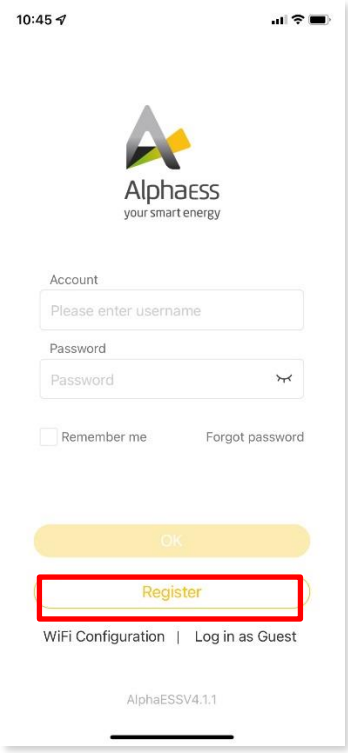

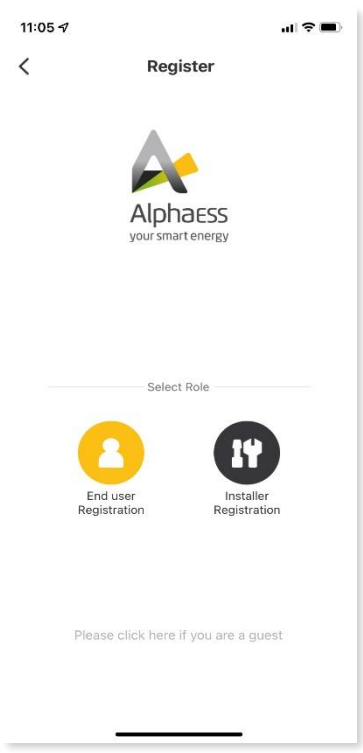

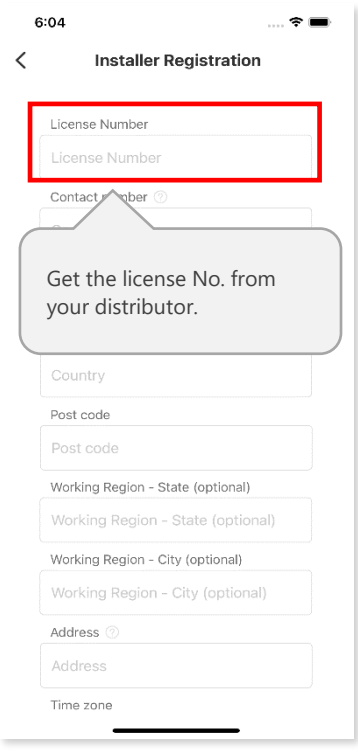

If you already have an installer account, please log in directly.

7.1.3. Overview of Functions for Installer Account

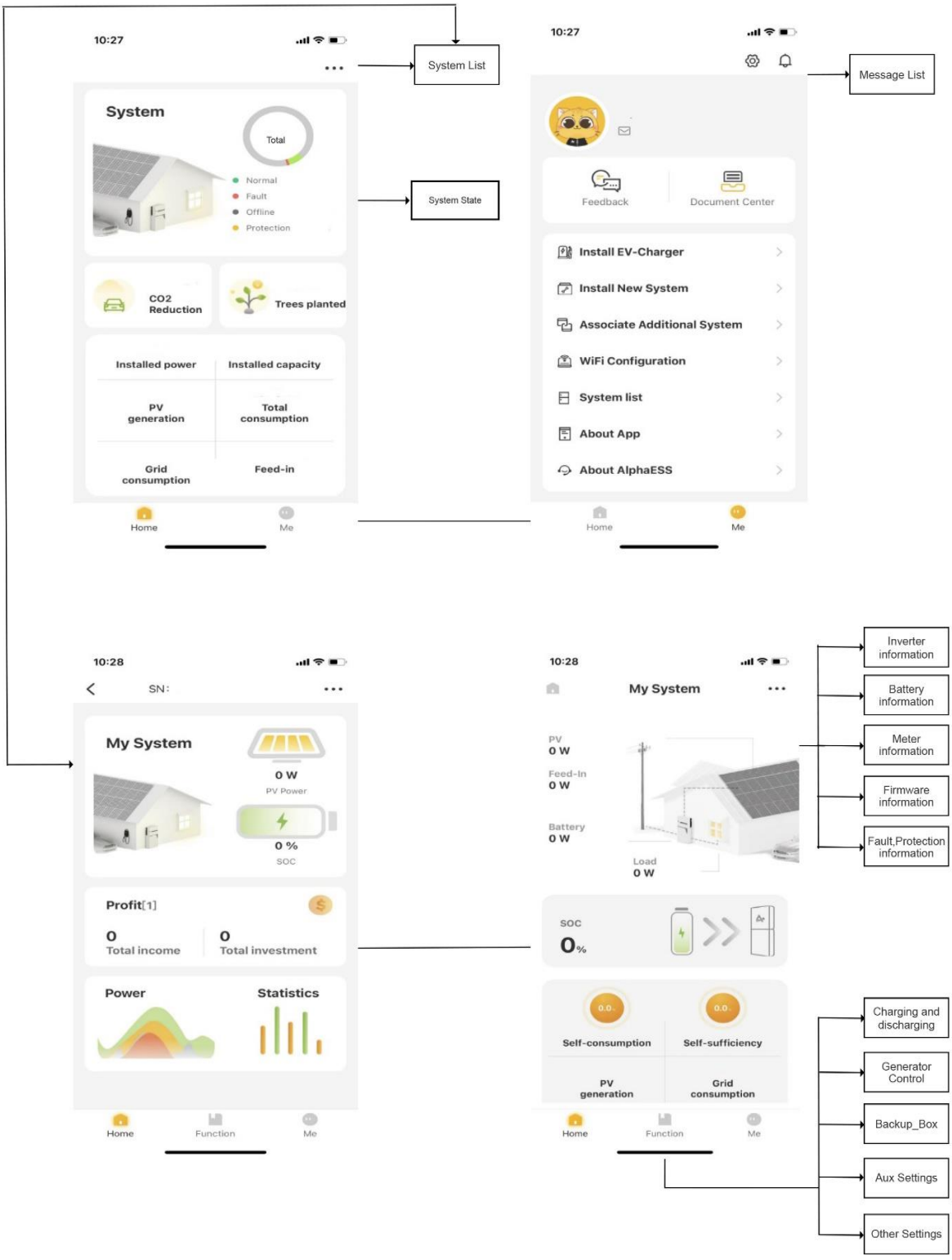

7.1.4. Register a New System – "Install New System"

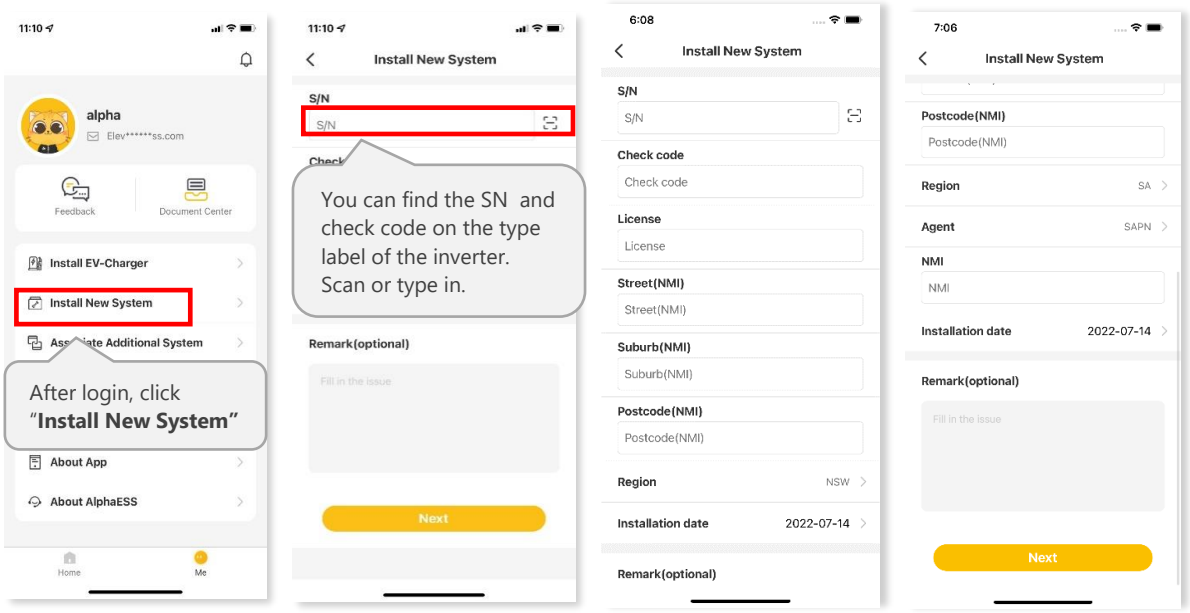

Australian Installer

Please click "Install New System", enter your installer account ID in the "license" field to bind the system to your account and "activate" the system.
Enter S/N, check code, license, create time, customer full name, contact number, address, and click the "save" button.

Only for Australian installers, they need to do more settings. If you are an Australian installer, you will need to fill in the Street (NMI), Suburb (NMI) and Postcode (NMI) fields and the Region field, which has six fixed options (NSW, QLD, VIC, SA, TAS, WA). If SA is selected for Region, two more fields are added which are Agent and NMI. These fields are required in order to meet the requirements of the Network Operator for Dynamic Export and for PV output control by a Relevant Agent.

Fields that are not marked "optional" need to be filled in.

Click "Next" to go to the installation steps interface.

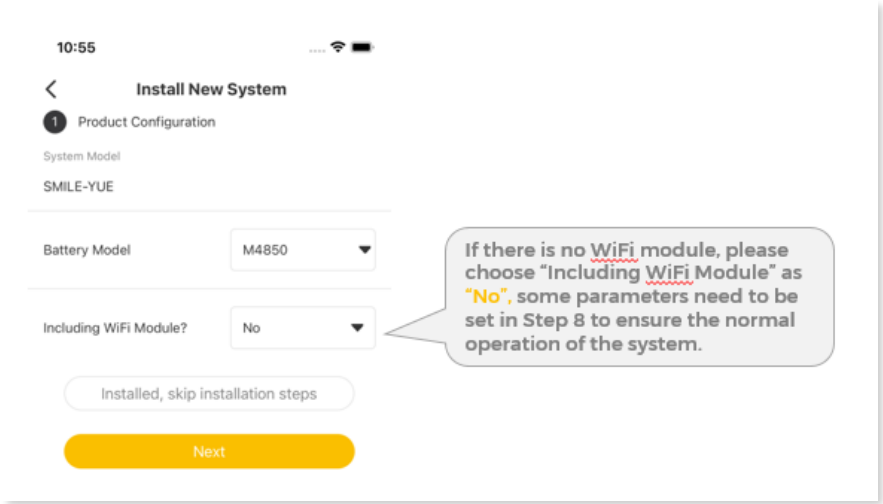

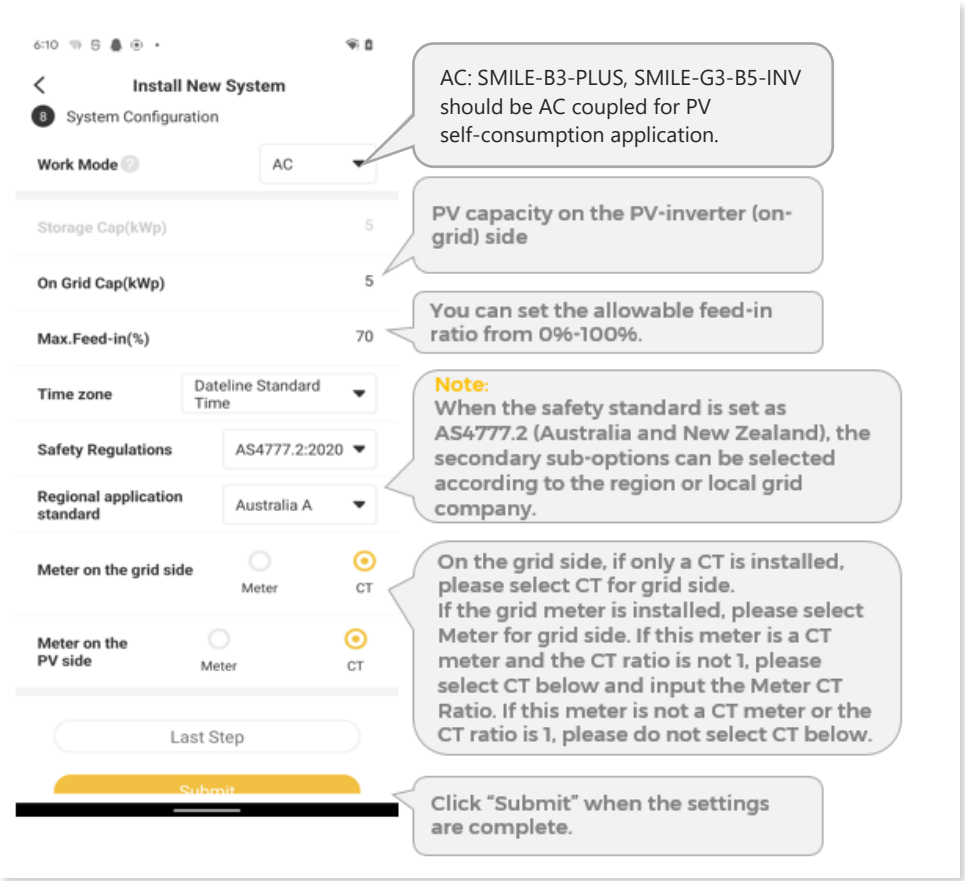

NOTICE

The safety standard must be set correctly

If you select a safety standard that is not valid for your country and purpose, it can cause a disturbance in the energy storage system and lead to problems with the Network Operator. When selecting the safety standard, you must always observe the locally applicable standards and directives as well as the properties of the PV system (e.g. PV system size, grid-connection point).

- If you are not sure which safety standard is valid for your country, region or purpose, contact your Network Operator for information on which safety standard is to be used.

If there is a Wi-Fi module, please choose "Including Wi-Fi Module" as "Yes", the App will jump to the Wi-Fi configuration page, and please refer to Chapter 9.3.

NOTICE

A Note on setting Feed-in limits with multiple PV systems

If the AlphaESS product is installed with DC-connected Solar Panels as well as with an existing AC-coupled PV system, Installers may need to set a Feed-In limit to comply with Local Regulations.

The Feed-in limit should be set to the total Phase feed-in limit set by the Network Operator, regardless of the size of the existing AC-coupled PV system. Only set the feed-in limit to *zero* if the Network Operator has dictated *zero feed-in* from the house.

7.2. Register on AlphaCloud

7.2.1. Register an Installer Account

If you do not have an Installer account, you can create a new account on our web server for system monitoring purposes. In addition, AlphaESS Warranty is predicated on this connection to our web server.

The data produced prior to registration can be synchronized to the web server.

Step 1: Please open the portal: www.alphaess.com.

Step 2: Please fill in "Username", "Password" and click "Login" if you have already registered.

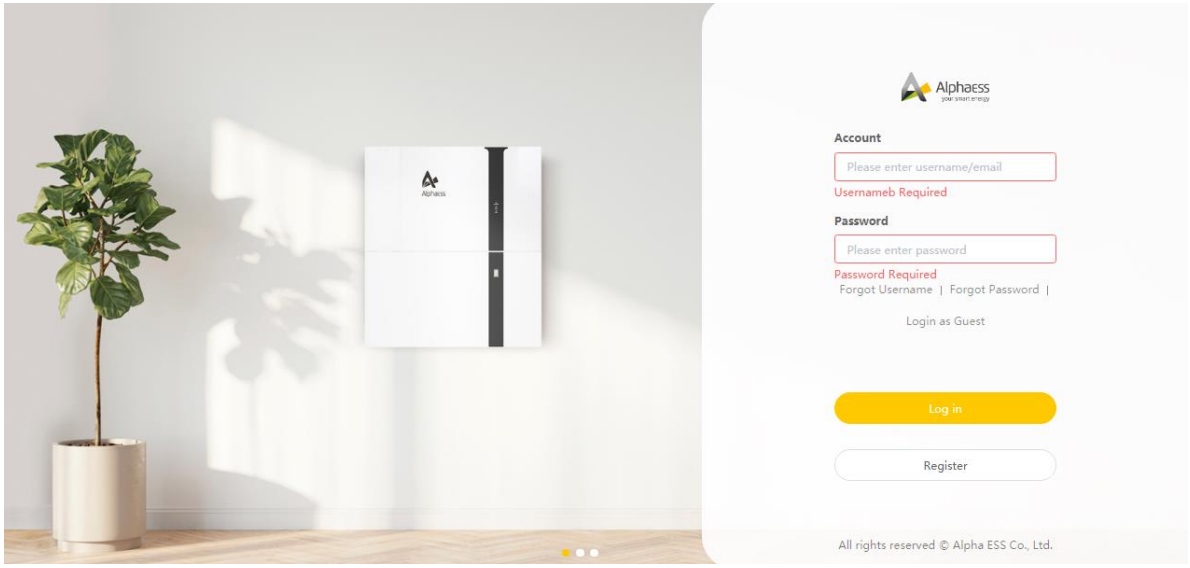

If not, please register by filling in the following web form.

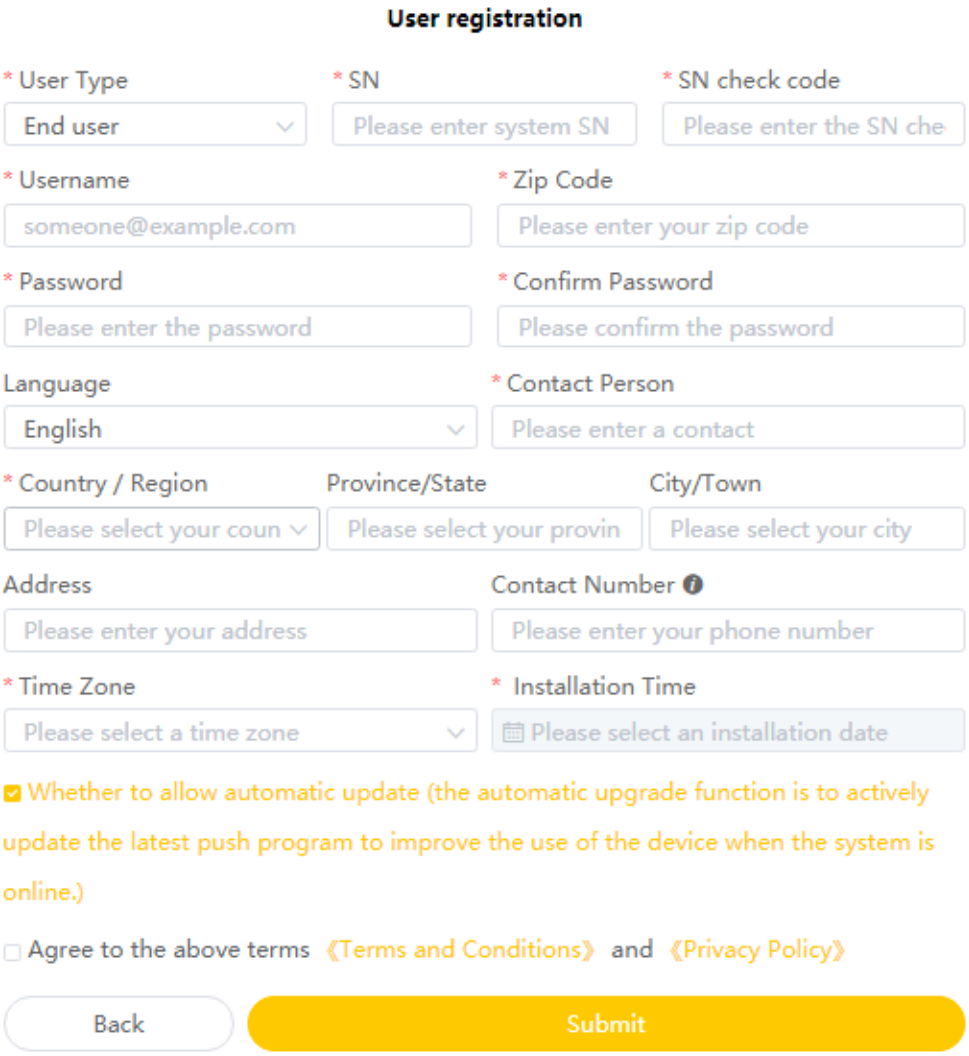

In this form, all fields with a red star are compulsory.
***Serial Number:** SN (please see the type label of the inverter)
***Username:** 5-15 letters / numbers
***Password:** 5-15 letters / numbers / characters
More details are available in the Online Monitoring Web Server Installers User Manual, which can be downloaded from the AlphaESS homepage.

7.2.2. Install New System

Installers who haven't yet registered need to click “Register” to visit the registration page. Please refer to the “AlphaCloud Online Monitoring Web Server Installers User Manual”, which you can get from the AlphaESS sales team and get an AlphaESS Installer license number.

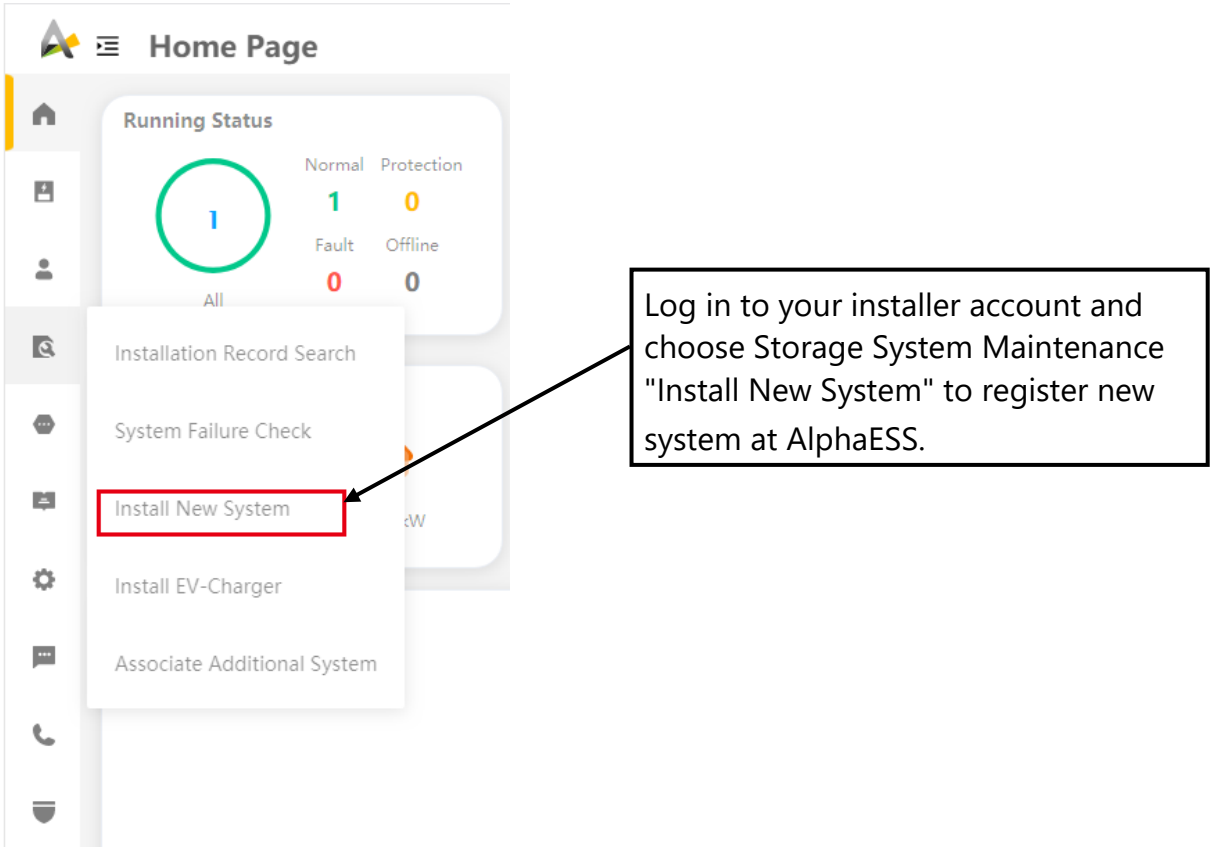

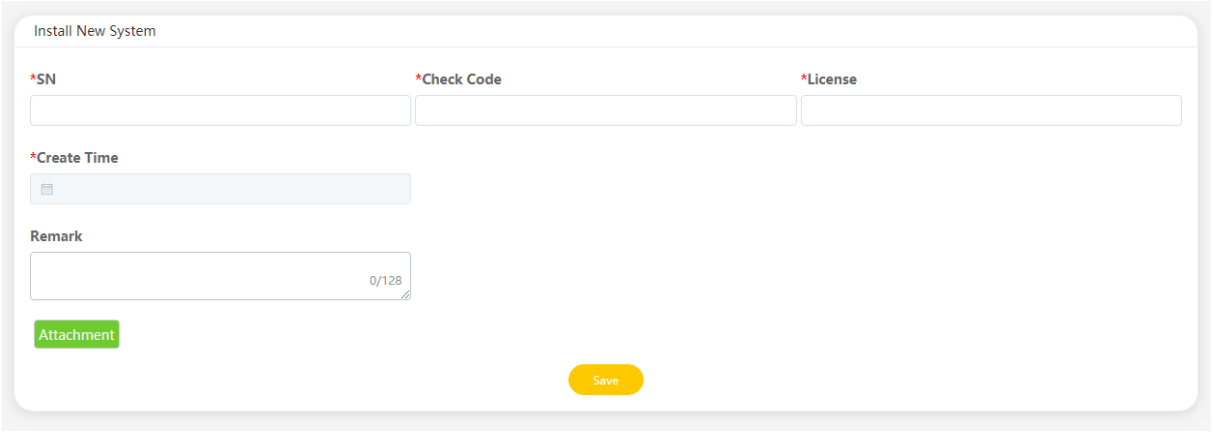

Enter the system S/N, check the code, license, and installation date, then click the “Save” button. The red * indicates a required field. Click the “Browse” button to select any attachment you want to add.

8. Power On and Off the System

8.1. Power on the System

1) Switch on the battery breaker which is at the lower left of the inverter.

2) Switch on the battery breakers of all batteries (located on the left-hand side of the battery).

3) Shortly press the power buttons of all parallel batteries. For more than one parallel battery installed, please press all power buttons within 10 seconds. This button may be hard to spot, but it is located just beside and above the Battery Breaker on each parallel battery.

For series batteries, please skip this step.

4) Switch on the AC breaker between the grid port of the energy storage inverter and the mains grid (this AC breaker should be labelled Main Switch Battery ESS Supply or similar).

5) Switch on the AC breaker between the backup port of the energy storage inverter and the loads (this AC Breaker should be labelled Main Switch Battery ESS Backup or similar).

6) Switch on the PV switch at the left middle of the inverter (if there is PV directly connected to the energy storage inverter).

7) Switch on the AC breaker (if there is any) between any separate PV inverter and the mains grid. These separate PV inverters are also referred to as “AC-coupled PV inverters”.

8.2. Power off the System

WARNING

After the energy storage system is powered off, the remaining electricity and heat may still cause electric shocks and body burns. Please put on protective gloves and operate the product 5 minutes after the system is powered off.

1) Switch off the AC breaker between the energy storage inverter and the backed-up loads (this AC breaker should be labelled *Main Switch Battery ESS Backup* or similar).
2) Switch off the PV DC Isolator(s) between the PV string and the energy storage inverter if there are any.
3) Switch off the PV switch on the left-hand side of the energy storage inverter (if there is PV directly connected the energy storage inverter), immediately below the Wi-Fi module.
4) Long press 5s the power buttons located beside the battery breaker of the parallel batteries.
   For series batteries, please skip this step.
5) Switch off the battery breakers of all batteries (located on the left-hand side of the battery).
6) Switch off the battery breaker which is at the lower left of the inverter.
7) Switch off the AC breaker between the energy storage inverter and the mains grid (this AC breaker should be labelled *Main Switch Battery ESS Supply* or similar).

9. Commissioning

9.1. Check before Power-On

No.	Check Item	Acceptance Criteria
1	Installation/Mounting environment	The installation environment is safe and the unit has adequate clearance as per the instruction in this manual as well as in compliance with local standards. The area around the installation should be free from clutter and should not be flood-prone.
2	Battery and inverter mounting	The battery and inverter should be mounted correctly, securely, and reliably.
3	Wi-Fi mounting	The Wi-Fi module should be mounted correctly, securely, and reliably.
4	Cable layout	Cables should be routed neatly and protected adequately where exposed, in accordance with standards.
5	Cable tie	Cable ties should be secured and trimmed evenly and no burr exists.
6	Grounding	The grounding cables should be connected correctly, securely, and reliably. Impedance/resistance checks should be conducted to confirm reliable grounding connections.
7	Switch and breakers status	The PV switch (if there is any) and battery breakers and any breakers connecting to the system should be OFF.
8	Cable connections	The AC cables, PV cables (if there are any), battery power cables, and communication cables should be connected correctly, securely, and reliably.
9	Unused ports	Unused power ports and communication ports should be sealed from water or dust ingress by watertight caps.

9.2. Actions before Commissoning

Powering on the System:

- Check the voltage range and frequency range of the grid and the installation (including direction and phase) of all CT(s) and/or meter(s).
- Switch on the battery breaker which is located on the left-hand side of the SMILE-G3 single phase energy storage inverter, immediately below the AC supply plug.
- Switch off the battery breaker of the batteries.
- Switch on the AC breaker between the grid port of the energy storage inverter and the grid (this AC Breaker should be labelled *Main Switch Battery ESS Supply* or similar).
- Switch on the AC breaker between the backup port of the energy storage inverter and the loads (this AC Breaker should be labelled *Main Switch Battery ESS Backup* or similar).
- Switch off the PV switch (if there is any) at the bottom left side of the energy storage inverter.
- If there is PV inverter directly connected to the energy storage inverter, switch off the AC breaker (if there is any) between any separate PV inverter and the grid. These separate PV Inverters are also referred to as “AC-coupled PV inverters”.

9.3. Wi-Fi Module Configuration and Parameters Settings

9.3.1. Wi-Fi Configuration

This section is for users who have an energy storage system with a Wi-Fi module.

Configure the network with AlphaESS App, set system basic parameters, monitor system operation status and check configuration information.

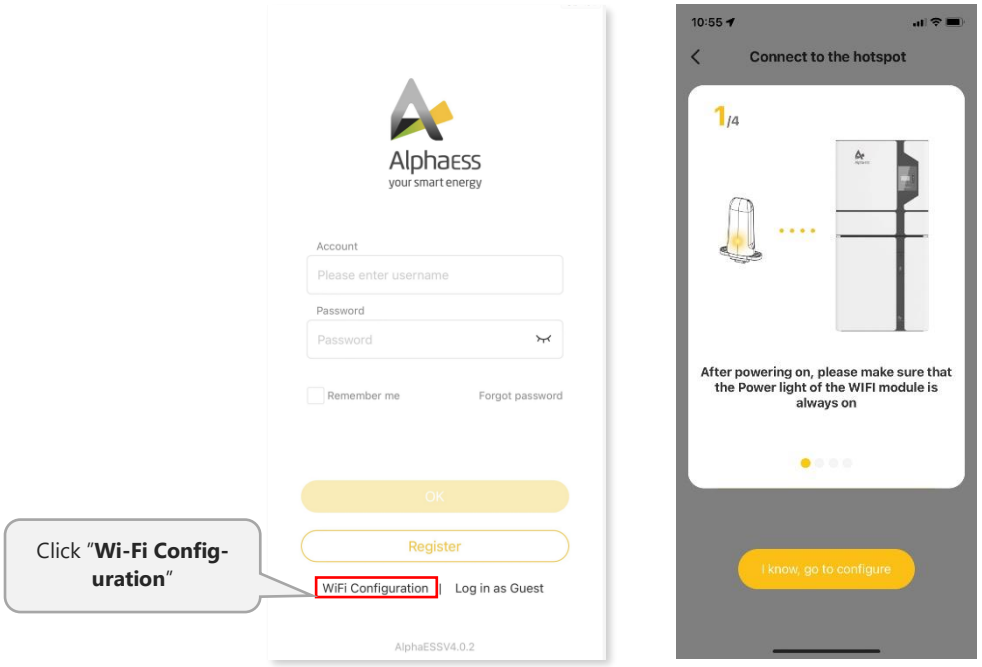

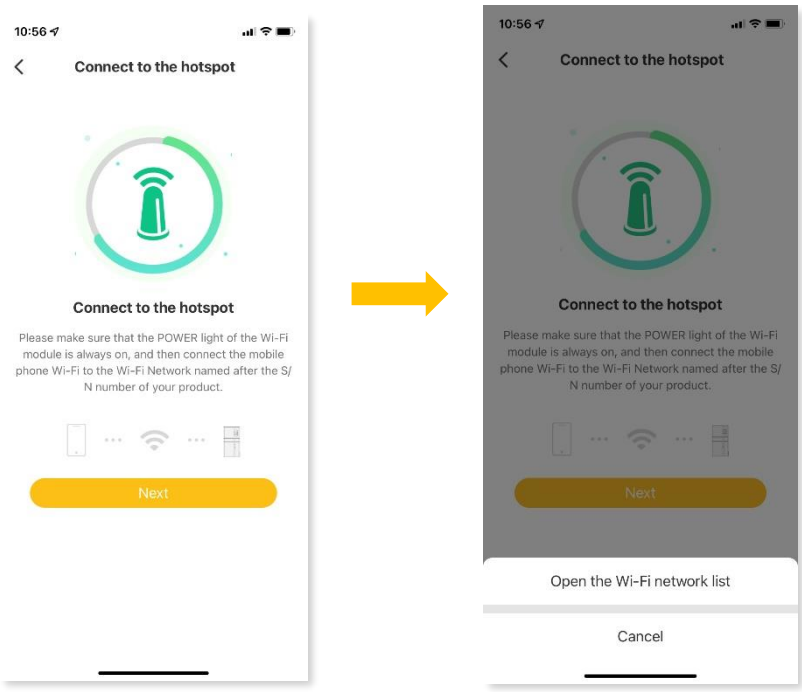

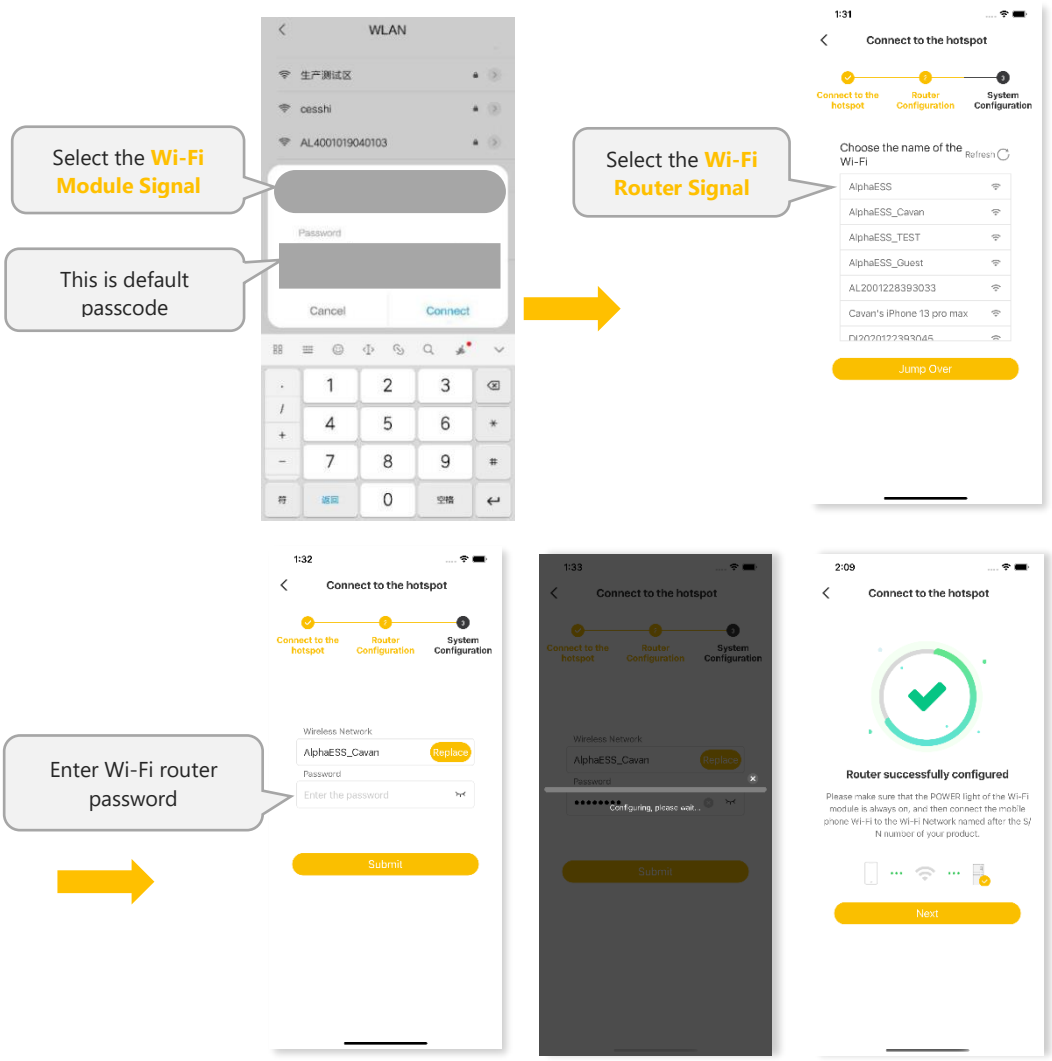

NOTICE

The system will not be able to connect to the internet without either a physical LAN cable connection or configured Wi-Fi if the Wi-Fi module is used.

9.3.1.1 Basic Parameters Settings

DC Mode

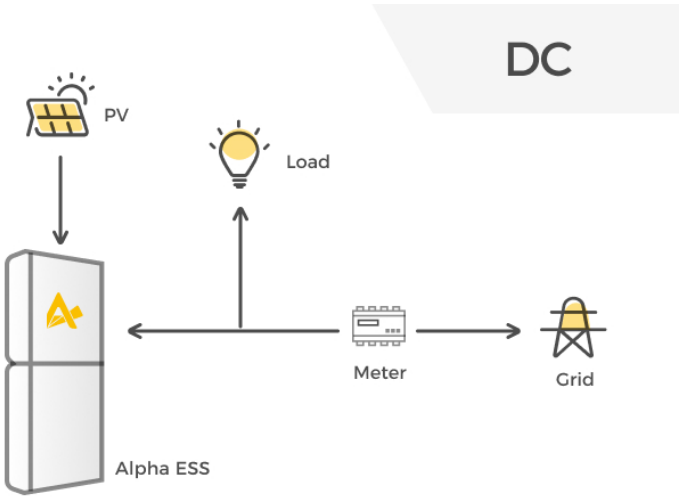

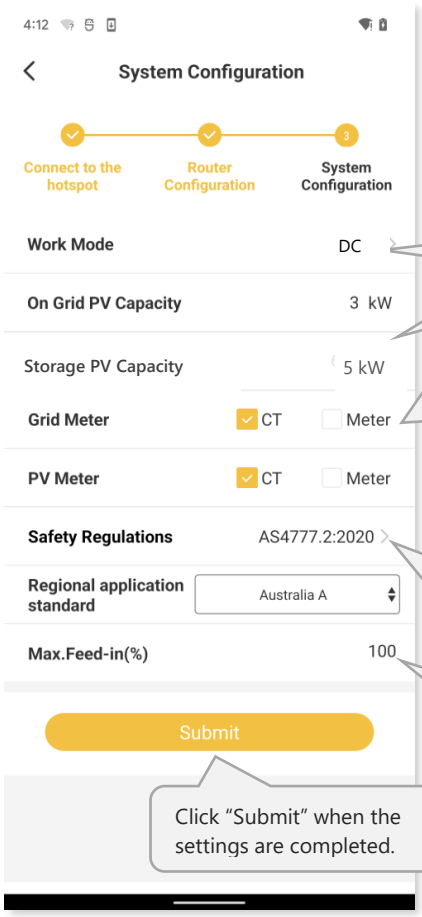

Three mode options: **DC**/AC/Hybrid

Storage PV capacity: PV capacity on the energy storage inverter side

On the grid side, if only a CT is installed, please select "CT" for grid side. If the grid meter is installed, please select "Meter" for grid side. If this meter is a CT meter and the CT ratio is not 1, please select "CT" below and input the Meter CT Ratio. If this meter is not a CT meter or the CT ratio is 1, please do not select "CT" below.

Note: When the safety standard is set as AS4777.2 (Australia and New Zealand), the secondary sub-options can be selected according to the region or local grid company.

You can set the allowable feed-in ratio from 0%-100%.

Click "Submit" when the settings are completed.

AC Mode

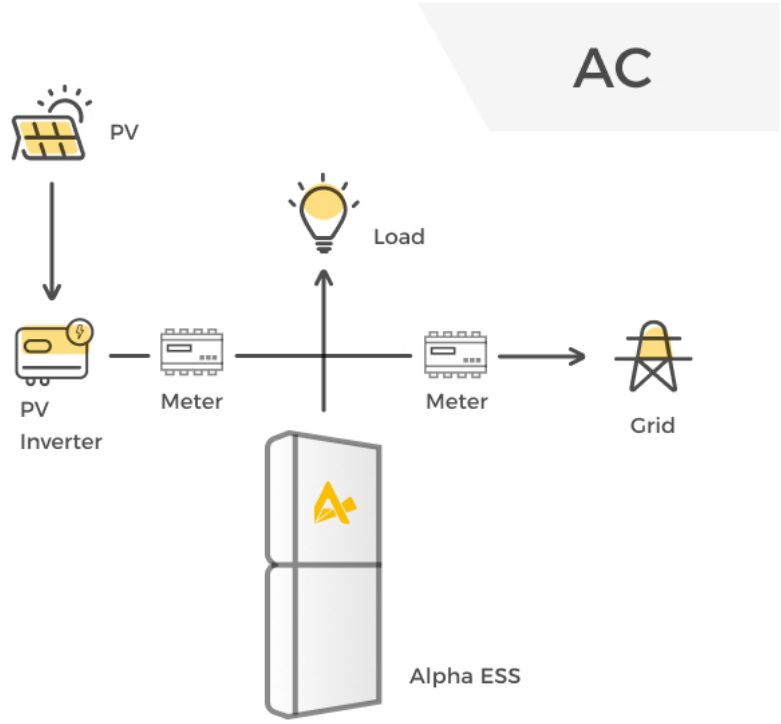

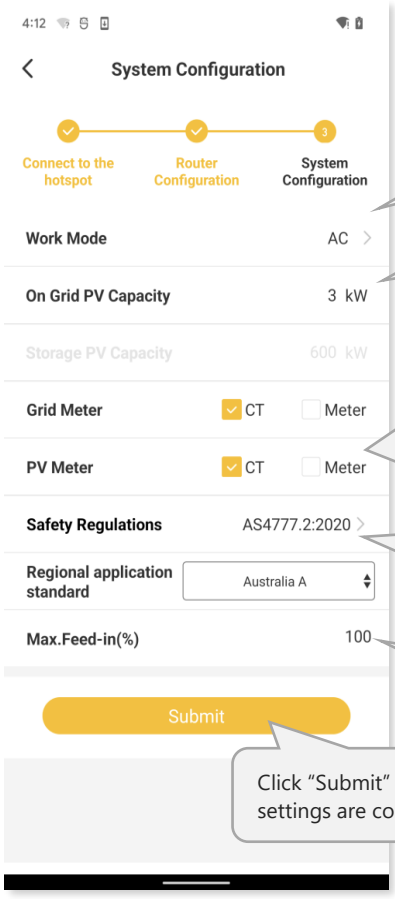

Three mode options: DC/**AC**/Hybrid

PV capacity on the PV-inverter (on-grid) side

On the grid side, if only a CT is installed, please select "CT" for grid side.
If the grid meter is installed, please select "Meter" for grid side. If this meter is a CT meter and the CT ratio is not 1, please select "CT" below and input the Meter CT Ratio. If this meter is not a CT meter or the CT ratio is 1, please do not select "CT" below.
Please refer to the above steps to set the PV-CT or meter on PV side.

Note: When the safety standard is set as AS4777.2 (Australia and New Zealand), the secondary sub-options can be selected according to the region or local grid company.

You can set the allowable feed-in ratio from 0%-100%.

Click "Submit" when the settings are completed.

Hybrid Mode

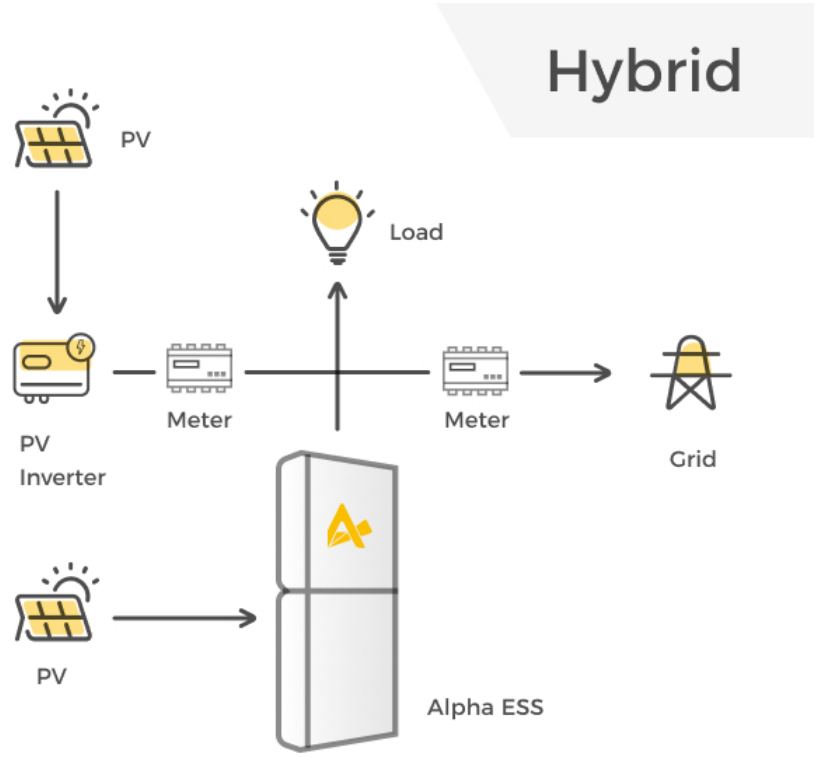

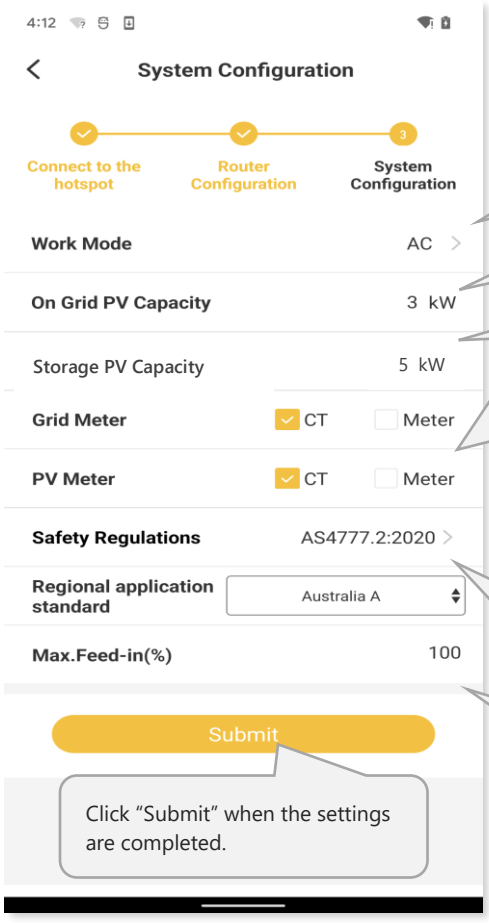

Three mode options: DC/AC/**Hybrid**

PV capacity on the PV inverter (on-grid) side

Storage PV capacity: PV capacity on the energy storage inverter side

On the grid side, if only a CT is installed, please select "CT" for grid side. If the grid meter is installed, please select "Meter" for grid side. If this meter is a CT meter and the CT ratio is not 1, please select "CT" below and input the Meter CT Ratio. If this meter is not a CT meter or the CT ratio is 1, please do not select "CT" below.
Please refer to the above steps to set the PV-CT or meter on PV side.

Note: When the safety standard is set as AS4777.2 (Australia and New Zealand), the secondary sub-options can be selected according to the region or local grid company.

You can set the allowable feed-in ratio from 0%-100%.

NOTICE

The Safety Regulations field must be set correctly

If you select a safety standard that is not valid for your country and Network, it will cause a disturbance in the energy storage system and lead to problems with the Network Operator. When selecting the safety standard, you must always observe the locally applicable standards, directives and the properties of the PV system (e.g. PV system size, grid-connection point).

- If you are not sure which safety standard is valid for your location, please contact your Network Operator for information on which safety standard is to be selected.

9.3.2. Direct Commissioning on Wi-Fi Configuration

You can commission the system during the Wi-Fi configuration process directly.

9.3.2.1 Check the Running State without PV and Battery

- If there is PV inverter directly connected to the energy storage inverter, switch off the AC breaker (if there is any) between any separate PV inverter and the grid.

Keep the PV switch of the energy storage inverter off.
Keep the battery breaker of the batteries off.

- Turn on some larger loads that are directly connected to the grid to check the grid status. The inverter LED (“SYS”) will be red, which is normal as the battery is not connected. The grid power should be positive. Otherwise please check the installation direction of the grid CT or grid meter.

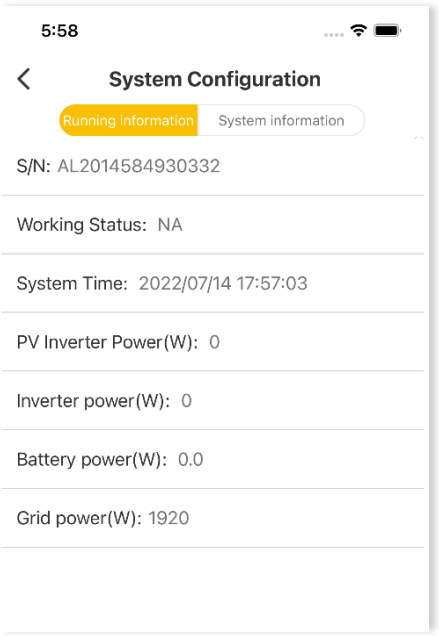

9.3.2.2 Check the Running State of PV and Battery

- Switch off the AC breaker between the grid port of the energy storage inverter and the grid, and switch off the AC breaker between the backup port on the energy storage inverter and the loads.
- Switch on the battery breaker of the batteries.
- Shortly press the power buttons of all parallel batteries. For more than one parallel battery installed, please press all power buttons within 10 seconds. For series batteries, please skip this step.
- Switch on the AC breaker between the grid port of the energy storage inverter and the grid.
- Switch on the PV switch (if there is any) on the energy storage inverter and AC breaker (if there is any) on the PV-inverter.
- Switch off all loads to see the battery charging status. The inverter LED (“SYS”) will be solid White. The battery power value should be negative. If the system is in AC or hybrid mode, the PV inverter power value should be positive. If it is abnormal, please check the installation direction of PV CT or PV meter.

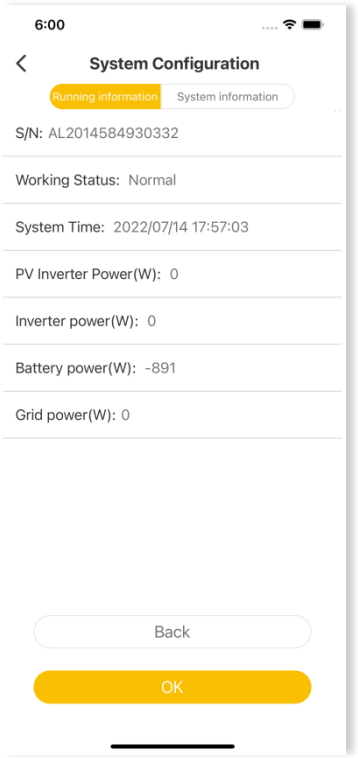

DC Mode

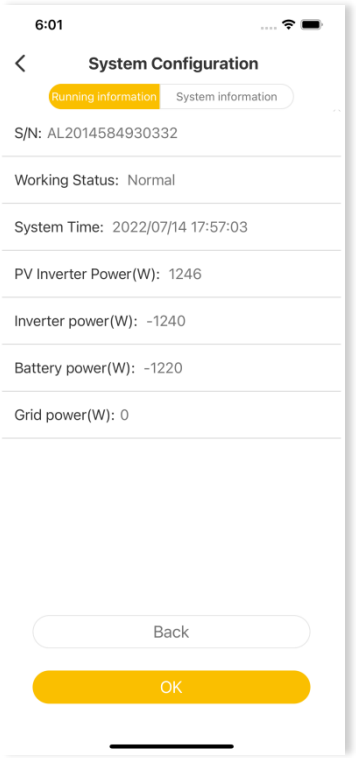

AC Mode

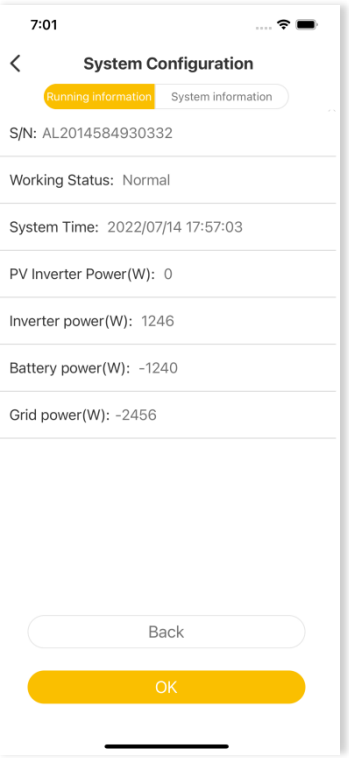

Hybrid Mode

9.3.2.3 Check the UPS State

- Please connect an essential electrical appliance to the socket of backup load, or switch on an essential electrical appliance already connected to the backup load port of the energy storage inverter.
- Switch on the AC breaker of the backup port of the energy storage inverter.
- Switch off the external AC breaker between the grid and the energy storage inverter.
- The energy storage inverter will enter the UPS mode at once.
- If the electrical appliance on backup side works normally, it means that the backup wiring has been connected correctly.

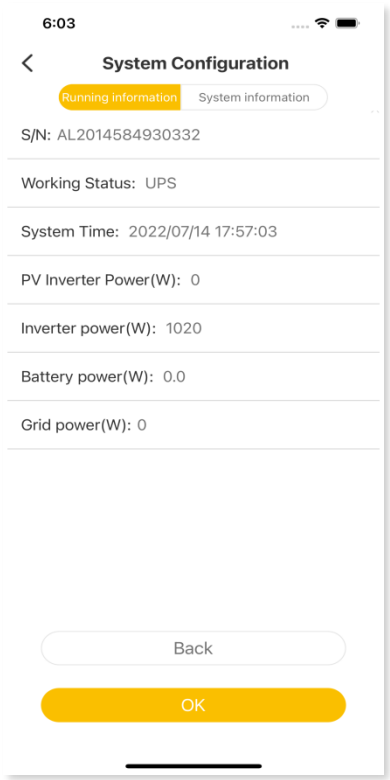

NOTICE

If the LEDs on the display panel of the inverter or the battery are displaying red or yellow during commissioning, please refer to Chapter 10.2 Troubleshooting.

9.4. Install a New System and Set on the App

9.4.1. Download and Install the App

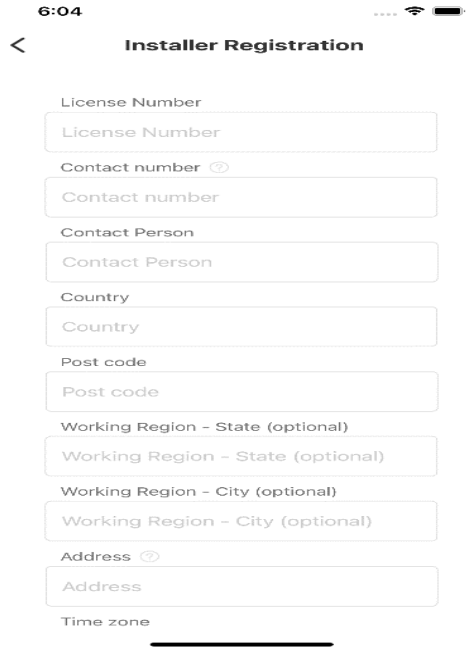

9.4.2. Register as an Installer

If you don't have an installer account, please register first.

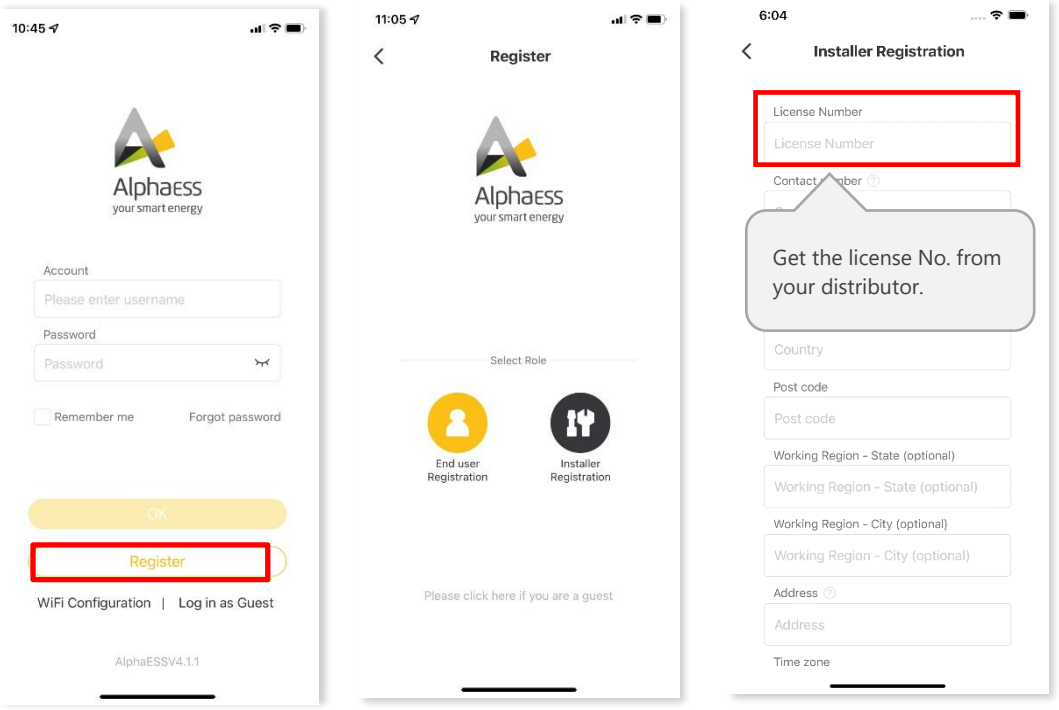

If you already have an installer account, please log in directly.

9.4.3. Install a New System

If you have “installed” the new system already or want to install it later, please directly to the Chapter. If not, you can “Install New System” first.

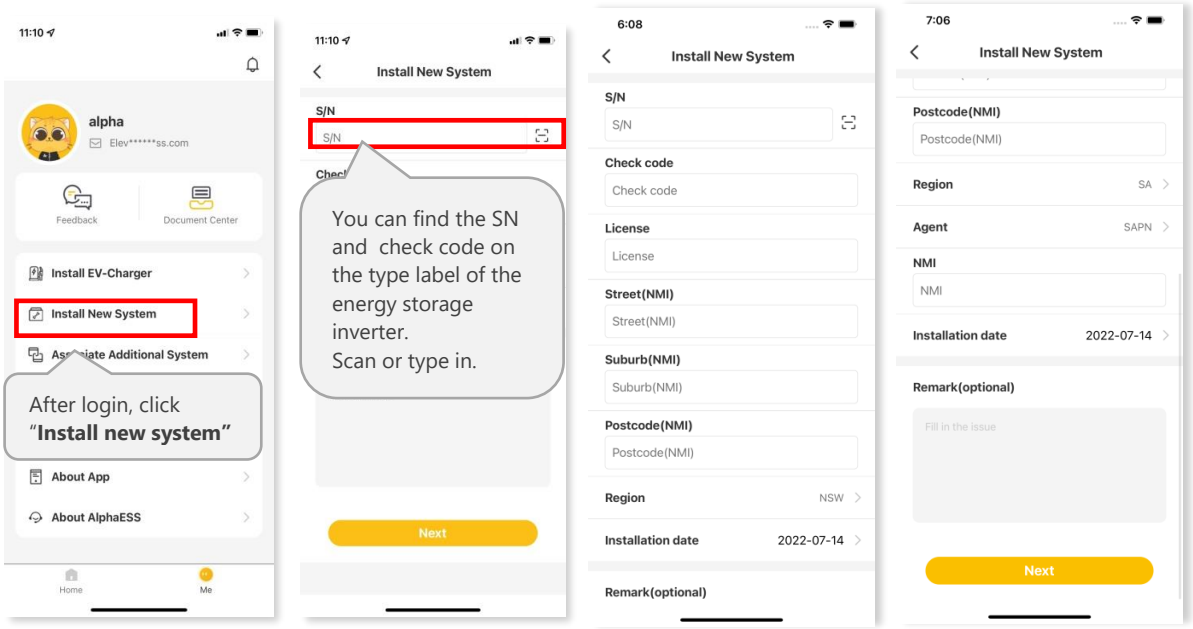

Australian Installer

Please click “Install New System”, enter your installer account ID in the “license” field to bind the system to your account and “activate” the system.

Enter S/N, check code, license, create time, customer full name, contact number, address, and click the “save” button.

Only for Australian installers, they need to do more settings. If you are an Australian installer, you will need to fill in the Street (NMI), Suburb (NMI) and Postcode (NMI) fields and the Region field, which has six fixed options (NSW, QLD, VIC, SA, TAS, WA). If SA is selected for Region, two more fields are added which are Agent and NMI. These fields are required in order to meet the requirements of the Network Operator for Dynamic Export and for PV output control by a Relevant Agent.

Fields that are not marked "optional" need to be filled in.

Click "Next" and go to Chapter 9.3 if the Wi-Fi module has not been configured.

9.5. Check the Running State Online

If you have completed commissioning as described in Chapter 9.3.2, you may skip this section.

You can also commission the system after Wi-Fi configuration.

Please make sure the PV switch and battery breakers and all the breakers connecting to the system are ON.

9.5.1. Check the Charge Function

- To make sure the system is installed correctly and operating normally, please follow the instructions below to set the system to “Charging/Discharging Setting”.

Step 1

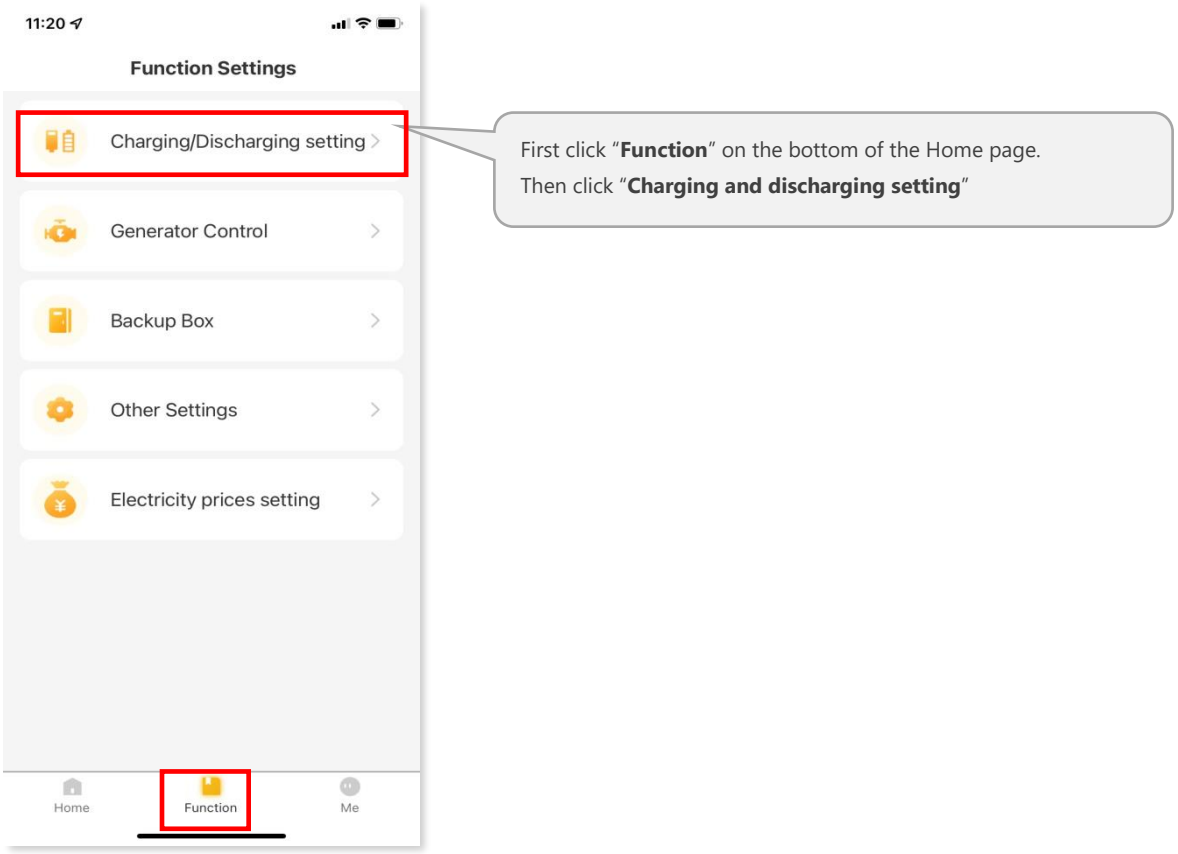

Step 2

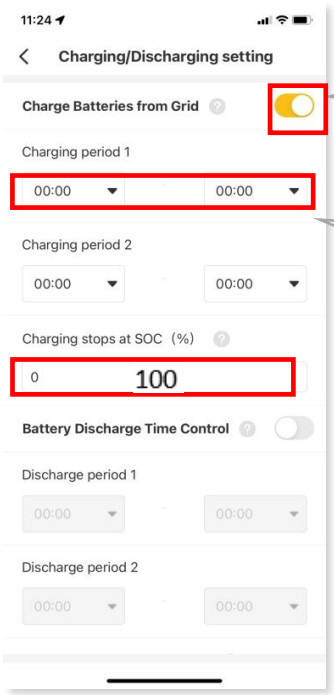

Select "**ON**" to Charge Batteries from Grid"

please set the "Charging period 1" for the time and adjust the SOC to **100** under this operation.

Step 3

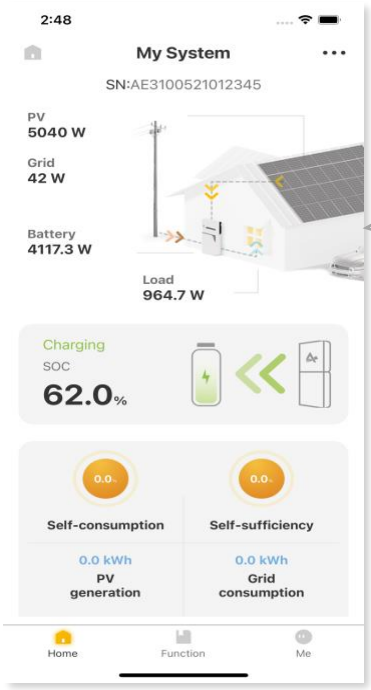

The relative value should be as follows: Load = PV ± GRID – Battery
Battery should be in **charging** status. **PV arrow** should be as the picture shown.
±: >>absorbing from grid: +; << feed-in to grid:-
If not correct, please check the installation direction of the CTs or meters on both grid side and PV side.

- Check the running status of the system in "Step 3".
- If the operation is normal as described in "Step 3", please remember to deactivate the "Charging/Discharging Setting" by clicking "OFF" and save the changes.

9.5.2. Check the PV Generation and Discharge Function

Step 1: Please switch off the PV switch on the energy storage inverter and the AC breaker on the PV inverter if there is any. Switch on some larger loads to see the battery discharging status.



The relative value should be as follows:
Load = Grid + Battery

Step 2: Please switch on the PV switch on the energy storage inverter and the AC breaker on the PV inverter if there is any. Check the running status of the system.



The relative value should be as follows:
Load = PV ± Grid ± Battery
±: charging: - , discharging: +
PV arrow should align with the picture shown.
±: >>absorbing from grid: +,
<< feed-in to grid:-
If not correct, please check the installation direction of the PV CT or meter on the PV side.

9.5.3. Check the UPS State

- Please connect an essential electrical appliance to the socket of backup load, or switch on an essential electrical appliance already connected to the backup load port of the energy storage inverter.
- Switch on the AC breaker of the backup port of the energy storage inverter.
- Switch off the external AC breaker between the grid and the energy storage inverter.
- The energy storage inverter will enter the UPS mode at once.
- If the electrical appliance on backup side works normally, it means that the backup wiring has been connected correctly.

> **NOTICE**
>
> If the LEDs on the display panel of the inverter or the battery are displaying red or yellow during commissioning, please refer to Chapter 10.2 Troubleshooting.

9.5.3.1 Switch on all of the Breakers

Please ensure that all of the breakers and switches in the system are switched on.

9.6. Instruct the End User to Install the App

Please make sure that your end user has downloaded the App and registered the account correctly, and added the system SN.

10. Maintenance and Troubleshooting

10.1. Routine Maintenance

Normally, the energy storage system needs no maintenance or calibration.
However, in order to maintain the accuracy of the SOC, it is recommended to perform a full charge calibration for SOC (charge the battery until the charge power is 0W) on the battery at regular intervals (such as two weeks).
Before cleaning, ensure that the system is disconnected from all power sources. Clean the housing, cover and display panel with a soft cloth.
To ensure that the energy storage system can operate properly in the long term, it is advised to perform routine maintenance as described in this chapter.

Maintenance Checklist

Check Item	Acceptance Criteria	Maintenance Interval
Product cleanliness	The enclosure of the inverter should be free from obstacles or dust.	Once every 6 to 12 months
Product visible damage	The product should be not damaged or deformed.	Once every 6 months
Product running status	1. The product should operate without any abnormal sound. 2. All parameters of the product should be set correctly. Perform this check when the product is running.	Once every 6 months
Electrical connections	1. Cables should be securely connected. 2. Cables should be intact, and in particular, the cable jackets touching the metallic surface should not be scratched. 3. Unused cable glands should be blocked by rubber sealing which are secured by pressure caps.	Perform the first maintenance 6 months after the initial commissioning. Thereafter, perform the maintenance once every 6 to 12 months.

⚠ CAUTION

Risk of burns due to hot enclosure of the inverter

The enclosure of the inverter can get hot during operation.

- Do not touch any parts other than the display panel during operation.
- Wait approximately 30 minutes for the inverter to cool down before cleaning.

10.2. Troubleshooting

10.2.1. Common Errors

Communication Troubleshooting

LED Indicator	Error Code	LED Display	Description	Troubleshooting
SYS red light is flashing fast	4		Inveter lost	Inverter communication lost 1. Restart the system. 2. Contact service to remotely update the inverter program. 3. If the error persists, contact service for further check.
SYS red light is glowing. METER light is flashing fast if Grid meter lost. METER light is flashing slow if PV meter lost . METER light is off if all meters lost.	5		Grid meter lost	Grid side meter lost 1. Check whether the system configuration parameters of AlphaESS App or AlphaCloud are correct and whether the meter is used on the grid side 2. Check whether the communication cable of the grid meter is connected correctly (RS485: 3A6B). 3. Check whether the communication configuration parameters of the grid meter are correct (communication address and baud rate). 4. If the error persists, contact service for further check.

	6	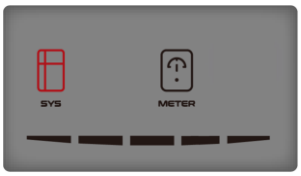	PV meter lost	PV inverter side meter lost 1. Check whether the system configuration parameters of AlphaESS App or AlphaCloud are correct and whether the meter is used on the PV inverter side 2. Check whether the communication cable of the meter of PV inverter side is connected correctly (RS485: 3A6B). 3. Check whether the communication configuration parameters of the meter on the PV inverter side are correct (communication address and baud rate). 4. If the error persists, contact service for further check.
SYS red light is glowing, BAT light is off	7	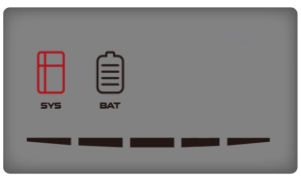	BMS lost	BMS lost 1. Check whether the BMS communication connection between the battery and the inverter is correct. 2. Check if the battery is switched on. 3. If the error persists, contact service for further check.

Battery Error Troubleshooting

LED Indicator	Error Code	LED Display	Description	Troubleshooting
SYS red light is glowing, BAT light is flashing during battery is in faulty.	60002		Circuit_Breaker_Open	Try to switch on the breakers of all batteries. If the error persists, contact service for further check.
	60004		Follower_Battery_Communication_Lost	Check the communication cables between batteries. If the error persists, contact service for further check.
	60006		Host_Battery_Communication_Lost	
	60008		Multi_Host_error	

Inverter Error Troubleshooting

LED Indicator	Error Code	LED Display	Description	Troubleshooting
SYS red light is flashing fast.	100000		Grid_OVP	1. Check whether grid is abnormal. 2. Confirm whether the grid cable connection is normal. 3. Restart inverter. If the error persists, contact service for further check.

SYS red light is flashing fast	100001		Grid_UVP	1. Check whether the PV input voltage of PV1 and PV2 exceeds 580V. If there is no PV input overvoltage, restart the inverter. If the error persists, contact service for further check.
	100002		Grid_OFP	
	100003		Grid_UFP	
	100005		BUS_OVP1	1. Check whether the PV input voltage of PV1 and PV2 exceeds 580V. If there is no PV input overvoltage, restart the inverter. **If the error persists, contact service for further check.**
	100007		Insulation_ fault	1. Check whether PV cable connection is reliable. 2. Check whether PV cable is damaged. **If the error persists, contact service for further check.**
	100008		GFCI_fault	1. Restart inverter and check whether the error persists. If it so, please call service.
	100010		Grid_relay_ fault	

SYS red light is flashing fast.	100011		Over_ Temperature	1. Check whether the environment around inverter has poor heat dissipation. 2. Confirm whether inverter installation meets the installation requirements.
	100012		PV_Reverse	1.Check whether the PV terminal of the inverter is reversed. If the connection of PV terminals is right and the error persists, please call service.
	100013		BAT_Reverse	1.Check whether the BAT terminal of the inverter is reversed. If the connection of BAT terminals is right and the error persists, please call service.
	100017		MPPT1_OVP	Check the PV1 voltage. If it exceeds 585VDC, reduce the number of PV modules.
	100021		MPPT2_OVP	Check the PV2 voltage. If it exceeds 585V, reduce the number of PV modules
	100025		BAT_OVP	Check whether the actual battery voltage exceeds the battery charge cut-off voltage by more than 20V.

SYS red light is flashing fast.	100026		BAT_UVP	1. Check whether the actual battery voltage is lower than the battery discharge cut-off voltage. If the error persists, contact service for further check.
	100027		Battery_lose	1. Confirm whether the battery communication cable connection is normal. check whether the battery voltage sampling value is less than 75V. If the error persists, contact service for further check.
	100042		Out-put_short_circuit	1. Use a multimeter to test the impedance of the off-grid output. If it is low, check whether the wiring is correct. 2. Restart the inverter. If the error persists, contact service for further check.
	100043		Output_ overload	Check whether the load exceeds the rated power. 2. Restart the inverter. If the error persists, contact service for further check.

SYS red light is flashing fast.	100052		Backup_ovp	1. Restart the inverter. If the error persists, contact service for further check.
	100211		Para_CAN	Check the communication cables connection between inverters. If the error persists, contact service for further check.
	100213		Para_SW_Diff	Check the inverter software versions. If they are inconsistent, upgrade the inverters to the same software version.
	100214		Pa-ra_Module_Fault	Check parallel inverter mode settings. Only one host is allowed.
	100216		Para_Multi_Host	

Accessories Error Troubleshooting

LED Indicator	Error Code	LED Display	Description	Troubleshooting
SYS red light is on, METER light is flashing fast.	39		EV Charger Lost	EV Charger lost 1. Check whether the EV communication connection between the EV charger and the inverter is normal. 2. Check whether the batteries are switched on. If the error persists, contact service for further check.
	200000		Relay OTP	1. Unplug the charging connector of the EV charger, and wait for about 10 minutes before plugging it back in. If the error persists, contact service for further check.
	200001		Output overload	1. Check whether the load exceeds the rated power. 2. Restart the inverter. If the error persists, contact service for further check.
	200010		AC leakage current	1. Unplug the charging connector of the EV charger, and wait for about 10 minutes before plugging it back in. If the error persists, contact service for further check.

SYS red light is on, METER light is flashing fast.	200011		Input terminal OTP	1. Unplug the charging connector of the EV charger, and wait for about 10 minutes before plugging it back in. If the error persists, contact service for further check.
	200014		Relay abnormal	1. The EV charger has a hardware failure and need to be replaced, please contact service.
	200015		Ground fault	1. Check whether the grounding method is correct. If there is no grounding or the grounding method is wrong, please follow the correct grounding method.
	200016		Reverse phase	1. Shut off the leakage current protection switch in the power distribution cabinet immediately. 2. Check whether the AC input/output cable connection is normal, and verify whether there is an inverse connection of L/N input cables.

NOTICE

1. The four LEDs in the first row are system (SYS), battery (BAT), meter (METER), and communication (COM).

2. The five LEDs in the second row serve two functions:

1) During normal system operation, they indicate the SOC operation status of the batteries connected in this energy storage system.

2) During abnormal system operation, they display corresponding error codes. Each light represents a number, with values of 1, 2, 4, 8, and 16, from right to left.

10.2.2. Battery Protection Description for Parallel Battery

The three LED indicators on the left front provide information about the protection status of the battery.

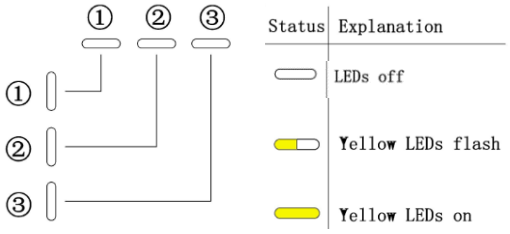

LED Display State	Description	Troubleshooting
	High temperature	Stop discharging and charging until this display state is eliminated and wait for the temperature to drop.
	Low temperature discharge	Stop discharging until this display state is eliminated and wait for the temperature to rise.
	Overcurrent charge	Wait for automatic recovery. If this protection state hasn't be solved, please call service.
	Overcurrent discharge	Wait for automatic recovery. If this protection state hasn't be solved, please call service.
	Cell under voltage	Stop discharging and call service immediately.
	Low temperature charge	Stop charging until this protection state is eliminated and wait for the temperature to rise.

NOTICE

During working mode, if the protection status "Cell under voltage"  appears, please press the power button of the battery 5 times within 10 seconds, the BMS will be forced to turn on the MOSFET of discharge so that the inverter can detect the battery's open voltage and begin charging the battery.

10.2.3. Battery Protection Description for Series Battery

The three LED indicators on the front cover provide information about the protection status of the battery.

 : Yellow LEDs flashing

 : Yellow LEDs on

 : Yellow LEDs off

LED Display State	Description	Troubleshooting
	Temperature difference	Wait for automatic recovery. If this protection state persists, please call service.
	High temperature	Stop discharging and charging until this protection state is eliminated and wait for the temperature to drop.
	Low temperature discharge	Stop discharging until this protection state is eliminated and wait for the temperature to rise.
	Overcurrent charge	Wait for automatic recovery. If this protection state hasn't be solved, please call service.
	Overcurrent discharge	
	Cell overvoltage	Wait for automatic recovery. If this protection state persists for a long time, please call service.
	Cell under voltage	Stop discharging and call service immediately.
	Low temperature charge	Stop charging until this protection state is eliminated and wait for the temperature to rise.

NOTICE

During work mode, if the protection status "Cell under voltage" appears, please take the following action:

First, switch off the breaker which is located on the left side of the battery, switch on the breaker and wait for 3~5S, switch off the breaker, then switch on the breaker and wait for 3~5S, switch off the breaker, at last switch on the breaker of the battery. The BMS will be forced to turn on the MOSFET of discharge so that the inverter can detect the battery's open voltage and begin charging the battery.

10.2.4. Battery Error Description

The three LED indicators on the front cover provide information about the error status of the battery.

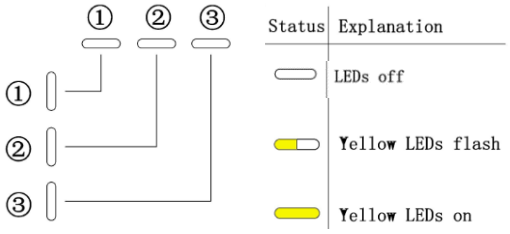

LED Display State	Description	Troubleshooting
	Hardware error	Wait for automatic recovery. If this error persists, please call service.
	Hardware error	
	Circuit breaker open	Switch on circuit breaker after powering off the battery.
	LMU disconnect (follower)	Reconnect the BMS communication cable.
	SN missing	Please call service.
	LMU disconnect (host)	Reconnect the BMS communication cable.
	Software version inconsistent	Please call service.
	Multi-host	Restart all batteries.
	MOS over temperature	Power off the battery and power on the battery after 30 minutes.
	Insulation fault	Restart battery. In case this error persists, please call service.
	Total voltage fault	Restart battery. In case this error persists, please call service.
	Precharge failure	Restart battery. In case this error persists, please call service.

11. System Removal & Return

11.1. Remove the Product

Procedure:

- **Step 1:** Power off the energy storage system as described in Chapter 8.2 Powering off the System.
- **Step 2:** Disconnect all cables from the system, including communication cables, PV power cables, battery power cables, AC cables, and PE cables.
- **Step 3:** Remove the Wi-Fi module.
- **Step 4:** Remove the cable covers of the inverter and the battery. Remove the top cover and right cover of the inverter.
- **Step 5:** Remove the inverter from the top of the battery.
- **Step 6:** Remove the battery wall brackets.
- **Step 7:** Remove the batteries.

11.2. Pack the Product

If the original packaging is available, put the product inside it and then seal it using adhesive tape.

If the original packaging is not available, put the product inside a suitable cardboard box and seal it properly.

11.3. Dispose of the Product

- If the product service life expires, dispose of it according to the local disposal rules for electrical equipment and electronic waste.
- Dispose of the packaging and replaced parts according to the rules at the installation site where the device is installed.
- Do not dispose the product with regular household waste.



12. Technical Data

12.1. Datasheet of Inverter SMILE-G3 Single Phase Inverter

Item	SMILE-G3-S5-INV	SMILE-G3-S3.6-INV	SMILE-G3-B5-INV
Input DC (PV Side)			
Recommended Max. PV Power	10000 W	7360 W	N/A
Max. PV Input Voltage	580 V		N/A
Rated Voltage	360 V		N/A
Start-up Voltage	90 V		N/A
MPPT Voltage Range	100 to 550 V		N/A
Max. Input Current per MPPT	15 A / 15 A		N/A
Max. Short Circuit Current per MPPT	18.75 A / 18.75 A		N/A
MPPT Number	2		N/A
Max. Input Strings Number per MPPT	1		N/A
Surge Category in accordance with IEC 62109-1	II		N/A
Battery			
Battery Type	LFP ($LiFePO_4$)		
Battery Voltage Range	80 to 450 V		
Max. Charge Power	5 kW	3.68 kW	5 kW
Max. Discharge Power	5 kW	3.68 kW	5 kW
Max. Charge/Discharge Current	60 A / 60 A		
Communication	CAN		
Output AC (Back-up Side)			
Rated Output Power	5 kW	3.68 kW	5 kW
Rated Apparent Output Power	5 kVA	3.68 kVA	5 kVA
Output Power > 60s	5.5 kW	4.0 kW	5.5 kW
Output Apparent Power > 60s	5.5 kVA	4.0 kVA	5.5 kVA
Output Power ≤ 30s	7.5 kW	5.5 kW	7.5 kW
Output Apparent Power ≤ 30s	7.5 kVA	5.5 kVA	7.5 kVA
Output Power ≤ 1s	10 kW	7.36 kW	10 kW
Output Apparent Power ≤ 1s	10 kVA	7.36 kVA	10 kVA
Back-up Switch Time	<20ms		
Rated Output Voltage	L/N/PE, 230 V		

Rated Frequency	50/60 Hz		
Rated Output Current	21.7 A	16 A	21.7 A
THDv (@Linear Load)	3%		
Input AC (Grid Side)			
Rated Output Voltage	L/N/PE, 230 V		
Rated Frequency	50/60 Hz		
Rated Input Power	10 kW	7.36 kW	10 kW
Max. Input Current	43.5 A	32 A	43.5 A
Output AC (Grid Side)			
Rated Output Power	5 kW	3.68 kW	5 kW
Rated Apparent Output Power	5 kVA	3.68 kVA	5 kVA
Operation Phase	Single Phase		
Rated Grid Voltage	L/N/PE, 230 V		
Grid Voltage Range	180 to 270 V		
Rated Grid Frequency	50 / 60 Hz		
Rating Grid Output Current	21.7 A	16 A	21.7 A
Power Factor	>0.99 (0.8 leading to 0.8 lagging)		
Protection Class	I		
Overvoltage Category	III		
Surge Category in accordance with IEC 60664-1	II		
Efficiency			
Max. Efficiency	>97%		
EU Efficiency	>96.2%		
Protection			
Anti-Islanding Protection	Integrated		
Insulation Resistor Detection	Integrated		
Residual Current Monitoring Unit	Integrated		
Output Over Current Protection	Integrated		
Output Short Protection	Integrated		

Output Overvoltage Protection	Integrated
PV Reverse Polarity Protection	Integrated
PV Overvoltage Protection	Integrated
PV Switch	Integrated
Battery Breaker	Integrated
General Data	
Dimensions (W*H*D)	610*366*212 mm
Weight	19.5kg
Topology	Transformerless
Operation Temperature Range	-25 to +60 °C
Max. Permissible Value for Relative Humidity (Condensing)	100%
Ingress Protection	IP65
Display	LED
Noise Emission	<30 dB(A) @1m
Cooling Method	Natural convection
Max. Operation Altitude	3000 m
Features	
PV Connection	Vaconn D4 connectors
Grid Connection	Vaconn plug-in connector
Backup Connection	Plug-in connector
BAT Connection	Screw terminal
Communication	LAN, Wi-Fi (optional)

12.2. Datasheet of Battery

12.2.1. Datasheet of Battery SMILE-G3-BAT-8.2P

Model	SMILE-G3-BAT-8.2P
Battery Type	LFP ($LiFePO_4$)
Weight	78.3 kg
Dimensions (W*H*D)	610*793*212 mm
Ingress Protection	IP21
Installed Energy	8.2 kWh
Usable Capacity	7.8 kWh
Depth of Discharge (DoD)	95%
Nominal Voltage	256 V
Operating Voltage Range	240 to 288 V
Max. Charge Current*	32 A
Max. Discharge Current*	32 A
Operating Temperature Range	Charge: 0＜T≤55℃ Discharge: -10＜T≤55℃
Monitoring Parameters	System voltage, current, cell voltage, cell temperature, PCBA temperature
BMS Communication	CAN
System	
Safety	IEC62619 / IEC63056 / IEC62040
Transportation	UN38.3

* Max. charge/discharge current derating may occur with changes in temperature and SOC.

12.2.2. Datasheet of Battery SMILE-G3-BAT-10.1P

Model	SMILE-G3-BAT-10.1P
Battery Type	LFP ($LiFePO_4$)
Weight	90 kg
Dimensions (W*H*D)	610*790*210 mm
Ingress Protection	IP65
Installed Energy	10.1 kWh
Usable Energy	9.6 kWh
Depth of Discharge (DoD)	95%
Nominal Voltage	96 V
Operating Voltage Range	90 to 108 V
Max. Charge Current*	60 A
Max. Discharge Current*	60 A
Operating Temperature Range	Charge: 0＜T≤50℃ Discharge: -10＜T≤50℃
Monitoring Parameters	System voltage, current, cell voltage, cell temperature, PCBA temperature
BMS Communication	CAN
System	
Safety	IEC62619 / IEC63056 / IEC62040
Transportation	UN38.3

* Max. charge/discharge current derating may occur with changes in temperature and SOC.

12.2.3. Datasheet of Battery SMILE-G3-BAT-3.6S

Model	SMILE-G3-BAT-3.6S
Battery Type	LFP ($LiFePO_4$)
Weight	43.2 kg
Dimensions (W*H*D)	610*435*212.5 mm
Ingress Protection	IP65
Installed Energy	3.6 kWh
Usable Energy	3.6 kWh
Depth of Discharge (DoD)	100%
Nominal Voltage	96 V
Operating Voltage Range	90 to 108 V
Max. Charge Current*	42 A
Max. Discharge Current*	42 A
Operating Temperature Range	Charge: 0＜T≤60℃ Discharge: -10＜T≤60℃
Monitoring Parameters	System voltage, current, cell voltage, cell temperature, PCBA temperature
BMS Communication	CAN
System	
Safety	IEC62619 / IEC63056 / IEC62040
Transportation	UN38.3

* Max. charge/discharge current derating may occur with changes in temperature and SOC.

SMILE-G3-BAT-3.6S is only for Greece market.

12.2.4. Datasheet of Battery SMILE-G3-BAT-3.8S

Model	SMILE-G3-BAT-3.8S
Battery Type	LFP ($LiFePO_4$)
Weight	38.5 kg
Dimensions (W*H*D)	610*435*212 mm
Ingress Protection	IP21
Installed Energy	3.84 kWh
Usable Energy	3.65 kWh
Depth of Discharge (DoD)	95%
Nominal Voltage	96 V
Operating Voltage Range	90 to 108 V
Max. Charge Current*	40 A
Max. Discharge Current*	40 A
Operating Temperature Range	Charge: 0＜T≤50℃ Discharge: -10＜T≤50℃
Monitoring Parameters	System voltage, current, cell voltage, cell temperature, PCBA temperature
BMS Communication	CAN
System	
Safety	IEC62619 / IEC63056 / IEC62040
Transportation	UN38.3

* Max. charge/discharge current derating may occur with changes in temperature and SOC.

12.2.5. Datasheet of Battery SMILE-G3-BAT-4.0S

Model	SMILE-G3-BAT-4.0S
Battery Type	LFP ($LiFePO_4$)
Weight	43.2 kg
Dimensions (W*H*D)	610*435*212.5 mm
Ingress Protection	IP65
Installed Energy	4.0 kWh
Usable Energy	3.8 kWh
Depth of Discharge (DoD)	95%
Nominal Voltage	96 V
Operating Voltage Range	90 to 108 V
Max. Charge Current*	42 A
Max. Discharge Current*	42 A
Operating Temperature Range	Charge: 0＜T≤60℃ Discharge: -10＜T≤60℃
Monitoring Parameters	System voltage, current, cell voltage, cell temperature, PCBA temperature
BMS Communication	CAN
System	
Safety	IEC62619 / IEC63056 / IEC62040
Transportation	UN38.3

* Max. charge/discharge current derating may occur with changes in temperature and SOC.

Appendix 1: System Wiring Diagrams

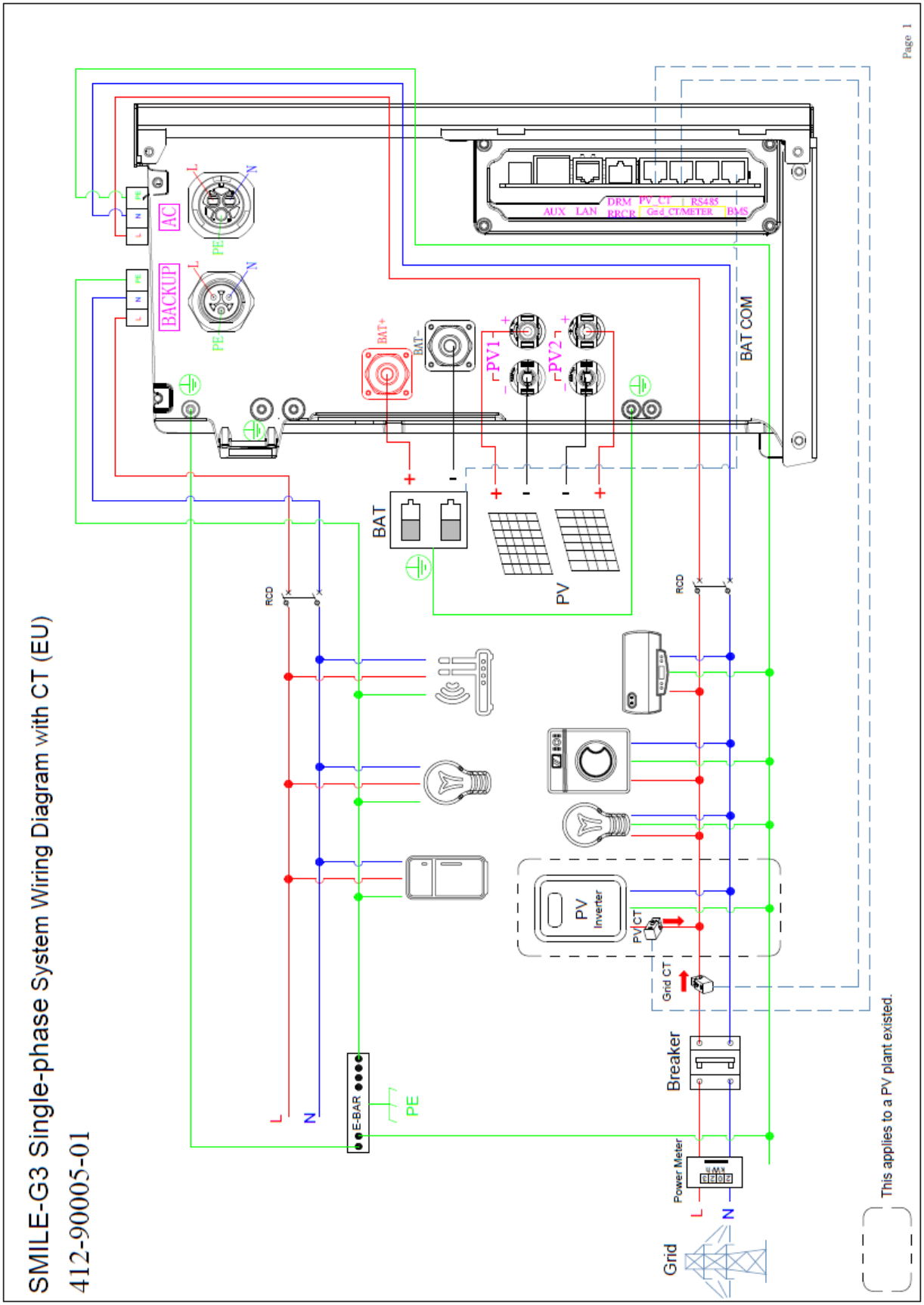

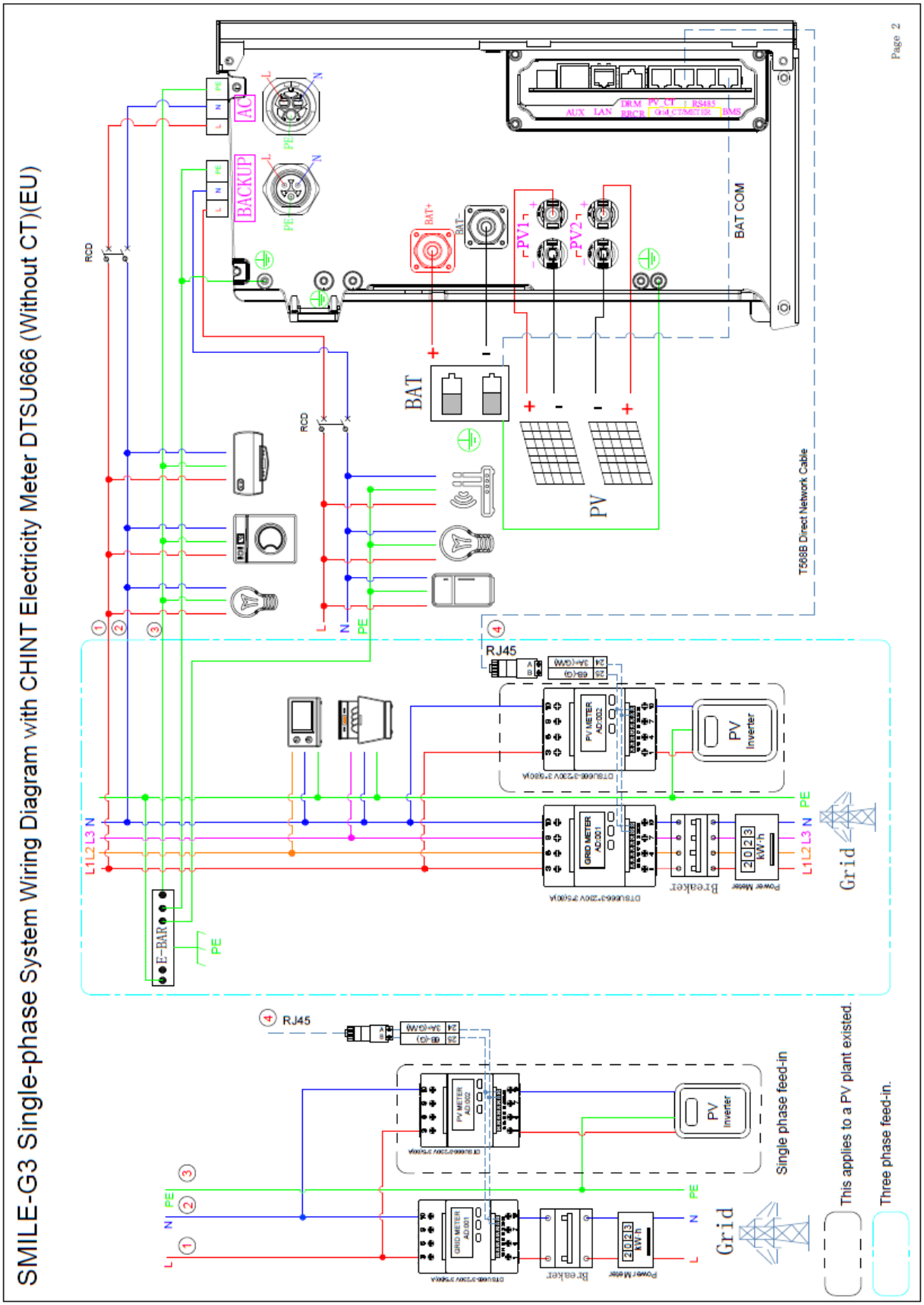
SMILE-G3 Single-phase System Wiring Diagram with CHINT Electricity Meter DTSU666 (Without CT)(EU)
Page 2
AC
BACKUP
RCD
BAT+
BAT-
PV1
PV2
BAT COM
BAT
PV
T568B Direct Network Cable
RJ45
PV METER AD:002
PV Inverter
GRID METER AD:001
Breaker
Power Meter
kWh
E-BAR
L1 L2 L3 N PE
Grid
Single phase feed-in
Three phase feed-in.
This applies to a PV plant existed.

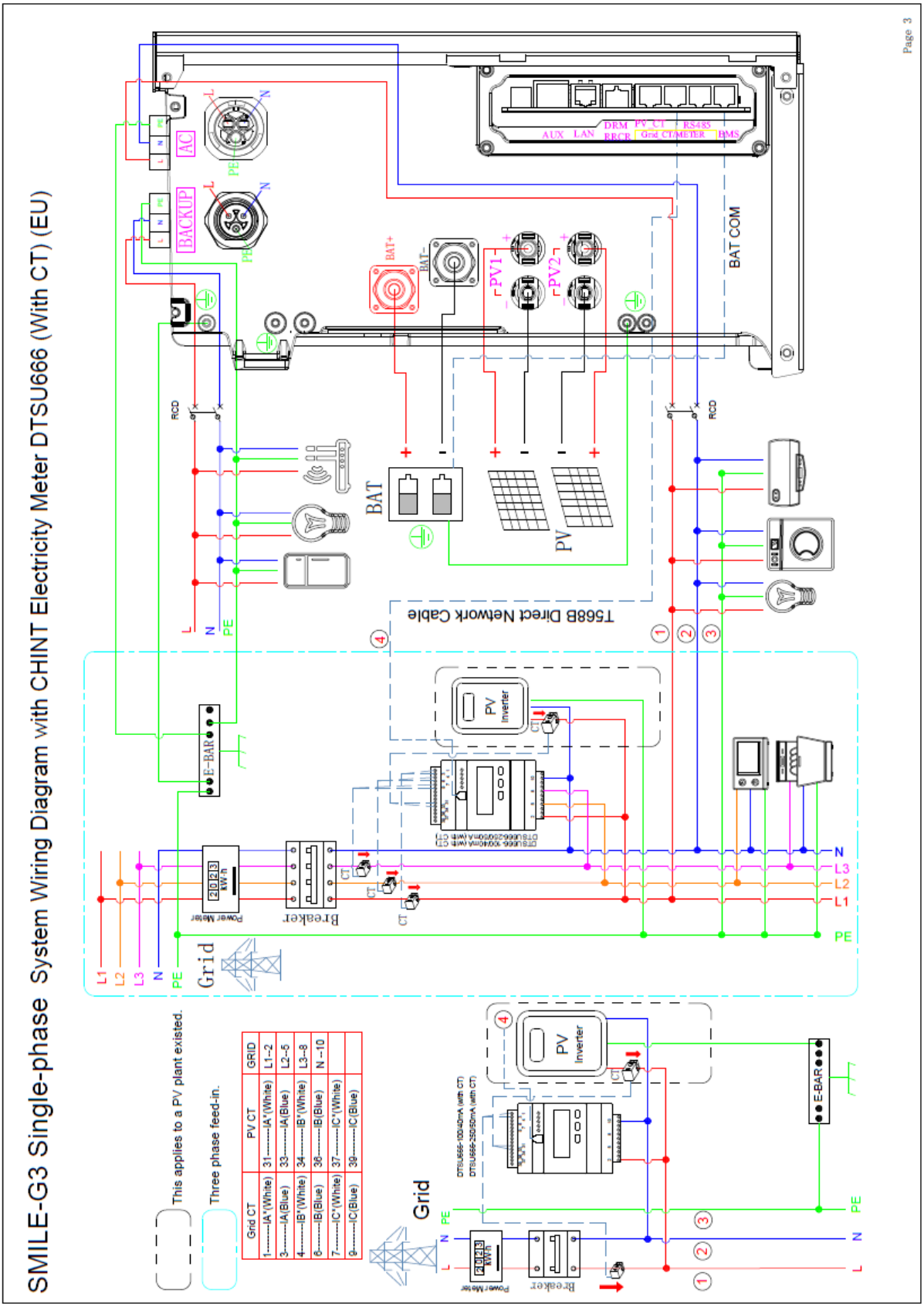
SMILE-G3 Single-phase System Wiring Diagram with CHINT Electricity Meter DTSU666 (With CT) (EU)
Page 3
AC
BACKUP
BAT+
BAT-
PV1
PV2
BAT COM
AUX LAN DRM RRCR PV CT RS485 Grid CT/METER BMS
RCD
BAT
PV
T568B Direct Network Cable
PV Inverter
E-BAR
Breaker
Power Meter
Grid
L1
L2
L3
N
PE
This applies to a PV plant existed.
Three phase feed-in.
Grid CT
PV CT
GRID
1------IA*(White) 31------IA*(White) L1--2
3------IA(Blue) 33------IA(Blue) L2--5
4------IB*(White) 34------IB*(White) L3--8
6------IB(Blue) 36------IB(Blue) N--10
7------IC*(White) 37------IC*(White)
9------IC(Blue) 39------IC(Blue)

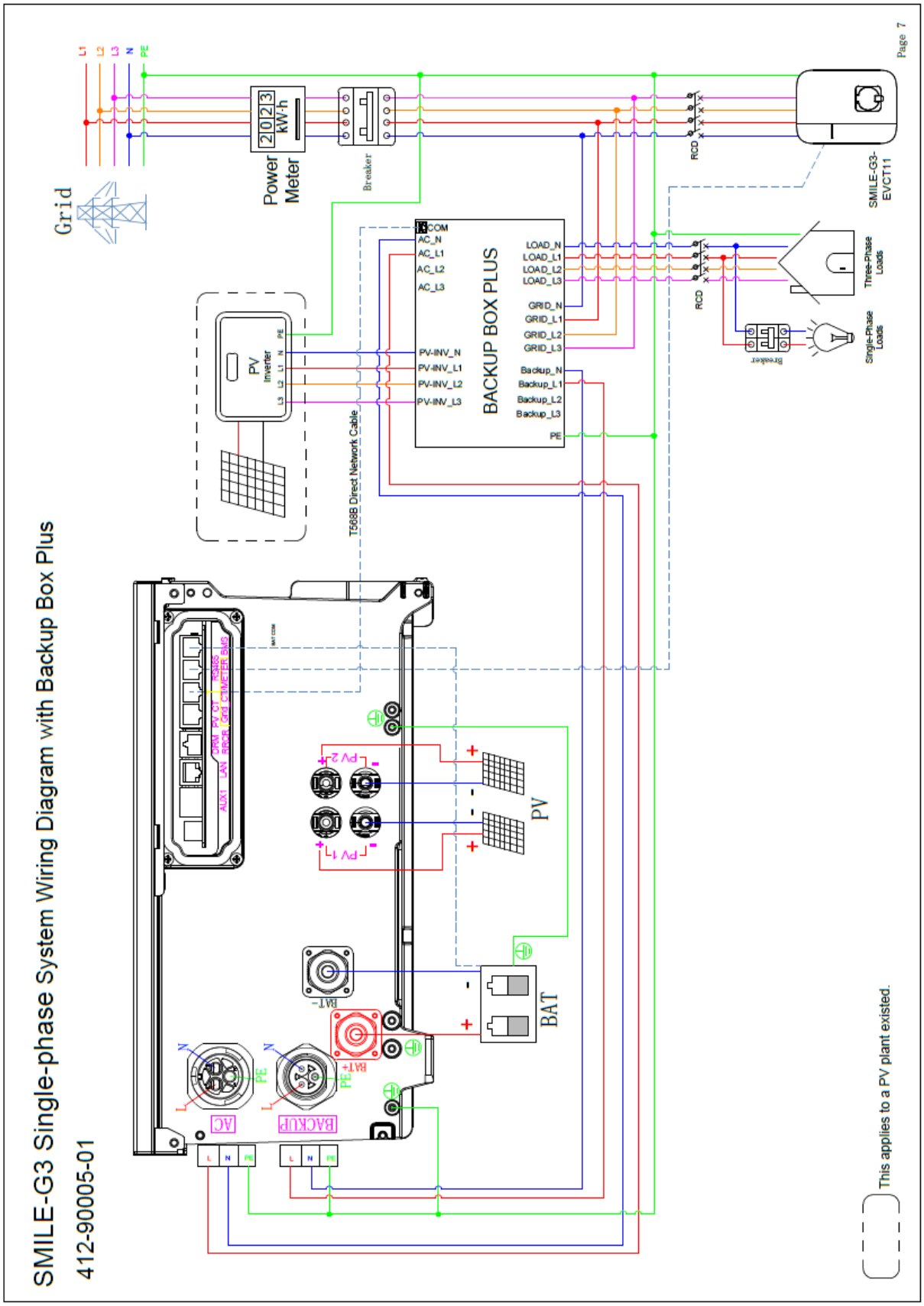
SMILE-G3 Single-phase System Wiring Diagram with Backup Box Plus
412-90005-01
Page 7
Grid
L1
L2
L3
N
PE
Power Meter
Breaker
RCD
SMILE-G3-EVCT11
BACKUP BOX PLUS
COM
AC_N
AC_L1
AC_L2
AC_L3
LOAD_N
LOAD_L1
LOAD_L2
LOAD_L3
GRID_N
GRID_L1
GRID_L2
GRID_L3
PV-INV_N
PV-INV_L1
PV-INV_L2
PV-INV_L3
Backup_N
Backup_L1
Backup_L2
Backup_L3
PE
PV Inverter
T568B Direct Network Cable
Three-Phase Loads
Single-Phase Loads
Breaker
PV 2+
PV 2-
PV 1+
PV 1-
PV
BAT-
BAT+
BAT
AC
BACKUP
This applies to a PV plant existed.

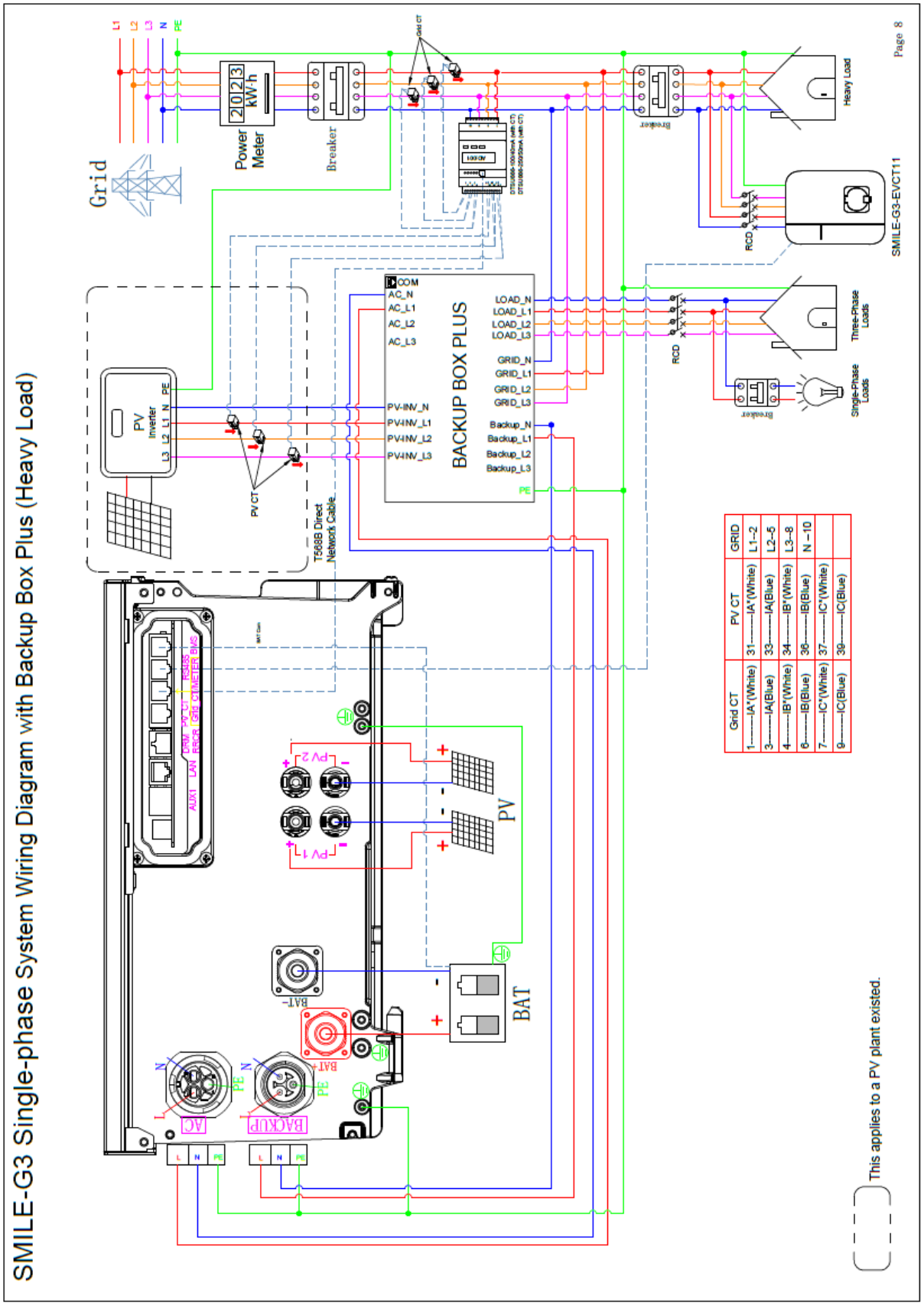
SMILE-G3 Single-phase System Wiring Diagram with Backup Box Plus (Heavy Load)
Page 8
Grid
Power Meter
Breaker
Heavy Load
SMILE-G3-EVCT11
RCD
BACKUP BOX PLUS
COM
AC_N
AC_L1
AC_L2
AC_L3
LOAD_N
LOAD_L1
LOAD_L2
LOAD_L3
GRID_N
GRID_L1
GRID_L2
GRID_L3
PV-INV_N
PV-INV_L1
PV-INV_L2
PV-INV_L3
Backup_N
Backup_L1
Backup_L2
Backup_L3
PE
PV Inverter
PV CT
T568B Direct Network Cable
Three-Phase Loads
Single-Phase Loads
PV
BAT
AC
BACKUP
Grid CT
PV CT
GRID
This applies to a PV plant existed.

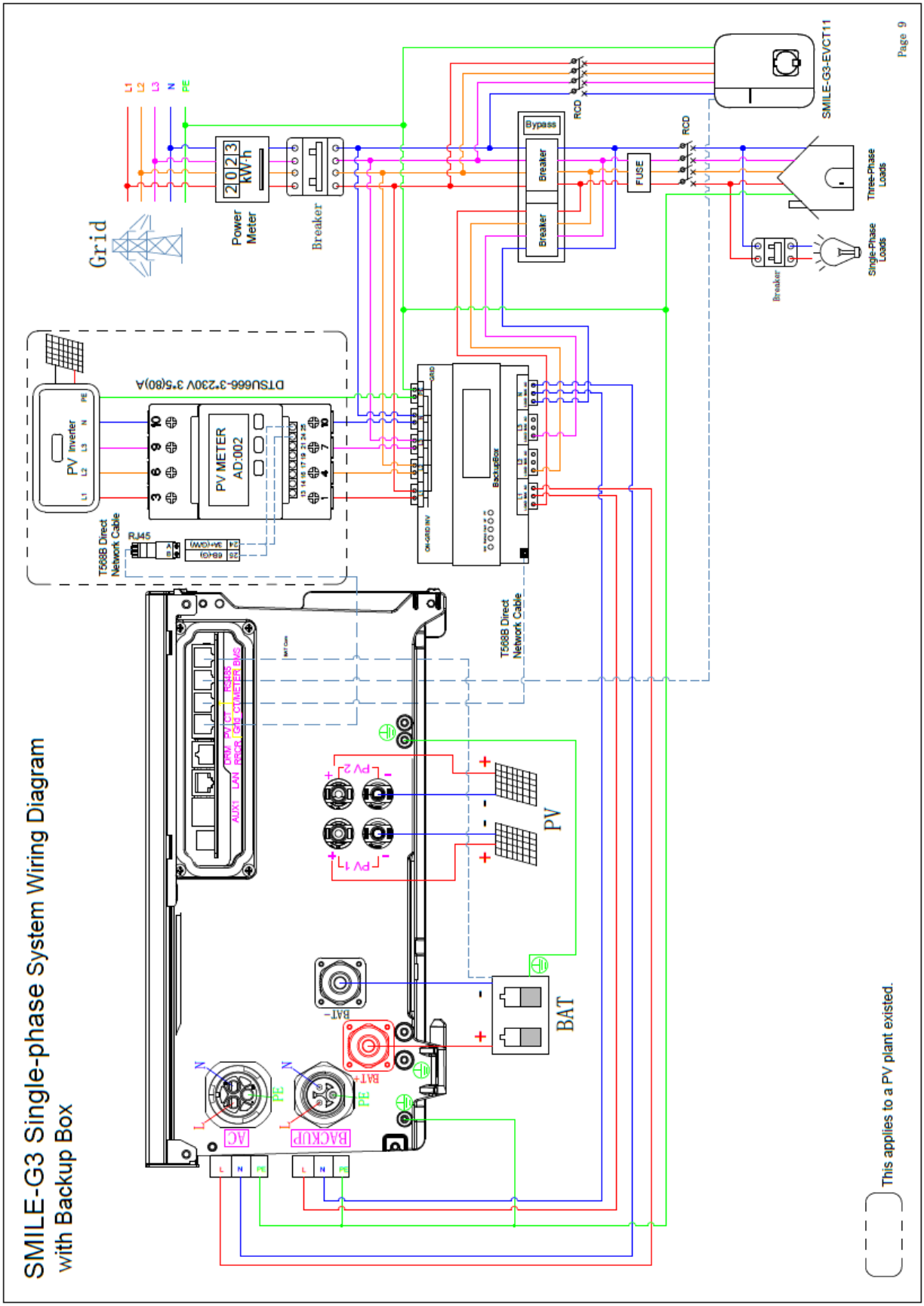
SMILE-G3 Single-phase System Wiring Diagram
with Backup Box
Page 9
Grid
Power Meter
Breaker
Bypass
RCD
FUSE
SMILE-G3-EVCT11
Three-Phase Loads
Single-Phase Loads
PV Inverter
PV METER AD:002
DTSU666-3*230V 3*5(80)A
T568B Direct Network Cable
RJ45
BackupBox
PV
BAT
AC
BACKUP
This applies to a PV plant existed.

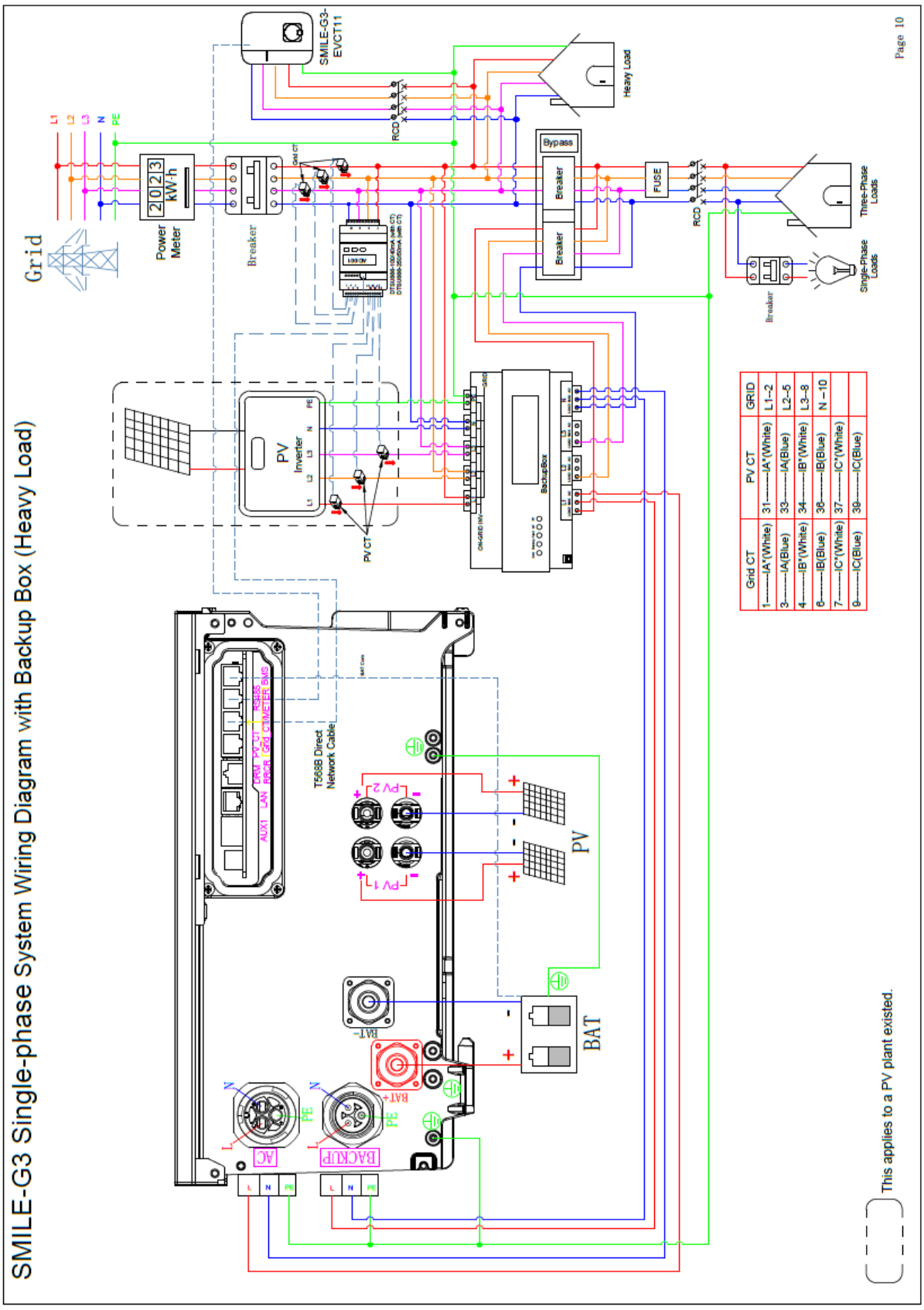
SMILE-G3 Single-phase System Wiring Diagram with Backup Box (Heavy Load)
Page 10
Grid
Power Meter
Breaker
SMILE-G3-EVCT11
Heavy Load
Bypass
Breaker
Breaker
FUSE
RCD
RCD
Three-Phase Loads
Single-Phase Loads
Breaker
PV Inverter
PV CT
BackupBox
T568B Direct Network Cable
PV
BAT
AC
BACKUP
This applies to a PV plant existed.
Grid CT
1——IA*(White)
3——IA(Blue)
4——IB*(White)
6——IB(Blue)
7——IC*(White)
9——IC(Blue)
PV CT
31——IA*(White)
33——IA(Blue)
34——IB*(White)
36——IB(Blue)
37——IC*(White)
39——IC(Blue)
GRID
L1–2
L2–5
L3–8
N –10

Appendix 2: Regional Application Standard

Please check with your local grid company and choose the corresponding regional application standard, the power quality modes Volt-VAR and Volt-Watt will be running automatically. (Only for regions with AS/NZW 4777.2 safety standard)

Regional Application Standard	Electric Company
Australia A	N/A
Australia B	N/A
Australia C	N/A
New Zealand	N/A
Vector	New Zealand Vector

@AlphaEnergyStorageSystem @AlphaESS @alpha_ess @AlphaESS www.alphaess.com

Alpha ESS Co., Ltd.

+86 513 8060 6891
info@alpha-ess.com
www.alphaess.com
No. 1086 Bihua Road, Tongzhou District, Nantong City, Jiangsu Province, China

Alpha ESS International Pte. Ltd.

+65 6513 1125 / +65 6513 1126
Singapore@alpha-ess.com
2 Corporation Road #01-06A Corporation Place 618494 Singapore

Alpha ESS Europe GmbH

+49 610 3459 1601
europe@alpha-ess.de
www.alphaess.de
Paul-Ehrlich-Straße 1a, Langen, Hessen D-63225 Germany

Alpha ESS Australia Pty. Ltd.

+61 02 9000 7676
techsupport@alphaess.au
www.alphaess.au
8/15-21 Gibbes Street, Chatswood, NSW 2067 Australia

Alpha ESS UK Co., Ltd

+44 330 043 2610
info@alpha-ess.com
Drake house, Long street, Dursley, gl11 4hh UK

Alpha ESS Italy S.r.l.

+39 339 462 4288
info@alpha-ess.it
www.alphaess.it
Via Don Minzoni, 17, Calenzano Firenze 50041 Italy

Alpha ESS NZ Ltd.

+64 0800 769 377
info@alpha-ess.com
www.alpha-ess.co.nz
19 Arrenway Drive, Albany, 0630, New Zealand

Alpha ESS USA, Inc.

+1 800 220 0725 (Service Inquiries)
service@alphaess.us
www.alphaess.us
2180 S Ivanhoe St. Unit 5 Denver.CO 80222 USA

Alpha ESS South Africa (Pty.) Ltd.

+27 010 745 5653
measervice@alpha-ess.com
Johannesburg, South Africa

Alpha ESS Korea Co., Ltd

info@alpha-ess.com
2F, 19-4, Nohyeong 11-gil, Jeju-si, Jeju-do, Republic of Korea

Alpha ESS Japan, Inc.

info@alpha-ess.com
www.alphaess.jp