@AlphaEnergyStorageSystem @AlphaESS @alpha_ess @AlphaESS www.alphaess.com

Alpha ESS Co., Ltd.
+86 513 8060 6891
info@alpha-ess.com
www.alphaess.com
Jiuhua Road 888, Nantong High-Tech Industrial Development Zone, Nantong, Jiangsu Province, China

Alpha ESS Suzhou Co., Ltd.
+86 512 6828 7609
info@alpha-ess.com
www.alphaess.com
Building 10-A, Canal Town Industrial Park, 99 Taihu E Rd, Wuzhong District, Suzhou, Jiangsu Province, China

Alpha ESS Europe GmbH
+49 610 3459 1601
europe@alpha-ess.de
www.alpha-ess.de
Paul-Ehrlich-Straße 1a, Langen, Hessen D-63225 Germany

Alpha ESS Australia Pty. Ltd.
+61 02 9000 7676
echsupport@alphaess.au
www.alphaess.com
8/15-21 Gibbes Street, Chatswood, NSW 2067 Australia

Alpha ESS Italy S.r.l.
+39 339 462 4288
info@alpha-ess.it
Via Don Minzoni, 17, Calenzano Firenze 50041 Italy

Alpha ESS Korea Co., Ltd
+82 64 721 2004
info@alpha-ess.com
2F, 19-4, Nohyeong 11-gil, Jeju-si, Jeju-do, Republic of Korea

Alpha ESS UK Ltd.
+44 145 354 5222
info@alpha-ess.com
Drake house, Long street, Dursley, gl11 4hh UK

Alpha ESS International Pte. Ltd.
+65 6513 1125 / +65 6513 1126
Singapore@alpha-ess.com
2 Corporation Road #01-06A Corporation Place 618494 Singapore

Alpha ESS USA, Inc.
+1 408 368 7828
usa@alpha-ess.com
Unit 5 2180 S Ivanhoe St, Denver, CO 80222 USA

Alphaess
your smart energy

V04

INSTALLATION MANUAL ENERGY STORAGE SYSTEM (ESS)

SMILE-B3-PLUS



Copyright Statement

This manual is under the copyright of AlphaESS Co., Ltd. with all rights reserved. Please keep the manual properly and operate in strict accordance with all safety and operating instructions in this manual. Please do not operate the product before read-ing through the manual.

CONTENT

01 INFORMATION ON THIS DOCUMENT 01

1.1 Content and Structure of this Document 01
1.2 Target Group 01
1.3 Levels of Warning Messages 01
1.4 Nomenclature 02

02 SAFETY 03

2.1 Intended Use 03
2.2 Safety Precaution for Battery Pack 03
2.3 Important Safety Instructions 05
2.4 Symbols on the label 07

03 PRODUCT INTRODUCTION AND APPLICATION SCENARIOS 09

3.1 Product Description 09
3.2 Application Scenarios 10

04 STORAGE 12

4.1 Product Storage 12

05 UNPACKING 13

5.1 Checking the Outer Packing 13
5.2 Scope of Delivery 13

06 MOUNTING 15

6.1 Requirements for Mounting 15
6.2 Preparing Tools and Instruments 17
6.3 Mounting Inverter and Expansion Battery Pack 18

07 ELECTRICAL CONNECTION 25

7.1 Overview of the Connection Area 25
7.2 Preparing Cables 27
7.3 Connecting Additional Grounding 27
7.4 AC Connection 28
7.5 Meter & CT Connection 32
7.6 Communication Connection 37

7.7 Electrical Connection of Expansion Battery Packs 39
7.8 Mounting the Cable Box Cover 41

08 WIFI SETTING 42

8.1 Download and Install APP 42
8.2 Overview of Functions for Installer Account 43
8.3 WiFi Module Setting 44

09 COMMISSIONING 46

9.1 Checking Before Power-On 46
9.2 Check the Running State 46
9.3 Powering Off the Product 47

10 MAINTENANCE AND TROUBLESHOOTING 48

10.1 Routine Maintenance 48
10.2 Troubleshooting 49

11 UNINSTALLATION & RETURN 54

11.1 Removing the Product 54
11.2 Packing the Product 54
11.3 Disposing of the Product 54

12 SPECIFICATION 55

12.1 Technical Data of SMILE-B3-PLUS 55
Appendix: Communication Connection Figure 58

01 Information on this Document

1.1 Content and Structure of this Document

This document is valid for product of SMILE-B3-PLUS (SMILE-B3-PLUS II, SMILE-B3-PLUS III, SMILE-B3-PLUS IV, SMILE-B3-PLUS V, SMILE-B3-PLUS VI) which has integrated 3 kW AC-coupled inverter with 1~6 battery packs -- SMILE-BAT-5P.
This document describes the installation, commissioning, configuration, operation, troubleshooting and decommissioning of the product .
Comply with the provisions of all documents shipped with the product, and keep them properly to ensure that they are available at any time.
The illustrations in this document are abbreviated versions, which may deviate from the actual product

1.2 Target Group

This document is intended for qualified persons and end users. Only qualified per-sons are allowed to perform the operations marked with a warning symbol in this document. Tasks that do not require any specific qualifications will not be marked and can be performed by the end user. Qualified persons must have

- knowledge of working principle of inverters.
- knowledge of how to deal with the dangers and risks associated with installing and using electrical devices, batteries and systems.
- knowledge of the installation and commissioning of electrical devices and systems.
- knowledge of the applicable standards and directives.
- understood and complied with this document, including all safety precautions.
- understood and complied with the documents of the battery manufacturer, including all safety precautions.

1.3 Levels of Warning Messages

The following levels of warning messages may occur when handling the product.

DANGER

DANGER indicates a hazardous situation which, if not avoided, will result in death or serious injury.

WARNING

WARNING indicates a hazardous situation which, if not avoided, could result in death or serious injury.

CAUTION

CAUTION indicates a hazardous situation which, if not avoided, could result in minor or moderate injury.

NOTICE

NOTICE indicates a situation which, if not avoided, can result in property damage.

INFORMATION provides tips which are valuable for the optimal installation and operation of the product.

1.4 Nomenclature

Complete designation	Designation in this document
SMILE-BAT-5P	Battery Pack

02 Safety

2.1 Intended Use

The SMILE-B3-PLUS, expandable battery packs (SMILE-BAT-5P) and the ener-gy meters make up a system for optimization of self-consumption for a house-hold.
The inverter can achieve bidirectional transfer between AC current and DC current. The battery pack is used for the energy storage .
The product is suitable for indoor and outdoor installation
All components must operate in a scenario suitable for their operation.
Be sure to use this product in accordance with the information provided in the accompanying documents and local applicable standards and directives. Any other operation may cause personal injury or property damage.
Alterations to the product, e.g. changes or modifications, are only permitted with the express written permission of AlphaESS. Unauthorized alterations will void guarantee and warranty claims. AlphaESS shall not be held liable for any damage caused by such changes.
Any use of the product other than that described in the Intended Use section does not qualify as appropriate.
The enclosed documentation is an integral part of this product. Keep the documentation in a convenient place for future reference and comply with all instructions contained therein.
The type label must remain permanently attached to the product.

2.2 Safety Precaution for Battery Pack

2.2.1 General Safety Precautions

Overvoltage or wrong wiring can damage the battery pack and cause deflagration, which can be extremely dangerous.
All types of breakdown of the battery may lead to a leakage of electrolyte or flammable gas.
Battery pack is not user-serviceable. There is high voltage in the device.
Read the label with Warning Symbols and Precautions, which is on the right side of the battery pack.
Do not connect any AC conductors or PV conductors directly to the Battery Pack which should be only connected to the Inverter.
Do not charge or discharge damaged battery.
Do not damage the battery pack in such ways as dropping, deforming, impacting, cutting or penetrating with a sharp object. It may cause a leakage of electrolyte or fire.
Do not expose battery to open flame.

2.2.2 Response to Emergency Situations

The battery pack is composed of multiple batteries and designed to prevent the danger caused by malfunction.

★ If the user touches the inner material of the battery cells due to damage to the shell, the following actions are recommended.
Inhalation: Leave the contaminated area immediately and seek medical attention.
Eye injuries : Rinse eyes with running water for 15 minutes and seek medical attention.
Skin injuries : Wash the contacted area with soap thoroughly and seek medical attention.
Ingestion: Induce vomiting and seek medical attention.

If a fire breaks out in the place where the battery pack is installed, perform the following countermeasures:

★ Fire extinguishing media
Respirator is not required during normal operations.
Use FM-200 or CO2 extinguisher for battery fire.
Use an ABC fire extinguisher, if the fire is not from battery and not spread to it yet.

★ Firefighting instructions
1. If fire occurs when charging batteries, if it is safe to do so, disconnect the battery pack circuit breaker to shut off the power to charge.
2. If the battery pack is not on fire yet, extinguish the fire before the battery pack catches fire.
3. If the battery pack is on fire, do not try to extinguish but evacuate people immediately.

⚠ WARNING

There may be a possible explosion when batteries are heated above 150°C.
When the battery pack is burning, it leaks poisonous gases. Do not approach.

★ Effective ways to deal with accidents
On land: Place damaged battery into a segregated place and call local fire department or service engineer.
In water: Stay out of the water and don't touch anything if any part of the battery, inverter, or wiring is submerged.
Do not use submerged battery again and contact the service engineer.

2.3 Important Safety Instructions

This section contains safety precautions that must be observed at all times when working on or with the product.
To prevent personal injury and property damage and to ensure longterm operation of the product, please read this section carefully and follow all safety precautions at all times.

⚠ DANGER

Danger to life due to electric shock when live components or cables are touched

High voltages are present in the conductive components or cables of the product. Touching live parts and cables results in death or lethal injuries due to electric shock.

★ Do not touch non-insulated parts or cables.
★ Disconnect the product from voltage sources and make sure it cannot be reconnected before working on the inverter or the battery pack.
★ After disconnection, wait for 5 minutes until the capacitors have discharged.
★ Do not open the product.
★ Wear suitable personal protective equipment for all operations on the product.

⚠ DANGER

Danger to life due to electric shock when touching live system components in case of a ground fault

If a ground fault occurs, parts of the system may still be live. Touching live parts and cables results in death or lethal injuries due to electric shock.

★ Disconnect the product from voltage sources and make sure it cannot be reconnected before working on the device.

⚠ DANGER

Danger to life due to high voltages on the battery pack

Lethal voltage is present at the pin connector for the power cable. Reaching into the pin connector for the power cable can result in lethal electric shock.

★ Do not open the battery pack.
★ Do not wipe over the battery pack with a damp cloth.
★ Leave the protective caps on the pin connectors for the batteries power connection until the inverter cables are connected to the battery pack.
★ Disconnect the product from voltage sources and make sure it cannot be reconnected before working on the inverter or the battery pack.

WARNING

Risk of chemical burns from electrolyte or toxic gases

During normal operation, no electrolyte would leak from the battery pack and no toxic gases would form. Despite careful construction, if the battery pack is damaged or a fault occurs, it is possible that electrolyte may be leaked or toxic gases may form.

- Store the battery pack in a cool and dry place.
- Do not drop the battery pack or damage it with sharp objects.
- Only set the battery pack down on its back or its bottom.
- Do not open the battery pack.
- Do not install or operate the battery pack in potentially explosive atmosphere or areas of high humidity.
- If moisture has penetrated the battery pack (e.g. due to a damaged housing), do not install or operate the battery pack.
- In case of contact with electrolyte, rinse the affected areas immediately with water and consult a doctor without delay.

CAUTION

Risk of burns due to hot heatsink and housing

The heatsink and housing can get hot during operation.

- During operation, do not touch any parts other than the cover of the inverter.

NOTICE

Damage to the inverter due to electrostatic discharge

- Touching electronic components can cause damage to or destroy the inverter through electrostatic discharge.
- Ground yourself before touching any component.

NOTICE

Damage due to cleaning agents

The use of cleaning agents may cause damage to the product and its components.

- Clean the product and all its components only with a cloth moistened with clear water.

2.4 Symbols on the Label

Symbols on the type label of the inverter

Symbol	Explanation
	Beware of a danger zone This symbol indicates that the product must be additionally grounded if additional grounding or equipotential bonding is required at the installation site.
	Beware of electrical voltage The product operates at high voltages.
	Beware of hot surface The product can get hot during operation.
	Danger to life due to high voltages in the inverter, observe a waiting time of 5 minutes. High voltages that can cause lethal electric shocks are present in the live components of the inverter. Prior to performing any work on the inverter, disconnect it from all voltage sources as described in this document.
	WEEE designation Do not dispose of the product together with the household waste but in accordance with the disposal regulations for electronic waste applicable at the installation site.
	Observe the documentation
	Certified safety The product is TUV-tested and complies with the requirements of the EU Equipment and Product Safety Act.
	CE marking The product complies with the requirements of the applicable EU directives.
	RCM (Regulatory Compliance Mark) The product complies with the requirements of the applicable Australian standards.

Symbols on the type label and warning label of the battery pack

Symbol	Explanation
	Beware of a danger zone This symbol indicates that the product must be additionally grounded if additional grounding or equipotential bonding is required at the installation site.
	Beware of electrical voltage The product operates at high voltages.
	Risk of chemical burns.
	Risk of explosion.
	Observe the documentation
	Risk of electrolyte leakage.
	CE marking The product complies with the requirements of the applicable EU directives.
	Refer to the instruction for operation.
	Use eye protection.
	Fire, naked light and smoking prohibited.
	No nearing.
	Do not dispose of the battery pack together with the household waste but in accordance with the locally applicable disposal regulations for batteries.
	Recycling code.
UN38.3	Marking for transport of dangerous goods The product passes the certifications of the UN38.3

03 Product Introduction and Application Scenarios

3.1 Product Description

Appearance and Dimensions (mm)

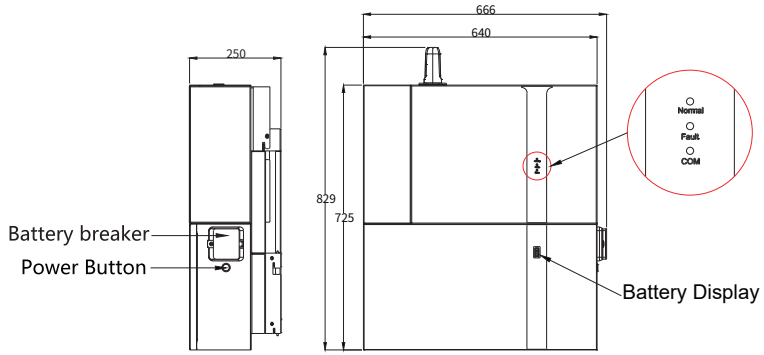

Inverter LED Signals

LED Indictor	Status	Description
Normal		On: system is in working mode normally
		Flicker: system is in standby mode or self-checking process
		Off: system is in fault mode or off
Fault		Off: system is in working mode normally or off
		On: system is in fault mode
COM		On: network connection is normal
		Flicker: connecting to the server
		Off: system is not connected network
		Flicker: find available wifi, red light flickers once a second (have found wifi module, but have not configured router)
		Normally on: connect to router (router configuration is done, but have not connected to server)

Battery LED Signals

Different colors represent different states:
green for SOC state
yellow for protection state
red for error state.

The LED indicators provide information about the SOC operational status of the battery pack.

	SOC Status	Description
SOC Instruction		SOC<5%
		5%=<SOC<25%
		25%=<SOC<50%
		50%=<SOC<75%
		75%=<SOC<95%
		SOC>95%
The LED Border Flashes Status		Standby mode: The green light flashes every second Work mode: The green light flashes every 10 seconds

3.2 Application Scenarios

SMILE-B3-PLUS is an AC-coupled all-in-one battery energy storage system (BESS). It can help to achieve the optimal usage of renewable energy. SMILE-B3-PLUS can control the bi-directional flow of electric power, work under auto/manual & time-of-use (TOU) modes, charge/discharge the battery as per customer' s setting. Under the auto mode, SMILE-B3-PLUS stores surplus renewable energy onto the battery and discharge battery to supply power to local loads when renewable energy is not enough.

The standard schematic is as below:

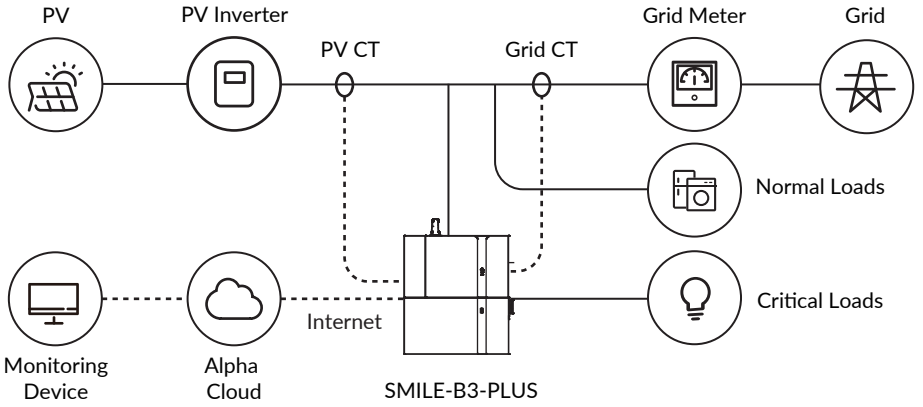

Figure 3.1 SMILE-B3-PLUS System with PV

NOTE

For the AC coupled system with PV, if only install Grid CT, the system cannot display power generated by PV inverter, electric energy production etc.

If there is no PV, the schematic is as below:

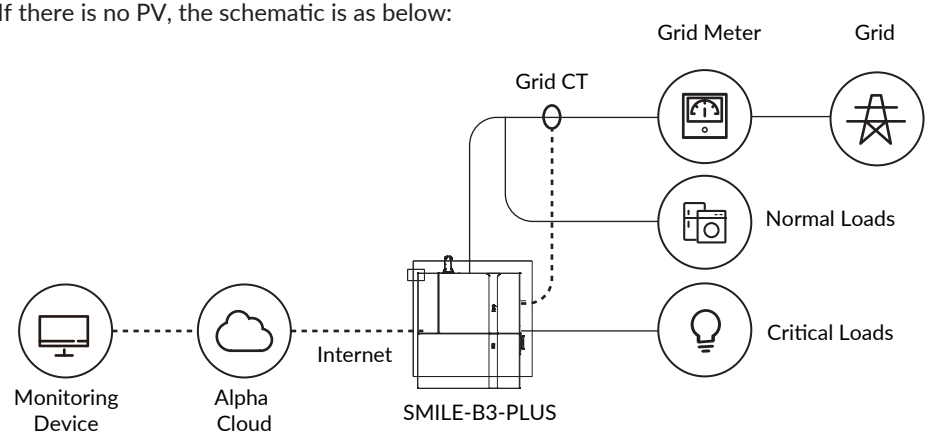

Figure 3.2 SMILE-B3-PLUS System without PV

04 Storage

4.1 Product Storage

The following requirements should be met if the product is not put into use directly:
1. Do not unpack the product.
2. The product should be stored in a clean and dry place and be protected from dust and water vapor corrosion.
3. Place product according to the signs on the packing case during storage
A maximum of 2 layers can be stacked. To avoid personal injury or device damage, stack products with caution to prevent them from falling over.
4. Store the product out of reach of children and animals.
5. Handle product with caution to avoid damage.
6. The storage environment requirements are as follows:
– Ambient temperature: -10~55°C, recommended storage temperature: 15~30°C
– Relative humidity: 15%~ 85%
– Place products in a place that is away from corrosive organic solvents and gases.
– Keep products away from direct sunlight.
– Keep products at least 2 meters away from heat sources.
8. The product in storage must be disconnected from external devices. The indica-tors (if any) on the products should be off.
9. Products should be delivered based on the "first in, first out" rule.
10. The warehouse keeper should collect battery storage information every month and periodically report the battery inventory information to the planning department. The batteries that have been stored for nearly 6 months should be recharged timely.
11. If a lithium battery is stored for a long time, capacity loss may occur. After a lithi-um battery is stored for 12 months in the recommended storage temperature, the irreversible capacity loss rate is 3%~10%. It is recommended that batteries not be stored for a long period. If the batteries need to be stored for more than 6 months, it is recommended to recharge the batteries to 65 ～ 75% of the SOC. For example, they should be recharged every 6 months at least, and must be recharged to at least 50% of the SOC.

05 Unpacking

5.1 Checking the Outer Packing

Before unpacking the battery pack and inverter, check the outer packing for damage, such as holes and cracks. If any damage is found, do not unpack the product and contact your distributor as soon as possible.

5.2 Scope of Delivery

Check the scope of delivery for completeness and any externally visible damage. Contact your distributor if the scope of delivery is incomplete or damaged.

SMILE-B3-PLUS				
	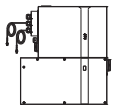	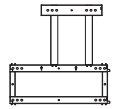	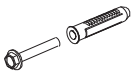	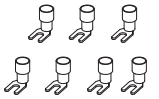
Carton (X1)	SMILE-B3-PLUS (X1)	Wall Bracket (X1)	Wall Anchor ST6*55 (X8)	Cord End Terminal (X7)
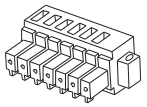	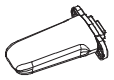	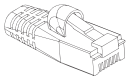	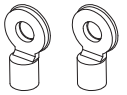	
6 Pin Terminal Block (X1)	WiFi Module (X1) Optional	Terminal Resistor (X1)	Ring Terminal Lug (X2)	T20 Screwdriver (X1)
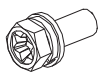	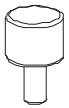	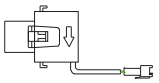	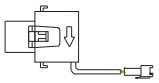	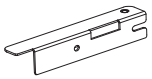
Screw M5*10 (X2) Screw M6*16 (X6) Screw M4*12 (X10)	Screw M4 (X1)	PV CT (X1)	Grid CT (X1)	Holder for Cable Box Cover (X2)
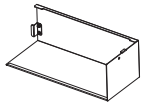	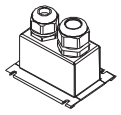			
Cable Box Cover (X1)	AC Connection Cover (X1)	Installation Manual (X1)		

SMILE-BAT-5P				
		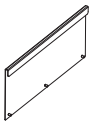	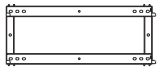	
Positive Power Cable (X1) Negative Power Cable (X1)	Communication Cable (X1)	Side Cover (X1)	Battery Wall Bracket (X1)	Expansion Bracket (X2)
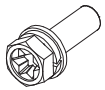				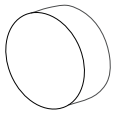
Screw M6*16 (X4) Screw M5*12 (X1)	Wall Anchor ST6*55 (X8)	M4 Flange (X15)	User Manual (X1)	Silicone Plug (X8)

06 Mounting

6.1 Requirements for Mounting

WARNING

Danger to life due to fire or explosion
Despite careful construction, electrical devices can cause fires.

- ★ Do not mount the product in areas containing highly flammable materials or gases.
- ★ Do not mount the product in potentially explosive atmospheres.

Basic Requirements

- ★ SMILE-B3-PLUS and SMILE-BAT-5P are suitable for indoor and outdoor use.
- ★ Do not install the product in a place where a person can easily touch it because its housing and heatsink are hot during operation.
- ★ Do not mount the product in areas with flammable or explosive materials.
- ★ Do not mount the product at a place within children's reach.
- ★ Do not mount the product outdoors in salt areas because it will be corroded there and may cause fire. A salt area refers to the region within 200-300m from the coast or prone to sea breeze. The regions prone to sea breeze vary depending on weather conditions (such as typhoons and monsoons) or terrains (such as dams and hills).

Mounting Environment Requirements

- ★ The product must be mounted in a well-ventilated environment to ensure good heat dissipation.
- ★ When mounted under direct sunlight, the power of the product may be derated due to additional temperature rise.
- ★ Mount the product in a sheltered place or mount an awning over the product.
- ★ The optimal temperature range for the battery pack to operate is from15 to 30℃.
- ★ Do not expose or place near water sources like downspouts or sprinklers.
- ★ If the battery pack is mounted in the garage, then ensure that it is above the height of the vehicle bumper and/ or door.

Mounting Structure Requirements

- ★ The mounting structure where the product is mounted must be fireproof.
- ★ Do not mount the product on flammable building materials.
- ★ Ensure that the mounting surface is solid enough to bear the weight load.
- ★ In residential areas, do not mount the product on drywalls or walls made of similar materials which have a weak sound insulation performance because the noise generated by the product is noticeable.

Mounting Angle and Stack Requirement

SMILE-B3-PLUS and SMILE-BAT-5P should be mounted on the wall.
The installation angle requirement is as follow:

- Do not mount the product at forward tilted, side tilted, horizontal, or upside down positions.

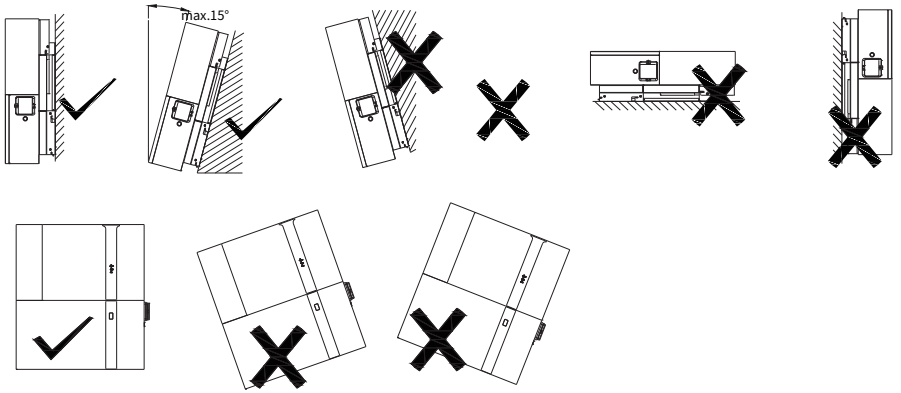

Mounting Space Requirements

NOTICE

- Reserve sufficient clearance around the system to ensure sufficient space for installation,maintenance and heat dissipation.
- The space between the left and right batteries is the recommended distance. which can be adjusted according to the End-users requirements.

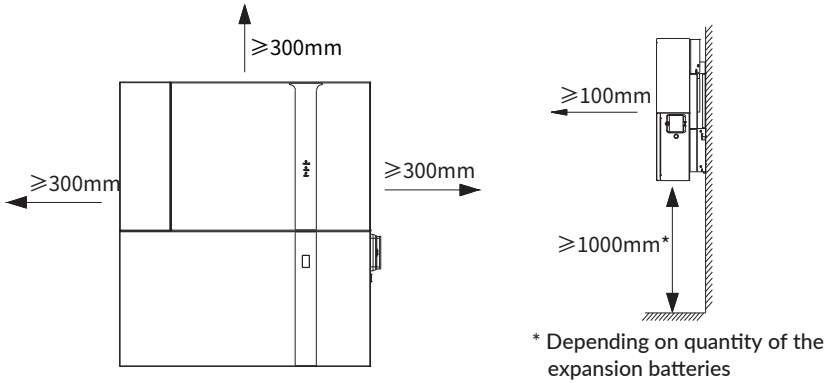

* Depending on quantity of the expansion batteries

***For Australia, according to ASNZ5139-2019-4.2.2.2, the non-combustible material needs to be placed between the wall and the battery unit and must extend 600mm to the left and right of the battery and 900mm above it.**

6.2 Preparing Tools and Instruments

Category	Tools and Instruments		
Installation	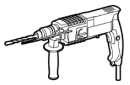 Hammer drill (with a Φ10 mm drill bit)	 Torque socket wrench SW10	 Multimeter (DC voltage measurement range ≥ 1000 V DC)
	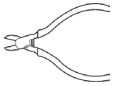 Diagonal pliers	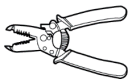 Wire stripper	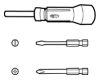 Torque screwdriver (slotted head , torque range: 0-2 N m)
	 Rubber mallet	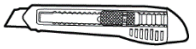 Utility knife	 Cable cutter
	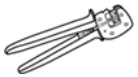 Crimping tool (model: PV-CZM-22100)	 Cord end terminal crimper	 Disassembly and Assembly Tool (model: PV-MS-HZ open-end wrench)
	 Vacuum cleaner	 Heat shrink tubing	 Heat gun
	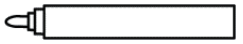 Marker	 Measuring tape	 Bubble or digital level
Personal Protective Equipment	 Safety gloves	 Safety goggles	 Anti-dust respirator
	 Safety shoes	N/A	N/A

6.3 Mounting Inverter and Expansion Battery Pack

WARNING

Risk of injury due to weight of product

Injuries may be caused if the product is lifted incorrectly or dropped while being transported or mounted.

- ★ Transport and lift the product carefully. Take the weight of the product into account.
- ★ Wear suitable personal protective equipment for all work on the product.

CAUTION

Risk of injury due to damaged cables

There may be power cables or other supply lines (e.g., gas or water) routed in the wall.

- ★ Ensure that no lines are laid in the wall which could be damaged when drilling holes.

6.3.1 Mounting the SMILE-B3-PLUS

Dimensions of wall bracket (mm)

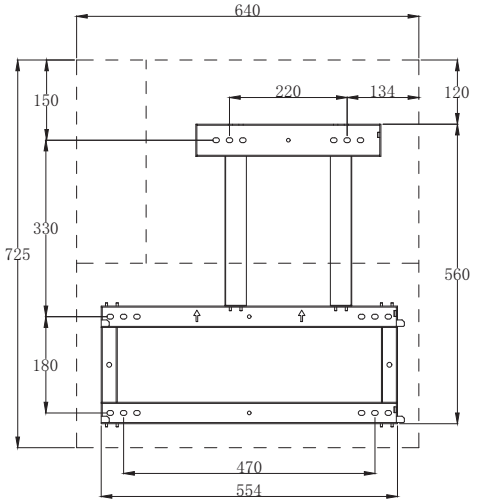

The steps to mount the SMILE-B3-PLUS are listed below:

1. Remove the wall bracket from SMILE-B3-PLUS, place it on the wall where the system will be installed, and use a marker to locate the bracket.

NOTE

Considering the battery expansion, the bottom of the wall bracket should be at least 500 mm above the ground.

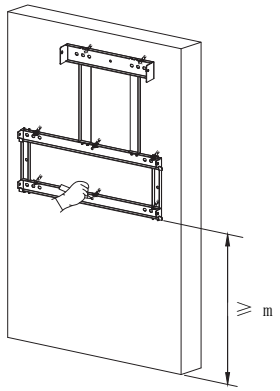

2. Drill 8 holes on the wall with Φ10mm drill and insert 8 screw anchors into the drill holes.

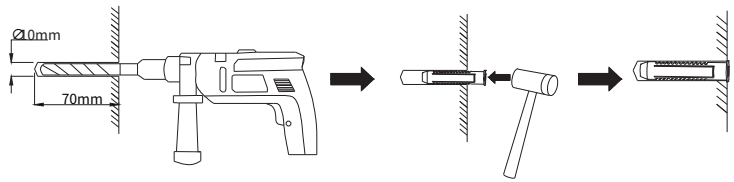

3. Attach the wall bracket to the wall and tighten the screws with the tool of SW10 hexagon sleeve.

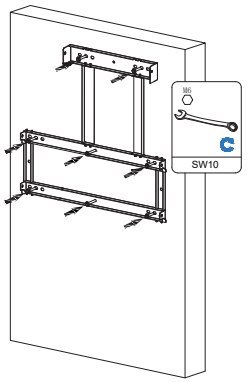

4. Hold the handles on both sides of the inverter and install SMILE-B3-PLUS on the wall bracket. This step should take two people to complete.

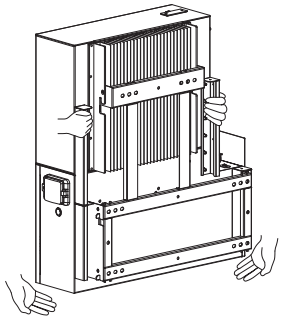

5. Tighten the wall bracket and SMILE-B3-PLUS with screw M6*16 (X6) (tool: T20 screwdriver, torque: 3.0 Nm).

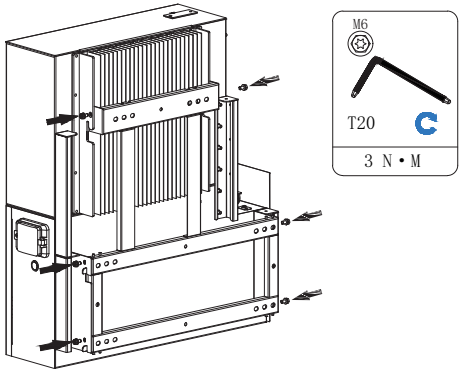

6. Install the holders for cable box cover (tool: T20 screwdriver, torque: 2.5 Nm)

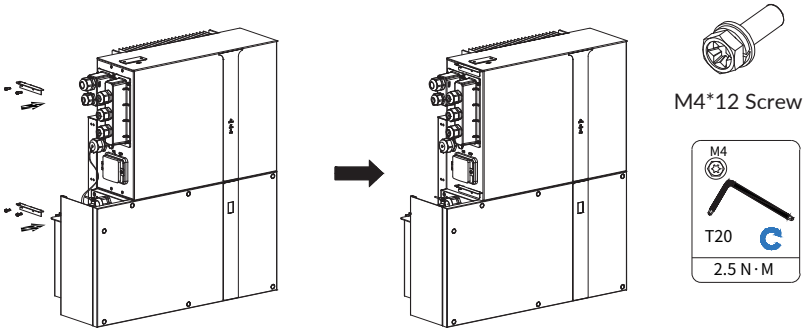

7. Perform electrical connection work (please refer to Section 7 Electrical Connection).

6.3.2 Mounting the Expansion Battery Pack

You can install up to 5 extra batteries in a system.
The steps for expanding the battery is as below. Expansion wiring refer to chapter 7.7.

NOTE

If there are no expansion batteries to install, please ignore Chapter 6.3.2 and skip to 6.3.3.

1. Take out the expansion brackets and the battery wall bracket, then fix them together with four M4 flange nuts (tools: SW7 sleeve or other tools for M4 flange, torque: 1.6 Nm).

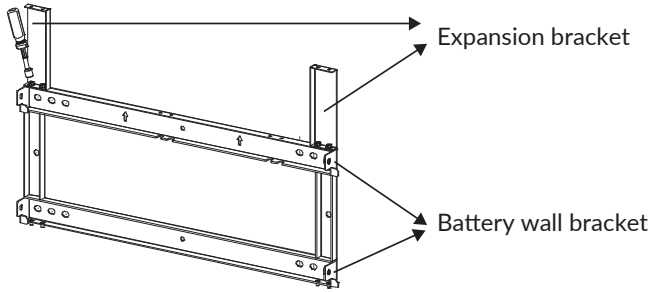

2. Use two M4 flange nuts to fix the wall bracket assembled in the step 1 to the wall bracket of SMILE-B3-PLUS (tools: SW7 sleeve or other tools for M4 flange, torque: 1.6 Nm).

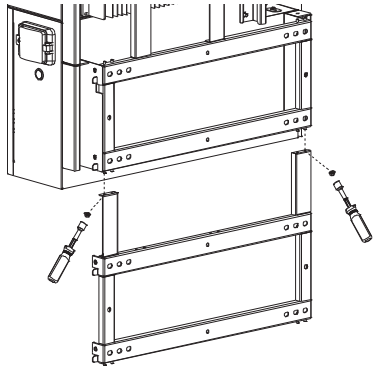

3. Mark the points according to holes on the bracket and remove the assembled wall bracket.

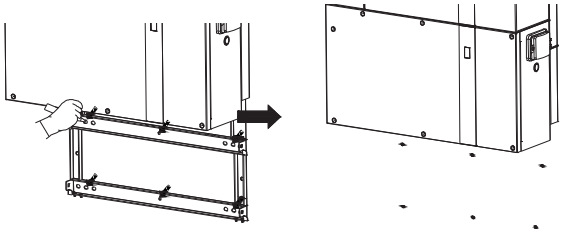

4. Drill 6 holes on the wall with Φ10mm drill and insert 6 screw anchors into the drill holes.

5. Use four M4 flange nuts to fix the wall bracket assembled in the step 1 to the wall bracket of SMILE-B3-PLUS again (tools: SW7 sleeve or other tools for M4 flange, torque: 1.6 Nm).

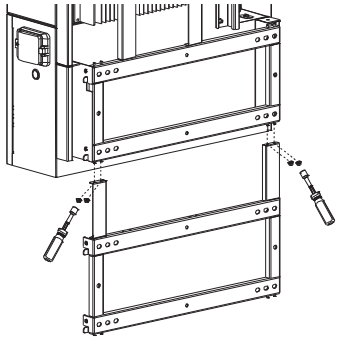

6. Attach the wall bracket for expansion to the wall by tightening the screws with SW10 hexagon sleeve.

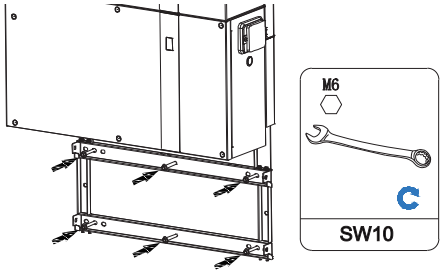

7. Hold the handles on both sides of the battery pack and install the battery pack on the wall bracket. This step should take two people to complete. (Please install the expansion battery by pushing it from the side)

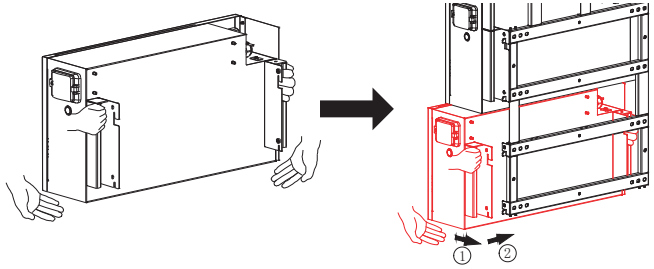

8. Tighten the wall bracket and the battery pack with screw M6*16 (X4) (tool: T20 screwdriver, torque: 3.0 Nm).

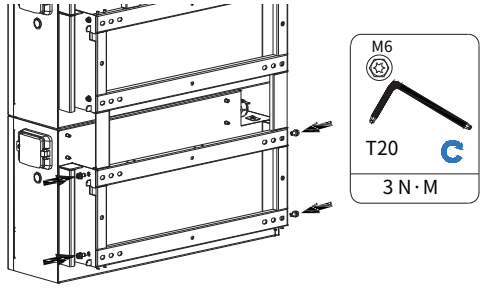

9. Remove the rubber plugs from the battery, and then remove the front cover after unscrewing screws with T20 screwdriver.

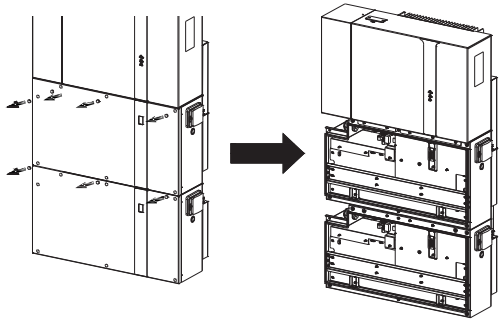

10. Remove the cable box cover by unscrewing the screws at the top of the inverter by hand and perform electrical connection work (please refer to Chapter 7.7).

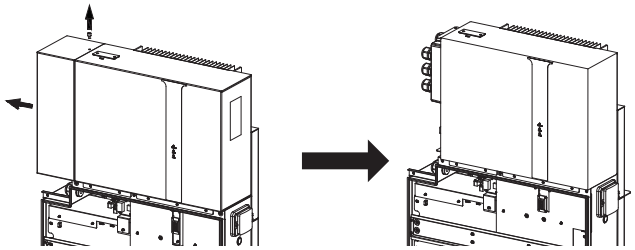

6.3.3 Mounting the WiFi Module

1. Remove the WiFi cover from the top of the inverter with Torx 20 screwdriver.

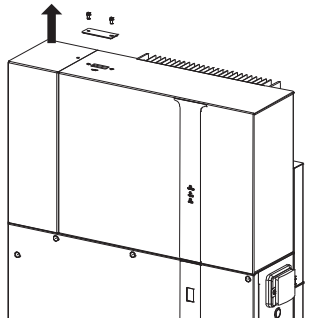

2. Tighten the WiFi module on the top of SMILE-B3-PLUS.

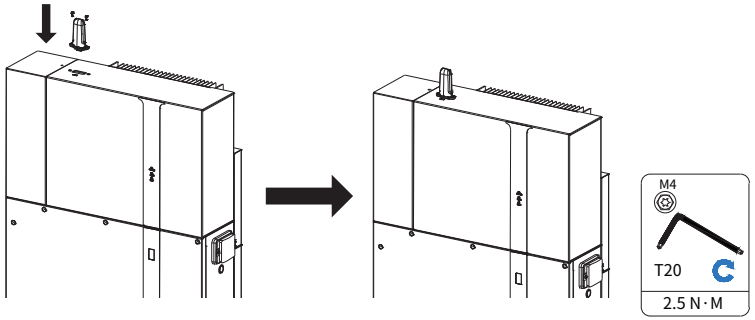

07 Electrical Connection

Precautions

DANGER

Before connecting cables, ensure that all breakers of the SMILE-B3-PLUS and the battery pack and all the switches connected to SMILE-B3-PLUS and the battery pack are set to OFF. Otherwise, the danger voltage of the product may result in electric shocks.

WARNING

- The device damage caused by incorrect cable connections is not covered under any warranty.
- Only certified electricians are allowed to connect cables.
- Operation personnel must wear proper PPE when connecting cables.

NOTICE

The cable colors shown in the electrical connection diagrams provided in this chapter are for reference only.
Select cables in accordance with local cable specifications (green-and-yellow cables are only used for PE).

7.1 Overview of the Connection Area

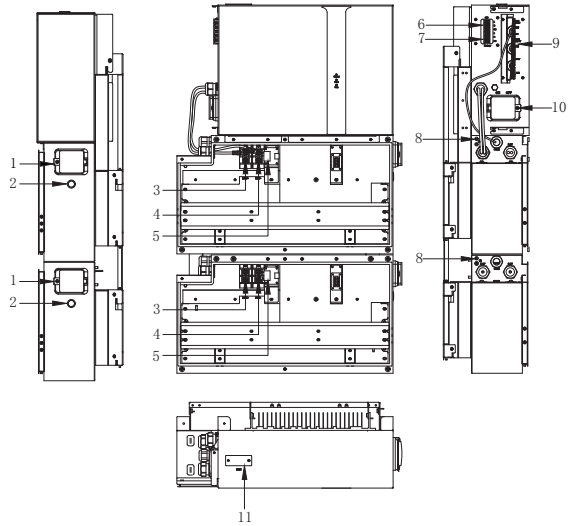

Position	Designation
1	Battery breaker* of battery pack
2	Power button of battery pack
3	BAT+ connection port
4	BAT- connection port
5	BMS Communication connectors
6	Grid connection port
7	Backup connection port;
8	Connection point for an additional grounding
9	Communication port（CAN/RS485,BMS, LAN, Meter/Grid-CT, DRM**, PV-CT, AUX）
10	Battery breaker* of SMILE-B3-PLUS
11	Connection port for the WiFi module

*All breakers of SMILE-B3-PLUS are switched off when shipped.
**The DRM is only for regions with AS/NZW 4777.2 safety regulations.

The following table is about DRM interface definition, only for Australia.

Mode	Requirement
DRM0	Operate the disconnection device
DRM1	Do not consume power
DRM2	Do not consume at more than 50% of rate power
DRM3	Do not consume at more than 75% of rate power AND Source reactive power if capable
DRM4	Increase power consumption (subject to constraints from other active DRMs)
DRM5	Do not generate power
DRM6	Do not generate at more than 50% of rate power
DRM7	Do not generate at more than 75% of rate power AND Sink reactive power if capable
DRM8	Increase power generation (subject to constraints from other active DRMs)

7.2 Preparing Cables

No.	Cable	Type	Conductor Cross Section Area Range	Outer Diameter	Source
1	Battery power cable	Standard PV cable in the industry (recommended type: PV1-F)	16 mm^2	N/A	Delivered with the battery pack
2	Battery communication cable	Standard network cable in the industry (recommended type: Cat5e, UTP, UV-resistant for outdoor use)	0.12 ～ 0.2 mm^2 (AWG26~AWG24)	N/A	Delivered with the battery pack
3	CT communication cable	Standard network cable in the industry (recommended type: Cat5e, FTP, UV-resistant for outdoor use)	0.12 ～ 0.2 mm^2 (AWG26~AWG24)	N/A	Delivered with the inverter
4※1	Signal cable	Standard network cable in the industry (recommended type: Cat5e, FTP, UV-resistant for outdoor use)	0.12 ～ 0.2 mm^2 (AWG26~AWG24)	4 ~ 6 mm	Purchased by the installer
5※2	Signal cable	Multiple-core outdoor shielded twisted pair cable	0.1 ～ 1.3 mm^2	4~6 mm	Purchased by the installer
6	Grid power cable	Three-core (L, N and PE) outdoor copper cable	4 ～ 6 mm^2	13-18 mm	Purchased by the installer
7	Backup power cable	Three-core (L, N and PE) outdoor copper cable	2.5 ～ 6 mm^2	6-12 mm	Purchased by the installer
8	PE cable	Single-core outdoor copper cable	2.5 ～ 10 mm^2	N/A	Purchased by the installer

※1 For CAN/RS485, LAN, Meter, DRM communication connection with inverter.
※2 For AUX communication connection with inverter

7.3 Connecting Additional Grounding for Secondary Battery Only

An external grounding connection is provided at the left side of the SMILE-B3-PLUS. Prepare M5 OT terminals, strip the grounding cable insulation, insert the stripped part of the grounding cable into the ring terminal lug and crimp using a crimping tool.

Connect the OT terminal with ground point using the torque is 2.5 Nm with T20 screwdriver.

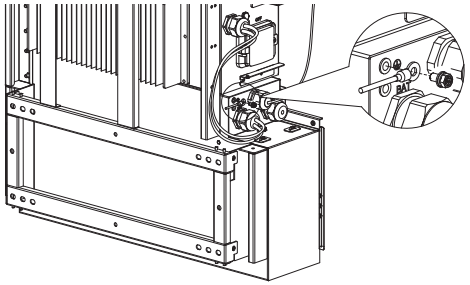



Connect the expanded battery to the ground point of SMILE-B3-PLUS with the grounding cable.

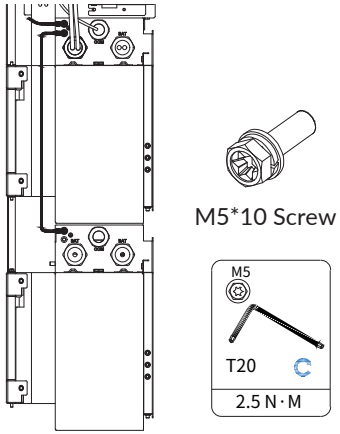

7.4 AC Connection

7.4.1 Conditions for the AC Connection

AC breakers must be installed on the AC side of the SMILE-B3-PLUS to ensure that the system can be safely disconnected from the power grid and the load.

DANGER

Danger to life due to fire!
You must protect each SMILE-B3-PLUS with an individual AC circuit breaker in or-der to ensure that the system can be disconnected safely.

Do not connect loads between the SMILE-B3-PLUS and the grid breaker.
For load switching, please use dedicated circuit breakers with load switch function. The selection of the AC circuit breaker rating depends on the wiring design (wire cross section area), cable type, wiring method, ambient temperature, inverter current rating, etc.
Derating of the AC circuit breaker rating may be necessary due to self-heating or if exposed to heat.
The maximum AC current of SMILE-B3-PLUS can be found in the following table.
We recommend the following AC circuit breaker for AC connection.

Description	Max Current	Recommend AC Circuit Breaker Rating
Grid side	26A	40A
Backup side	13A	25A

7.4.2 Grid and Backup Connection

There are two AC terminal blocks for grid and backup connection which have the same installation steps.
Following cable requirements for AC connection are recommended.

Description	Value
Cable diameter	9-16 mm
Copper conductor cross section area range	4~6 mm^2
Stripping length of the insulated conductors	10~12 mm

1. Take out the cord end terminals and remove AC connection cover from SMILE-B3-PLUS.
2. Lead the AC cable through the cable gland of the AC connection cover, don’ t tighten the pressure cap of the cable gland.

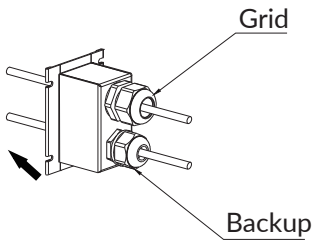

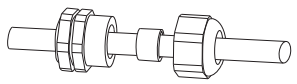

Installation method of AC cable via cable gland

3. Dismantle the AC cable by 80mm, and strip the insulation of L, N and PE conductors by 10mm.

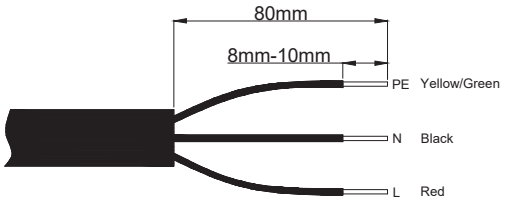

4. Insert the stripped part of the conductors into the cord end terminals and crimp them by using a crimping tool.

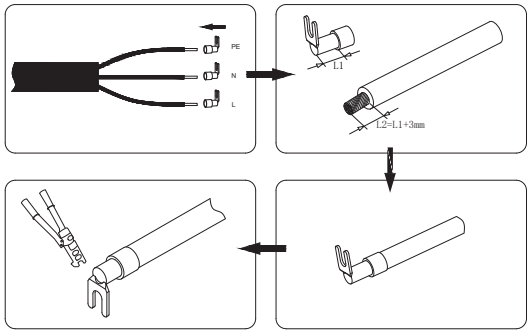

5. Fix the terminals with different color conductors on the corresponding electrode holders, and use a #2 Phillips screwdriver to tighten them one by one with a torque of 2 Nm.

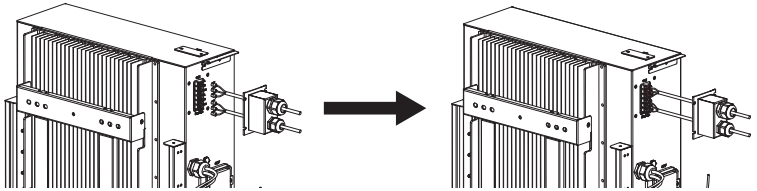

6. Place the AC connection cover against the inverter and tighten it.

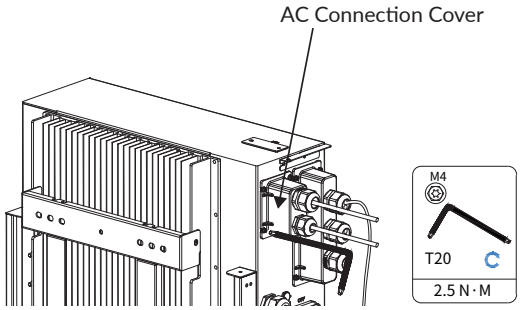

NOTICE

For Australia and New Zealand installation site, the neutral cable of grid side and backup side must be connected together, otherwise backup output function will not work.

Residual Current Protection

The inverter is equipped with an all-pole sensitive residual current monitoring unit (RCMU) with an integrated differential current sensor which fulfills the requirement of DIN VDE0100-712(IEC60364-7-712:2002).
Therefore, an external residual current device (RCD) is not required. If an external RCD needs to be installed because of local regulations, a RCD type A or type B can be installed as an additional safety measure.
The all-pole sensitive residual current monitoring unit (RCMU) detects alternating and direct differential currents. The integrated differential current sensor detects the current difference between the neutral conductor and the line conductor. If the current difference increases suddenly, the inverter will disconnect from the grid. The function of the all-pole sensitive residual current monitoring unit (RCMU) has been tested according to IEC62109-2.

Notice of installing an external residual current device (RCD) for installa-tion of Australia and New Zealand

Where an external residual current device (RCD)is required in a TT or TN-S sys-tem, install a residual current device which trips at a residual current of 30 mA.

7.5 Meter & CT Connection

7.5.1 CT Connection

The CT cables have been installed with SMILE-B3-PLUS when shipped.
Please take out 2 CTs (Grid CT and PV CT) provided as accessory.

Step 1: Buckle the Grid CT on the house-service live wire. The arrow of the Grid CT should point to the Grid port of SMILE-B3-PLUS.

Step 2: Buckle the PV CT on the grid live wire. The arrow of the PV CT should point to the Grid port of PV inverter.

Step 3: Connect the CT cables to the Grid CT and PV CT respectively.

NOTE

The CT cable marked Grid CT should be connected to the Grid CT, and the CT cable marked PV CT should be connected to the PV CT.

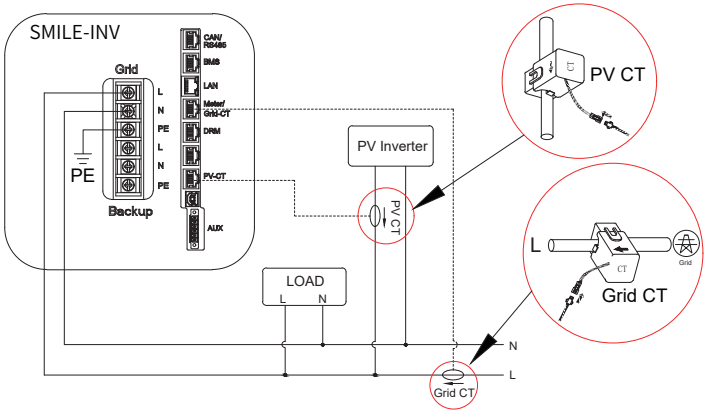

Meter Setting

Model	Grid Meter Address	PV Meter Address
DTSU666-3*230V 5A (with-out CT)	1	2
DTSU666-100/40mA (with CT)	1	N/A

1. DTSU666-3*230V 5A: Three-phase meter (without CT)

When the meter is used as Grid meter, please follow the steps below to complete the address setting.

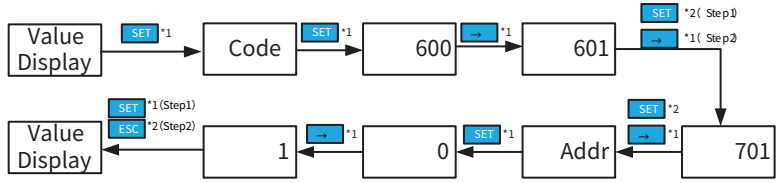

When the meter is used as PV meter, please follow the steps below to complete the address setting.

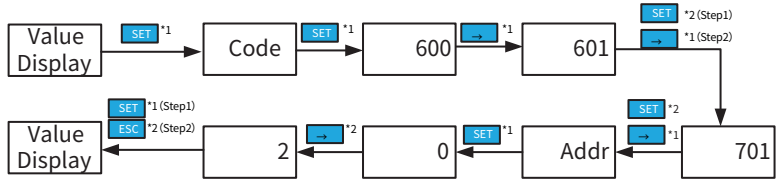

2. DTSU666-100/40mA: Three-phase meter (with CT)

When the meter is used as Grid meter, please follow the steps below to complete the address setting.

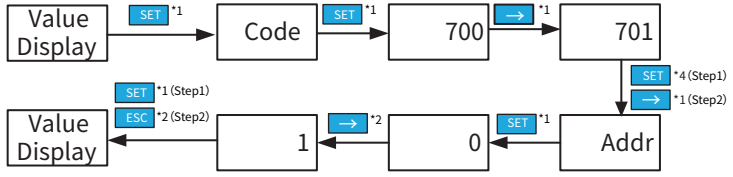

Meter Setting on AlphaCloud

Step 1

When the system work mode is selected as DC, click the button under the “Grid Me-ter” to turn the “Meter” icon orange.
When the system work mode is selected as AC or Hybrid, click the buttons under the “Grid Meter” and “PV side meter” to turn the “Meter” icon orange.

Step 2

Click "Save" and wait a few minutes to refresh the page.
When the “Meter Model” displays DTSU666 model, the setting is successful.

NOTE

It is forbidden to tick CT to modify the CT ratio.

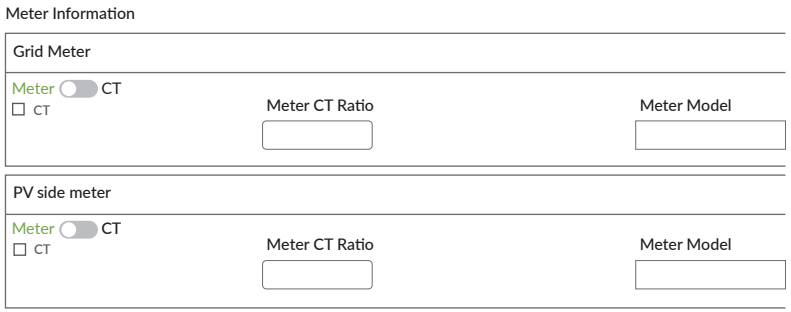

Meter Setting on AlphaAPP

Step 1

When the system work mode is selected as DC, only tick "Meter" icon on the right of the “Grid Meter”.
When the system work mode is selected as AC or Hybrid, both tick "Meter" icon on the right of the “Grid Meter” and “PV side meter”.

Step 2

Click "Submit" and enter the “System information” page to check the meter model. When the “Meter Model” displays DTSU666 model, the setting is successful.

NOTE

It is forbidden to tick CT to modify the CT ratio.



7.5.2 Meter Connection (Optional)

The system supports the following two different metering schemes in order to record the feed-in energy and consumption from grid:

- DTSU666-3*230V 5A: Three/single-phase meter (without CT)
- DTSU666-100/40mA: Three/single-phase meter (with 3 or 6 CTs)

Meter wiring introduction

Loosen the waterproof connectors on the COM connection cover, and then remove the screws on the COM connection cover.

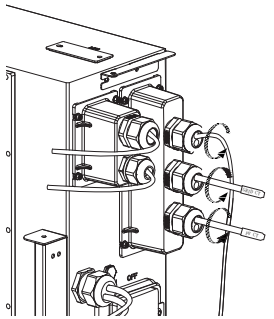

1. DTSU666-3*230V 5A: Three/single -phase meter (without CT) connection

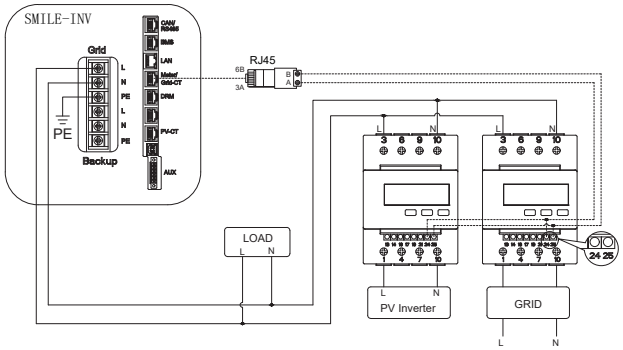

Wiring at single-phase home

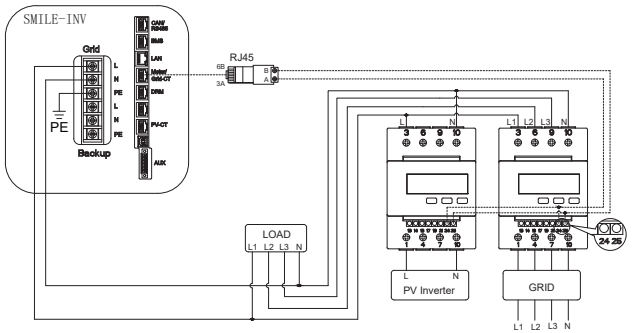

Wiring at three-phase home

2. DTSU666-100/40mA: Three/single-phase meter (with CT) connection

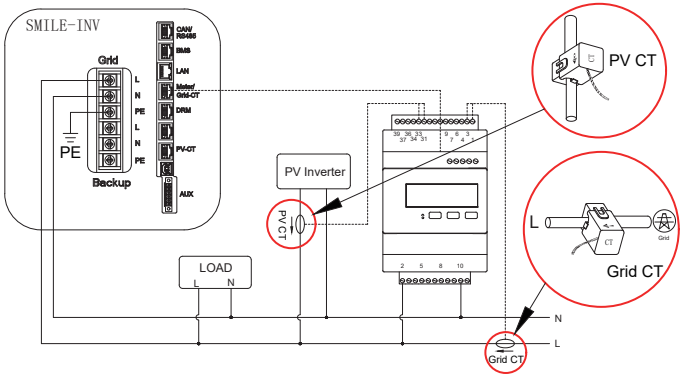

Wiring at single-phase home

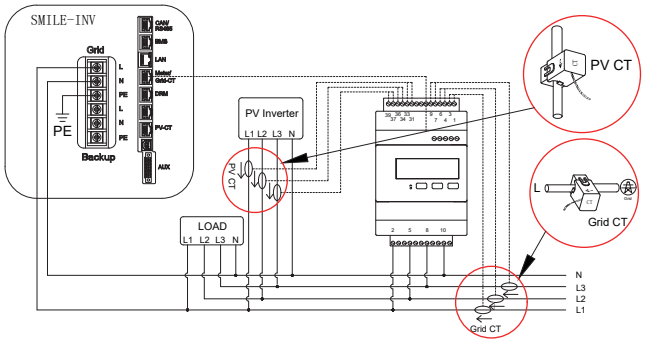

Wiring at three-phase home

Grid CT	PV CT	GRID
1--------IA (White)	31--------IA (White)	2--------L1
3--------IA (Blue)	33--------IA (Blue)	5--------L2
4--------IB (White)	34--------IB (White)	8--------L3
6--------IB (Blue)	36--------IB (Blue)	10-------N
7--------IC (White)	37--------IC (White)	
9--------IC (Blue)	39--------IC (Blue)	

CT Group	Grid-> Load								PV->Load					
CT Phase	IA*	IA	IB*	IB	IC*	IC			IA*	IA	IB*	IB	IC*	IC
Terminal	1	3	4	6	7	9	X	X	31	33	34	36	37	39
Colour	White	Blue	White	Blue	White	Blue			White	Blue	White	Blue	White	Blue

7.6 Communication Connection

For other communication (AUX, DRM, Meter, CAN/RS485) connection, please follow the below steps.
Loosen the waterproof connectors on the COM connection cover, and then remove the screws on the COM connection cover.

Communication connection port as follows:

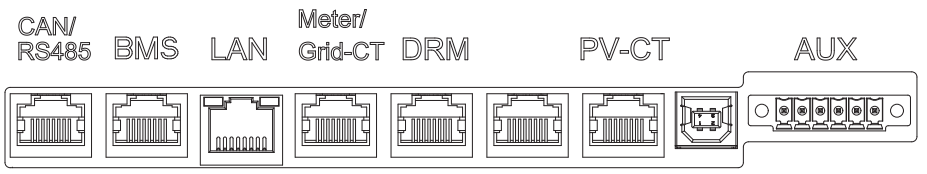

1. Lead the communication cables through the cable glands of the COM connection cover, don't tighten the pressure caps of the cable glands.
   Insert the RJ45 plugs to the relative RJ45 sockets.

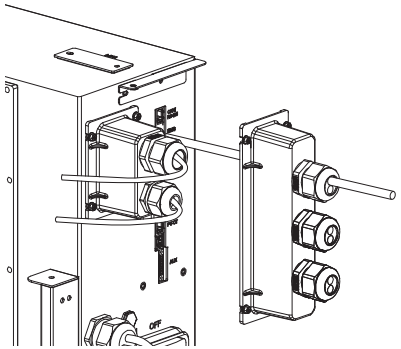

Installation method of two communication cables via M25 cable gland

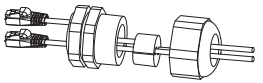

Installation method of only one communication cable via M25 cable gland

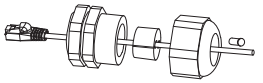

1) For meter wiring, please refer to Chapter 7.4.4 Meter Connection.
2) If DRM support is specified, the system may only be used in conjunction with a Demand Response Enabling Device (DRED). This ensures that the system im-plements the commands from the grid operator for active power limitation at all times. The system and the Demand Response Enabling Device (DRED) must be connected in the same network. Only DRM0 is available for SMILE-B3-PLUS.
3) Take out 6 pin terminal block for AUX connection. Tighten them one by one us-ing the torque of 0.2 Nm with tool of #0 slotted screwdriver.
For AUX position definition, please see the AUX wiring documentation.

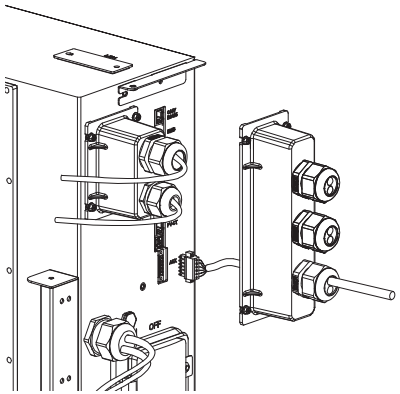

2. Place the COM connection cover against the inverter housing and tighten them.

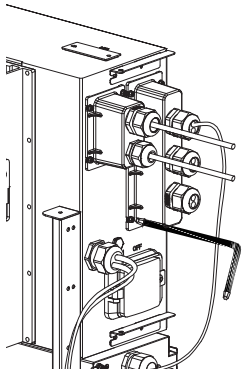

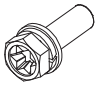

M4*12 Screw

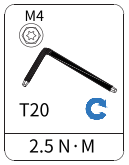

7.7 Electrical Connection of Expansion Battery Packs

1. Remove the terminal resistance from the battery and insert it into the BMS communication port of the last battery (the battery furthest from the inverter).

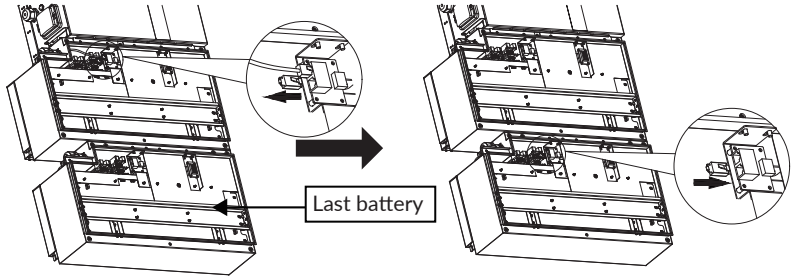

2. Connect the positive power cable from battery 2 to battery 1 (tool: T20 screwdriver, torque: 3 Nm).

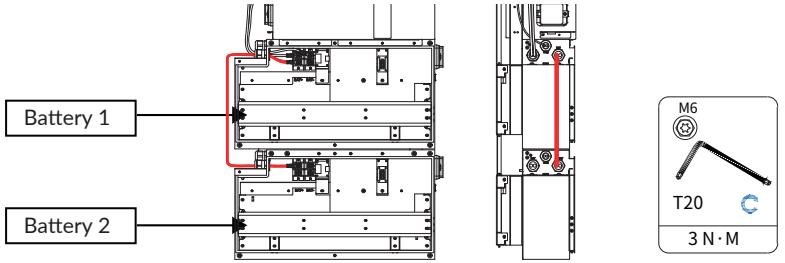

3. Connect the negative power cable from battery 2 to battery 1 (tool: T20 screwdriver, torque: 3 Nm).

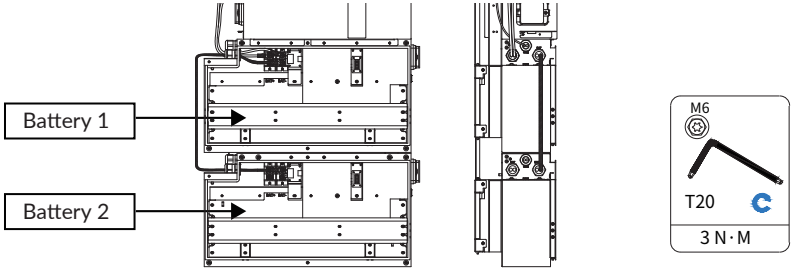

4. Connect the BMS communication cables from battery 2 to battery 1.

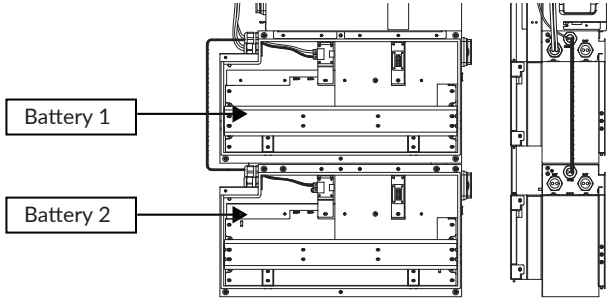

5. Assemble front cover and side cover of the expanded battery with 3 M4 flange nuts (tools: SW7 sleeve or other tools for M4 flange, torque: 1.6 Nm).

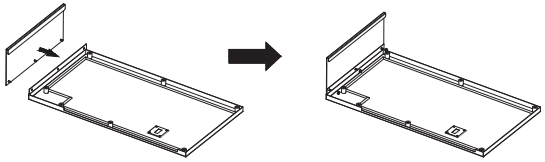

6. Attach the cover to the battery pack.
Fasten the cover on the battery with screws in sequence 1-7 and screw M5*12 (X4) (tool: T20 screwdriver, torque: 2.5 Nm).

NOTE

Seven screws should be pre-locked and then fastened together at the end.

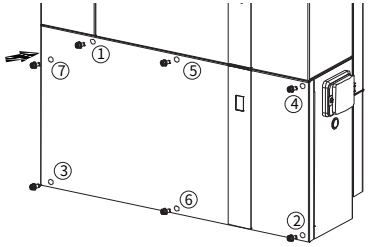

7. Insert the rubber plugs of the battery.

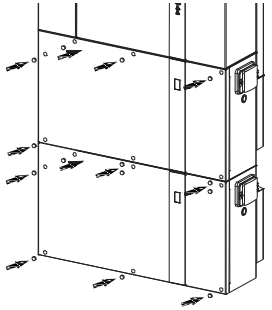

7.8 Mounting the Cable Box Cover

Take out the cable box cover which is provided as accessory.

1. Insert the wire shield in the order shown by the arrow as shown in Figure 1 until the wire shield is installed in place as shown in Figure 2.

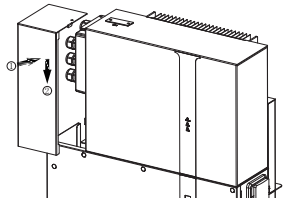

Figure 1

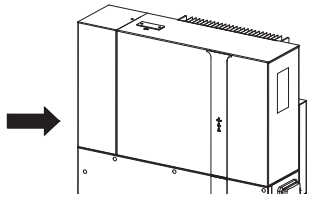

Figure 2

2. Fix the cable box cover by tightening the screws by hand.

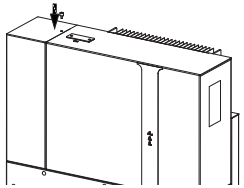

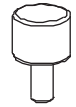

Screw M4

08 WiFi Setting

8.1 Download and Install APP

1. Android device users can download the application through major Android application markets such as Google Play.
2. IOS device users can search for “AlphaESS” in Appstore and download the application.

AlphaESS-APP

8.2 Overview of Functions for Installer Account

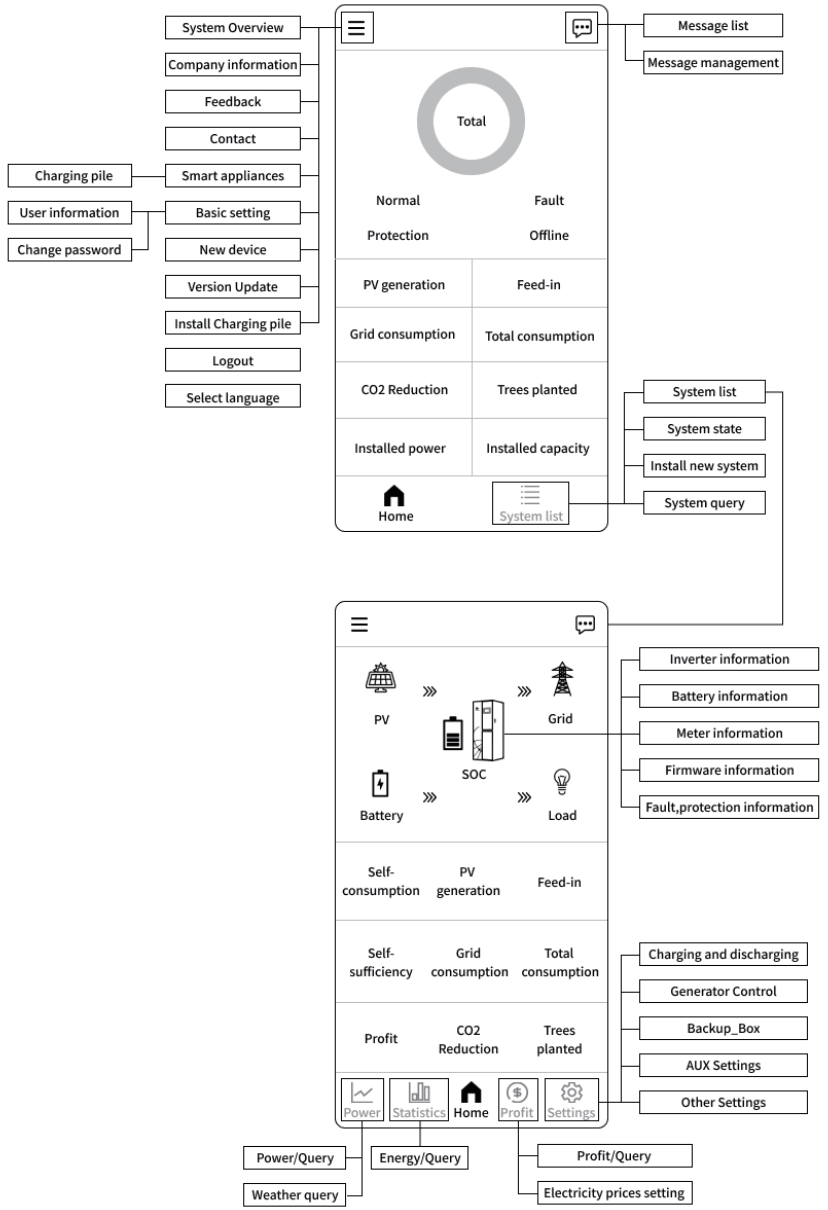

8.3 WiFi Module Setting

This section is for users who have a system with a WiFi module.
AlphaESS App is able to complete network configuration, change setting of the system basic parameter, and monitor system operation and configuration information.

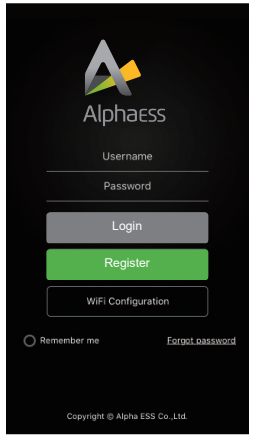

Step 1: Open AlphaESS APP, click the “Wi-Fi Configuration” button and enter the WiFi configuration interface.

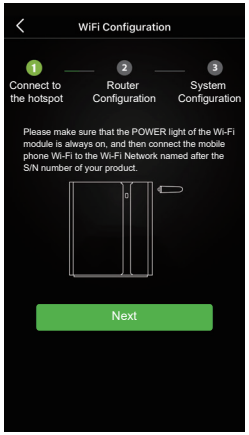

Step 2: After that, please check whether your mobile phone has connected to the system’s hotspot.

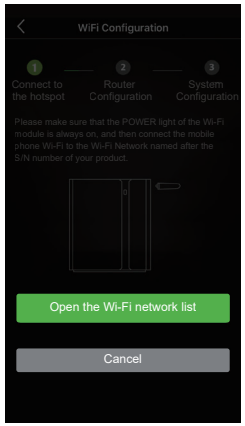

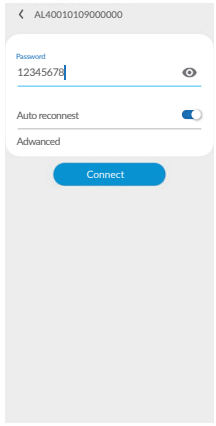



Step 3: If your mobile phone hasn’t connected to the system’s hotspot, please open the Wi-Fi network list and find the hotspot named by the product SN, then enter the password “12345678” and connect to it. After successfully setting it, please go back to the APP and click “Next”.

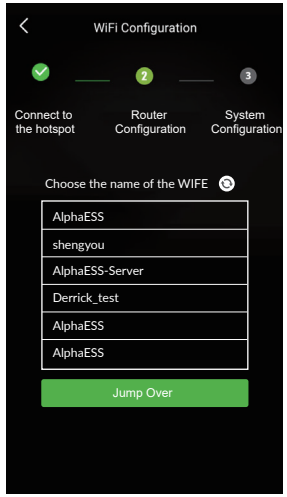

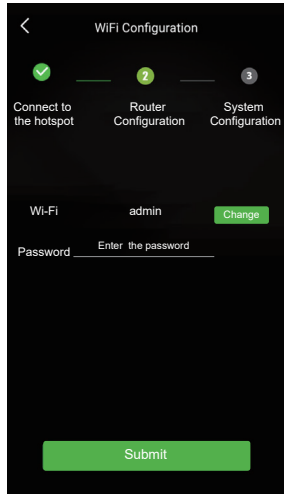

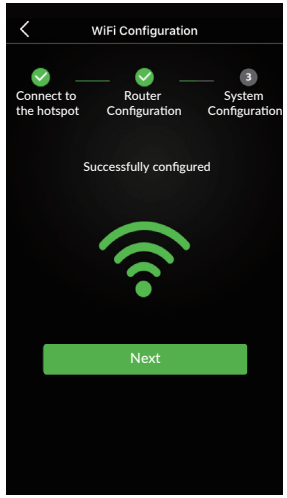

Step 4 Select the WiFi of your home, enter the password, complete the WiFi configuration and submit. If there is no network currently, you can click Jump over to skip the WiFi configuration step and directly set the system parameters.

NOTE

The system will not be able to connect to the Internet without WiFi configuration.

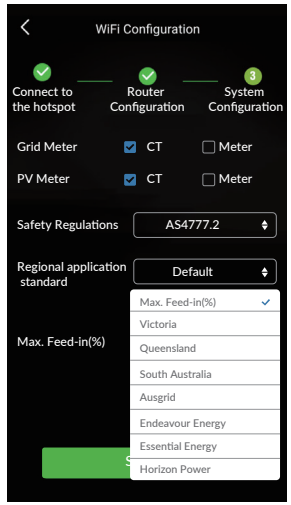

Step 5 Set basic parameters, including PV capacity on the grid side, the type of meters, safe-ty regulations and regional application standard. Click “Submit” when the settings are complete.

Please set the safety standard appropriate for your country or purpose via APP or Web during pilot run;

! The safety standard must be set correctly

If you select a safety standard which is not valid for your country and purpose, it can cause a disturbance in the energy storage system and lead to problems with the grid operator. When selecting the safety standard, you must always observe the locally applicable standards and directives as well as the properties of the PV system (e.g. PV system size, grid-connection point).

- If you are not sure which safety standard is valid for your country or purpose, con-tact your grid operator for information on which safety standard is to be configured.

NOTE

When the safety regulation is set as AS4777.2, the secondary sub-options can be selected according to the region or local grid company (Please refer to Appendix 2).

09 Commissioning

9.1 Checking Before Power-On

No.	Check Item	Acceptance Criteria
1	Mounting environment	The mounting space is proper, and the mounting environment is clean and tidy, without foreign object.
2	Battery pack and inverter mounting	SMILE-B3-PLUS and expansion battery packs are mounted correctly, securely, and reliably.
3	WiFi mounting	The WiFi module is mounted correctly, securely, and reliably
4	Cable layout	Cables are routed properly as required by the customer.
5	Cable tie	Cable ties are secured evenly and no burr exists.
6	Grounding	The ground cable is connected correctly, securely, and reliably.
7	Switches and breakers status	The battery switches and all the breakers connecting to the product are OFF.
8	Cable connections	The AC cable, battery cable, and communication cables are connected correctly, securely, and reliably.
9	Unused power terminals	Unused cable glands are blocked by rubber sealings which are secured by pressure caps.

9.2 Check the Running State

Prerequisites

Before switching on the AC breaker between the inverter and the grid, check that the AC voltage on the power grid side of the AC breaker is within the specified range.
Please select the acceptance of installation on site when the light intensity is strong.

Procedure

1. Ensure that the battery switches and all breakers connecting to the product are OFF.
2. Check the grid-connected state of the product and the installation of two CTs.
   Short press the power button on the right side of battery pack, then switch on the battery breaker .
   Switch on the breaker located at the middle left of SMILE-B3-PLUS.
   Switch on the external AC breaker between the grid and SMILE-B3-PLUS.
   Switch on PV and PV Inverter.
   Set the operating parameters through the APP.
   Wait about 3 minutes for the SMILE-B3-PLUS and the PV Inverter to enter the grid-connected status, and observe the LED states on the front panel. At this time, the 2 LEDs ("Normal", "COM") and battery indictors on the front panel will show green always.
   Check the running status through the APP.
   When PV power is not more than 3kW, PV supplies power to the battery and load. If the grid power is not more than 100W in this scenario, then the installation is normal.

3. Check the UPS status of the product
   Switch off the external AC breaker between the grid and the SMILE-B3-PLUS.
   The SMILE-B3-PLUS will enter the UPS status at once, and observe the LED states on the front panel. At this time, the following 2 LEDs ("Normal", "COM") and battery indictors on the front panel will show green always.

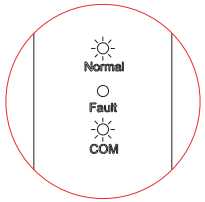

NOTICE

During the running test , if the “Fault” LED indictor of the inverter or LED indictors of the battery pack show red, please refer to Section 10.2 for troubleshooting.

9.3 Powering Off the Product

WARNING

After the product is powered off, the remaining electricity and heat may still cause electric shocks and body burns. Therefore, put on protective gloves and operate the product 5 minutes after the power-off.

Procedure

1. Long press the power button of battery pack for 6 seconds, then switch off the battery breaker of battery pack.
2. Switch off the battery breaker located at the middle left of the inverter.
3. Switch off the AC breaker between the SMILE-B3-PLUS and the load.
4. Switch off the AC breaker between the SMILE-B3-PLUS and the grid.

10 Maintenance and Troubleshooting

10.1 Routine Maintenance

Normally, SMILE-B3-PLUS need no maintenance or calibration.
Disconnect SMILE-B3-PLUS from all power sources before cleaning. Clean the housing, cover and display with a soft cloth.

To ensure that the SMILE-B3-PLUS can operate properly in the long term, you are advised to perform routine maintenance on it as described in this chapter.

Maintenance checklist

Check Item	Acceptance Criteria	Maintenance Interval
Product cleanliness	The heatsink at the back of SMILE-B3-PLUS are free from obstacles or dust.	Once every 6 to 12 months
Product visible damage	The SMILE-B3-PLUS are not damaged or deformed.	Once every 6 months
Product running status	1. SMILE-B3-PLUS operate with no abnormal sound. 2. All parameters of SMILE-B3-PLUS are correctly set. Perform this check when SMILE-B3-PLUS is running.	Once every 6 months
Electrical connections	1. Cables are securely connected. 2. Cables are intact, and in particular, the cable jackets touching the metallic surface are not scratched. 3. Unused cable glands are blocked by rubber sealing which are secured by pressure caps.	Perform the first maintenance 6 months after the initial commissioning. From then on, perform the maintenance once every 6 to 12 months.

⚠ CAUTION

Risk of burns due to hot heatsink and housing of the inverter
The heatsink and housing can get hot during operation.

- ★ During operation, do not touch any parts other than the cover.
- ★ Wait approx. 30 minutes before cleaning until the heatsink has cooled down.

10.2 Troubleshooting

10.2.1 Inverter Error Troubleshooting

Inverter LED Signals

LED Indictor	Status	Description
Normal		On: system is in working mode normally
		Flicker: system is in standby mode or self-checking process
		Off: system is in fault mode or off
Fault		Off: system is in working mode normally or off
		On: system is in fault mode
COM		On: network connection is normal
		Flicker: connecting to the server
		Off: system is not connected network

	Description	Solution
Warning	Grid AC over voltage	1. If these warnings occur occasionally, it is a short-time fault of the grid. The inverter will resume work after the grid is normal. No action is required. 2. If these warnings occur frequently but can be automatically cleared, contact the local power operator for permission and modify the grid protection parameters of the inverter. 3. If the recovery fails for a long time, please confirm: 1) Whether the AC circuit breaker is switched off. 2) Whether the AC terminal is in good contact 3) Whether the grid is disconnected.
	Grid AC under voltage	
	Grid AC absent	
	Grid AC over frequency	
	Grid AC under frequency	
	Grid abnormal	
	Inverter over tempera-ture	1. If the warning occurs occasionally and the inverter can resume work automatically. No action is required. 2. If this warning occurs frequently or continuously, check whether the installation site is exposed to direct sunlight, with good ventilation and high ambient temperature. If there is no direct sunlight and there is good ventilation and heat dis-sipation, please contact AlphaESS after-sales team.
	Ground disconnection alarm	Please check whether the grounding cable is connected properly.

	Description	Solution
Warning	Zero firewire reverse alarm	Please check whether the live line and neutral line are inversely connected.
	NTC fail	Please check whether the cable connection to the NTC terminal is loose.
	Battery voltage very high	If the warning occurs at the first installation, please check whether the battery voltage is within the allowable range. If this warning occurs during operation, check whether the battery cable is loose and whether the BMS communication is abnormal.
	Eps capacitance decrease	If the warning occurs occasionally, please restart the system. If the warning still occurs after restart, please contact AlphaESS after-sales team.
Fault	Leakage current abnormal	1.If this warning occurs occasionally, it may be caused by the occasional exception of the external line. When the exception disappears, the system will return to normal. No action is required. 2. If this warning occurs continuously, please contact AlphaESS after-sales team.
	Control power low	1. If this warning occurs occasionally, the inverter will resume work automatically. No action is required 2. If this warning occurs continuously, please contact AlphaESS after-sales team.
	Output DC over current	1. If the warning occurs occasionally, it is a short-time fault of the grid. The inverter will resume work after the grid is normal. No action is required. 2. If this warning occurs continuously, please contact AlphaESS after-sales team.
	Inverter relay abnormal	1. If the warning occurs occasionally, it is a short-time fault of the grid. The inverter will resume work after the grid is normal. No action is required 2. If this warning occurs continuously, please contact AlphaESS after-sales team.
	Leakage current HCT abnormal	1.If this warning occurs occasionally, it may be caused by the occasional exception of the external line. When the exception disappears, the system will return to normal. No action is required. 2. If this warning occurs frequently or cannot be cleared for a long time, please use a multimeter to measure the resistance between the Grid port, L, N and the ground. If the resistance are less than 100 KΩ, please check whether cables are damaged, connected, or flooded.
	Bus over voltage	1. If this warning occurs occasionally, please restart the inverter. 2. If this warning occurs frequently or cannot be cleared for a long time, please contact AlphaESS after-sales team.
	Internal communica-tion error	Please contact AlphaESS after-sales team.
	EEPROM error	Please contact AlphaESS after-sales team.

	Description	Solution
Fault	Consistent warning	1. If the warning occurs occasionally, please restart the inverter. 2. If this warning occurs frequently or cannot be cleared for a long time, please contact AlphaESS after-sales team.
	Inverter abnormal	1. If this warning occurs occasionally, please restart the inverter. 2. If this warning occurs frequently or cannot be cleared for a long time, please contact AlphaESS after-sales team.
	Boost abnormal	1. If this warning occurs occasionally, please restart the inverter. 2. If this warning occurs frequently or cannot be cleared for a long time, please contact AlphaESS after-sales team.
	Battery absent	1. Check whether battery cables are connected properly; 2. Check whether the DC Switch is on; 3. Check whether the BMS communication is normal.
	EMS communication error	Check whether the connection terminal between the EMS board and the inverter control board is loose.
	UPS overload	Please reduce the loads on the Backup port and restart the inverter, or wait for the warning to be cleared after 5 minutes .
	EPS output short	Disconnect the loads on the Backup port and restart the inverter. If the problem is not been solved, please contact AlphaESS after-sales team.
	Inv HW over current	1. If the warning occurs occasionally, please restart the inverter. 2. If this warning occurs frequently or cannot be cleared for a long time, please contact AlphaESS after-sales team.
	Bus under voltage	1. If this warning occurs occasionally， please restart the inverter. 2. If this warning occurs frequently or cannot be cleared for a long time, please contact AlphaESS after-sales team.
	Battery Over Total Voltage	If the warning occurs occasionally, check whether it is cleared after three minutes ; If the warning occurs frequently, please contact AlphaESS after-sales team.
	Battery Under Total Voltage	
	Inv over current	1. If this warning occurs occasionally, please restart the inverter. 2. If this warning occurs frequently or cannot be cleared for a long time, please contact AlphaESS after-sales team.
	DC HW over current	1. If this warning occurs occasionally, please restart the inverter; 2. If this warning occurs frequently or cannot be cleared for a long time, please contact AlphaESS after-sales team.
	Battery Discharge over current	Please reduce the loads on the Backup port and restart the inverter, or wait for the warning to be cleared after 5 minutes .

10.2.2 Battery Protection Description

LED Ring	Protection Code	LED Display	Description	Troubleshooting
Green LEDs flash once every 3s.	1		Temperature difference	Wait for automated recovery. In case the problem is not recovery for a long time, call for service.
	3		High temperature	Stop discharging and charging until this code is eliminated and wait for the temperature to drop.
	4		Low-tempera-ture discharge	Stop discharging until this code is eliminated and wait for the temperature to rise.
	5		Overcurrent charge	Wait for automated recovery. In case the problem is not recovery for a long time, call for service.
	6		Overcurrent discharge	
	8		Cell overvoltage	
	9		Cell under voltage	Stop discharging and call service immediately.
	11		Low-temperature charge	Stop discharging until this code is eliminated and wait for the temperature to rise.

NOTE

In work mode, if the No. 9 protection code appears, please push the power button of the battery 5 times within 10 seconds. The BMS will then be forced to turn on the MOSFET of discharge so that the inverter will detect the battery open voltage and charge the battery.

10.2.3 Battery Error Description

LED Indictor	Error Code	LED Display	Description	Troubleshooting
Red LEDs flash once every 3s.	Error 01		Temperature sensor failure	Please restart the battery. If the problem is not resolved, please call for service.
	Error 05		MOSFET error	
	Error 06		Circuit breaker open	Switch on circuit breaker after powering off the battery.
	Error 08		LMU disconnect (slave)	Reconnect the BMS communication cable.
	Error 09		SN missing	Call for service.
	Error 10		LMU disconnect (master)	Reconnect the BMS communication cable.
	Error 11		Software ver-sion inconsistent	Call for service.
	Error 12		Multi master	After shutting down the battery system, please restart all batteries within 30s.
	Error 13		MOS over temperature	Please power off the battery and turn on the battery after about 2 hours.

11 Uninstallation & Return

11.1 Removing the Product

Procedure

Step 1: Power off the product by following instructions in Chapter 9.3 Powering Off the Product.
Step 2: Disconnect all cables from the product, including communication cables, battery power cables, AC cables, and PE cables.
Step 3: Remove the WiFi module.
Step 4: Remove SMILE-B3-PLUS from the wall bracket.
Step 5: Remove the mounting bracket.

11.2 Packing the Product

If the original packaging is available, put SMILE-B3-PLUS inside it and then seal it using adhesive tape.
If the original packaging is not available, put SMILE-B3-PLUS inside a suitable cardboard box and seal it properly.

11.3 Disposing of the Product

If SMILE-B3-PLUS service life expires, dispose of it according to the local disposal
rules for electrical equipment and electronic component waste.
Dispose of the packaging and replaced parts according to the rules at
the installation site where the device is installed.
Do not dispose SMILE-B3-PLUS with normal domestic waste.



Li-Ion



12 Specification

12.1 Technical Data of SMILE-B3-PLUS

Model	SMILE-B3-PLUS
Battery (Inverter side)	
Battery Type	Li-ion
Battery Voltage Range	40 ~ 58 V
Maximum Charge/ Discharge Power	3 kW
Maximum Charge/ Discharge Current	60 A / 60 A
Communication	CAN
Output AC (Back-up side)	
Rated output power	3 kW
Max. Apparent Output Power	3 kVA
Back-up Switch Time	<10 ms
Rated Output Voltage	L/N/PE, 230 V
Rated Frequency	50/60 Hz
Rated Output Current	13 A
THDv(@linear load)	0.03
Input AC (Grid side)	
Rated Input Voltage	L/N/PE, 230 V
Rated Frequency	50/60 Hz
Rated Input Power	6 kW
Max. Input Current	26 A
Output AC(Grid side)	
Rated Output Power	3 kW
Max. Apparent Output Powe	3 kVA
Phase	Single phase
Rated Grid Voltage	L/N/PE, 230 V
Grid Voltage Range	180 ~ 270 V
Rated Grid Frequency	50 / 60 Hz
Rating Grid Output Current	13 A
Power Factor	>0.99 (0.8 leading - 0.8 lagging)
THDi	< 3%
Protection Class	I

Overvoltage category	III
Efficiency (Inverter side)	
Max Efficiency	>94.5%
Protection	
Anti-Islanding Protec-tion	Integrated
Insulation Resistor Detection	Integrated
Residual Current Monitoring Unit	Integrated
Output Over Current Protection	Integrated
Output Short Protection	Integrated
Output Overvoltage Protection	Integrated
Battery Reverse Protection	Integrated
Battery Breaker	Integrated
Features	
AC Connection	Terminal block
BAT Connection	Terminal block
Communication	LAN, WiFi (optional)
Warranty	5 years standard
General Data	
Display	LED
Dimensions(W*H*D)	640*725*250 mm
Weight	64 kg
Topology	Transformerless
Operation Temperature Range	-10 ~ +50 °C
Ingress Protection	IP65
Relative Humidity	0 ~ 100%
Noise Emission	<30 dB(A) @1m
Cooling Concept	Natural convection
Max. Operation Altitude	3000 m
Battery pack (SMILE-BAT-5P)	
Battery Type	LFP (LiFePO4)
Weight	48 kg
Dimension for One Pack (W*H*D)	640*345*250 mm

Ingress Protection	IP65
Energy Capacity	5.04 kWh
Usable Capacity	4.79 kWh
DoD	95%
Nominal Voltage	48 V
Operating Voltage Range	45 ~ 54 V
Internal Resistance	≤ 20 mΩ
Max. Charging / Discharging Current*	60 A
Operating Temperature Range	Charge：0＜T＜50℃ / Discharge：-10＜T＜50℃
Monitoring Parameters	System voltage, current, cell voltage, cell temperature, PCBA temperature
BMS Communication	CAN and RS485 compatible
System	
Grid Connection Standard	AS 4777.2, G98-1
Safety	IEC62040, IEC62619,
EMC Standard	EN61000-6-1/-2/-3/-4
Warranty	5 Year product warranty,10 Year performance warranty
Transportation	UN38.3

* Max. charge/discharge current derating will occur related to temperature and SOC.

Appendix 1: Communication Connection Figure

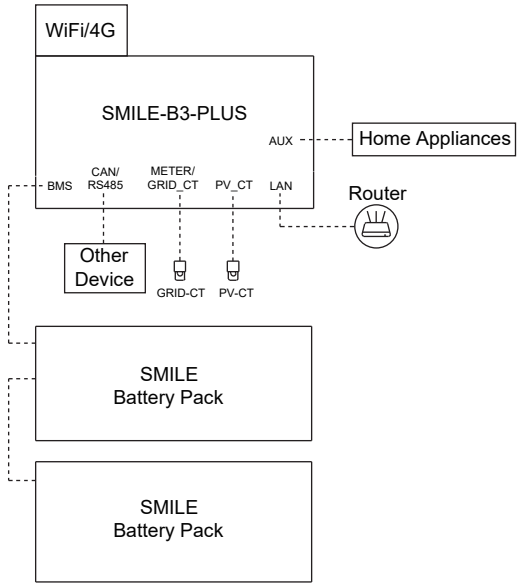

Connect the CT

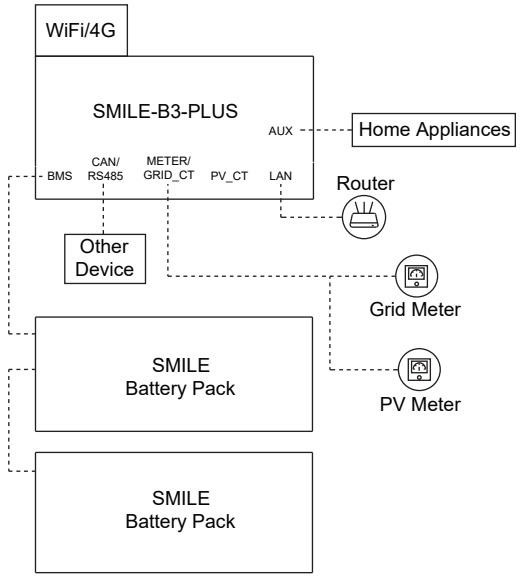

Connect the Meter

Appendix 2: Regional Application Standard

Choose the correspond Regional Application Standard, the power quality modes Volt-var and VoltWatt will running automatically. (Only for regions with AS/NZW 4777.2 safety regulations).

Regional application Standard	Electric Company
Australia A	N/A
Australia B	N/A
Australia C	N/A
Victoria	Ausnet Services
	Jemena
	Citipower
	Powercor
	United Energy
Queensland	Energex
	Ergon Energy
South Australia	SA Power Networks
New South Wales	Ausgrid
	Endeavour Energy
	Essential Energy
Western Australia	Horizon Power
	Western Power
Australian Capital Territory	Evoenergy
Northern Territory	NT Power and Water
Tasmania	Tas Networks
New Zealand	Vector