AlphaESS
your smart energy

COMMERCIAL & INDUSTRIAL ENERGY STORAGE SOLUTION

“MAKE SMART

CLEAN **ENERGY** ACCESSIBLE TO

EVERY PERSON AROUND THE GLOBE

CONTENTS

1 ABOUT ALPHAESS

Founded in 2012, AlphaESS is now one of the world-leading energy storage solution and service providers. The company specializes in delivering pre-eminent fit-for-purpose product solutions covering the full power range from small portable power stations all the way up to large utility-scale solutions. With 30+ subsidiaries in the globe, AlphaESS provides local services and supports 150,000+ systems actively running in over 100+ countries.

12+
Years Since Establishment

200+
Patents in the ESS field

150,000+
Systems Installed Globally

100+
Countries & Regions

TOP 1

2022-2023 TOP 1
Australia Market Share
from SunWiz

TOP 5

2023 H1 TOP 5
Residential ESS Provider in Germany
from EUPD Research

TOP 6

2021 TOP 6 Supplier of
Global Residential Storage Systems
from IHS Markit

ESG Transparency Award

iF & Reddot & G-mark Design Award

TOP BRAND PV
(STORAGE & INVERTERS)

GLOBAL SERVICE NETWORK

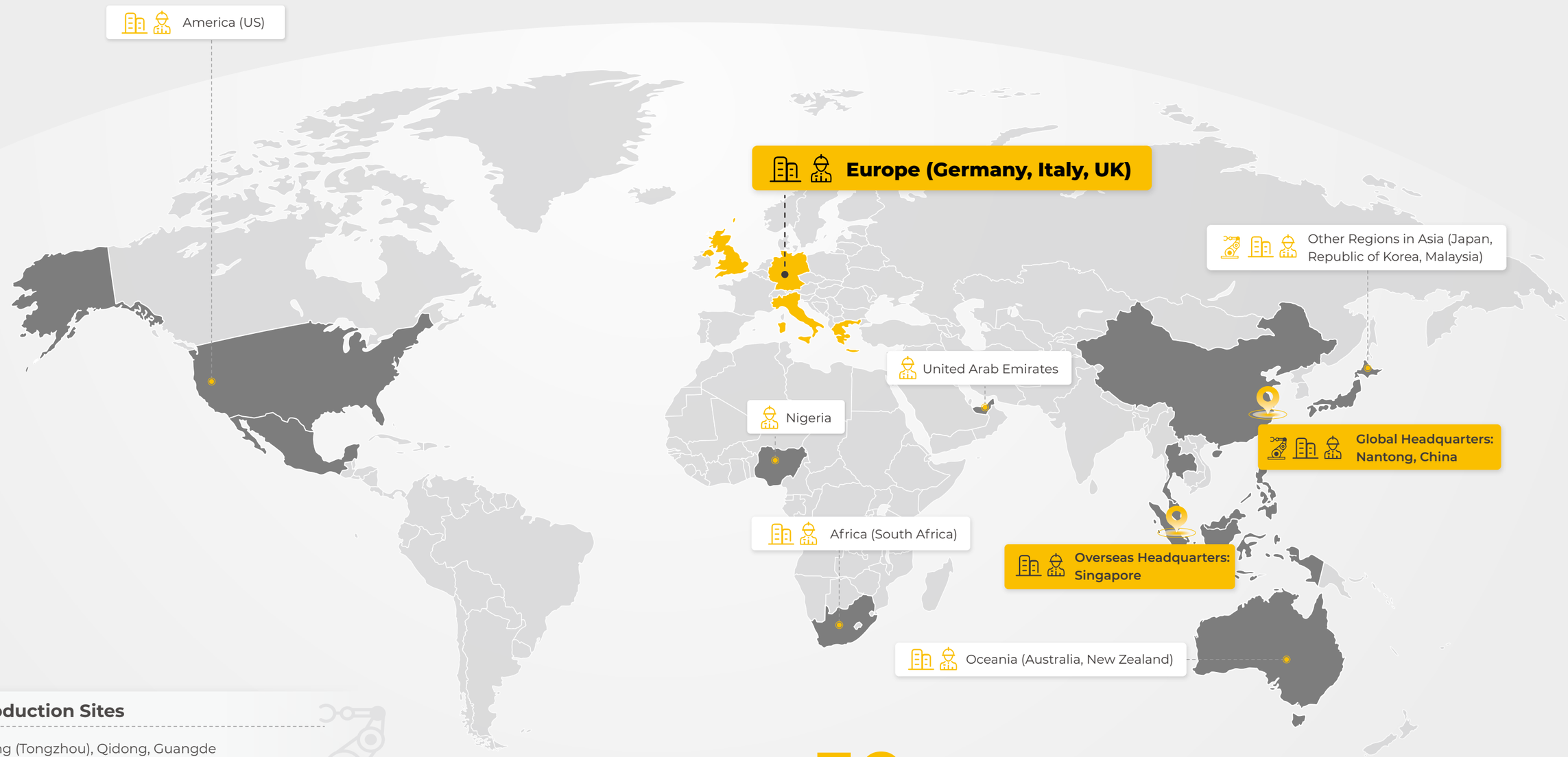

4 Production Sites

China: Nantong (Tongzhou), Qidong, Guangde

Malaysia: Penang

4 R&D Centers

Nantong (Tongzhou), Suzhou, Nanjing, Tianjin

30 Subsidiaries

China: Suzhou, Beijing, Tianjin, Shenzhen, Chengdu, and Nanjing.

Global: European countries, including Germany, Italy, and the UK; Oceanian countries like Australia and New Zealand; the United States; Asian countries like Japan, Republic of Korea and Malaysia.

Note: The data shows the company's global presence as of the end of 2023.

2 THE STORY OF "STORION"

C&I SOLUTION

2024 1.5 GWh and LSES DEPLOYED WORLDWIDE

Since the launch of our Commercial and Industrial solutions until 2024, AlphaESS has installed a total of over 1.5 GWh C&I systems around the globe. The majority of these deployments have been in regions lacking reliable power infrastructure, providing millions of individuals access to dependable and sustainable clean energy sources.

2018 INTERNATIONAL RECOGNITION

Our rural electrification projects in Myanmar was selected by the Intersolar Europe committee as one of the 10 finalists for “outstanding projects award”.

2017 MILESTONE PROJECT OVER 1 MWH

AlphaESS completed its first large C&I project in Cambodia, installing a 500kW/1.26MWh energy storage container. This milestone project provides steady and cheap electricity to a local pharmaceutical factory and its workers.

2015 THE FIRST C&I PROJECT

The first STORION series for commercial application were delivered in six petrol stations (20kW/60kWh × 6) in remote areas of Indonesia where power outages were frequent.

2013 THE ORIGIN OF THE NAME

STORage + Lithium-**ION** = **STORION**

TODAY

With a decade of evolvement, the STORION is now a series dedicated for commercial and industrial applications in AlphaESS. Our STORION solution for rural electrification and power resilience applications today are ranging from 30kW to 500kW inverter power and 54kWh to 2MWh in storage capacity.

APPLICATIONS

RURAL ELECTRIFICATION

Lighting Up Villages,
Powering Up Lives

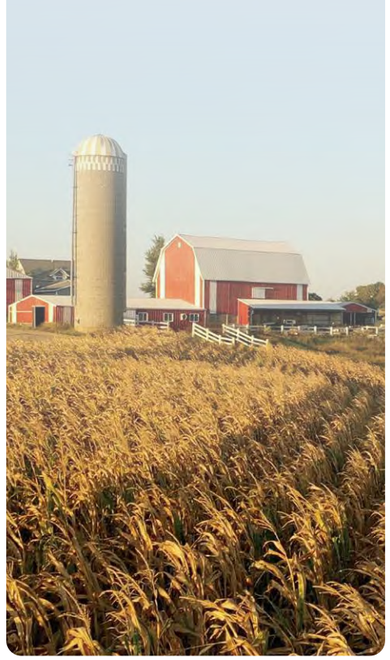

SCHOOLS, HOSPITALS AND BANKS

Energy Efficiency for Vital Spaces
Where Every Watt Matters

COMMERCIAL OFFICE BUILDINGS

Energy Resilience for
Business Excellence

SMALL FACTORIES

Fueling Industry,
Energizing Growth

ISLANDS

Island Energy Independence,
Harnessing Power from Nature

MINING SITES

Unearth the Power,
Illuminate the Depths

3 PRODUCT INTRODUCTION

STORION-TB250/500

250 / 500 kW | 630 ~ 2090 kWh

STORION-LC372

372 kWh per cabinet, up to 4.47 MWh

AlphaCS-H20-DC-LC

3727.3 kWh

STORION-TB250/500

250/500 kW | 630 ~ 2090 kWh

- **AC-Coupled and DC-Coupled solutions are both available**
- **A liquid-cooling solution offers enhanced safety and extended lifespan**
- **On/Off-grid switching time≤ 20ms**
- **Flexible capacity configuration**

  209 kWh per cabinet, up to 10 cabinets in parallel
  Battery capacity ranges: 630 ~ 2090 kWh
- **DC-Coupled up to 160% PV oversize**
- **Various working modes for different application scenarios**
- **LFP battery cell, high security, long cycle life**

AC Container (PCS included)

Liquid-cooling Battery Cabinet

STORION-TB250/500 is an AlphaESS liquid-cooling C&I product for large-scale C&I application, the container has EMS, PCS, STS, transformer, air conditioner, fire extinguishing devices and other equipment. Customers can choose different power range according to their application scenarios.

Easy Installation

Devices and batteries are pre-assembled at the factory

Only external wiring at first installation

Flexible Configuration

PCS is available in 250/500 KVA two options

The battery capacity ranges from 630 kWh ~ 2090 kWh

Safety

Active tempreature monitoring and control at 23 ± 2°C

Smoke & temperature detection, automatic alarm system

Expandable Capacity

AC-coupled solution supports a maximum of 4 systems in parallel, reaching a maximum of 2MW power and 8MWh battery capacity.

SOLUTIONS

AC-Coupled

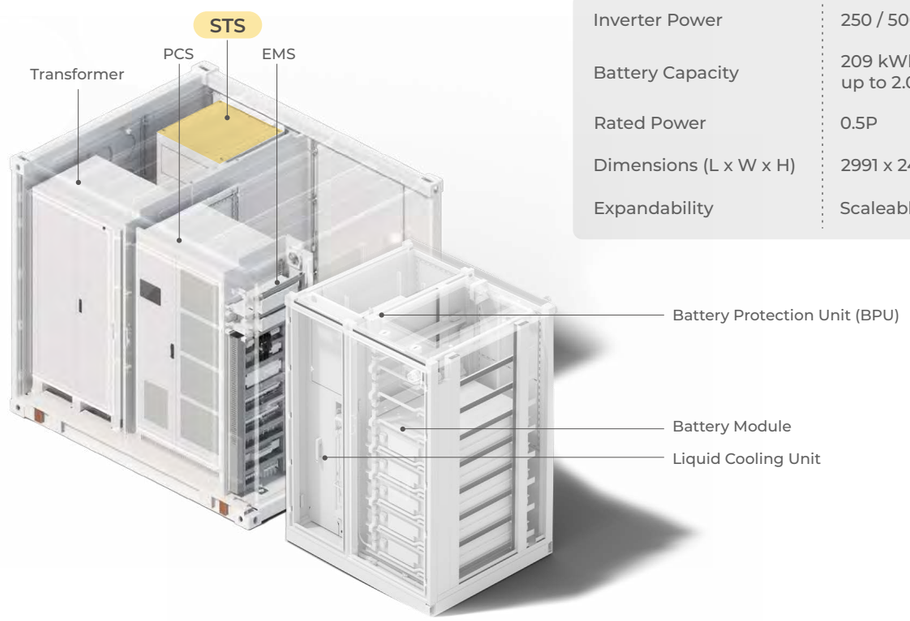

Inverter Power	250 / 500 kW
Battery Capacity	209 kWh per cabinet, up to 2.09 MWh
Rated Power	0.5P
Dimensions (L x W x H)	2991 x 2438 x 2591 mm
Expandability	Scaleable

DC-Coupled

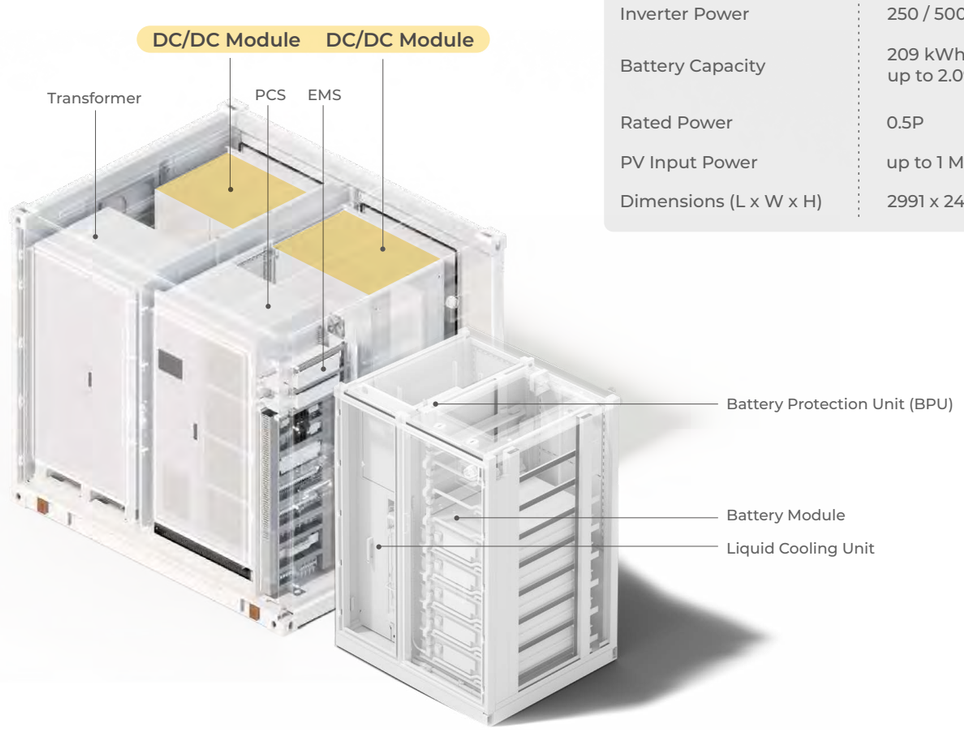

Inverter Power	250 / 500 kW
Battery Capacity	209 kWh per cabinet, up to 2.09 MWh
Rated Power	0.5P
PV Input Power	up to 1 MWp
Dimensions (L x W x H)	2991 x 2438 x 2591 mm

SOLUTIONS

AC-Coupled System

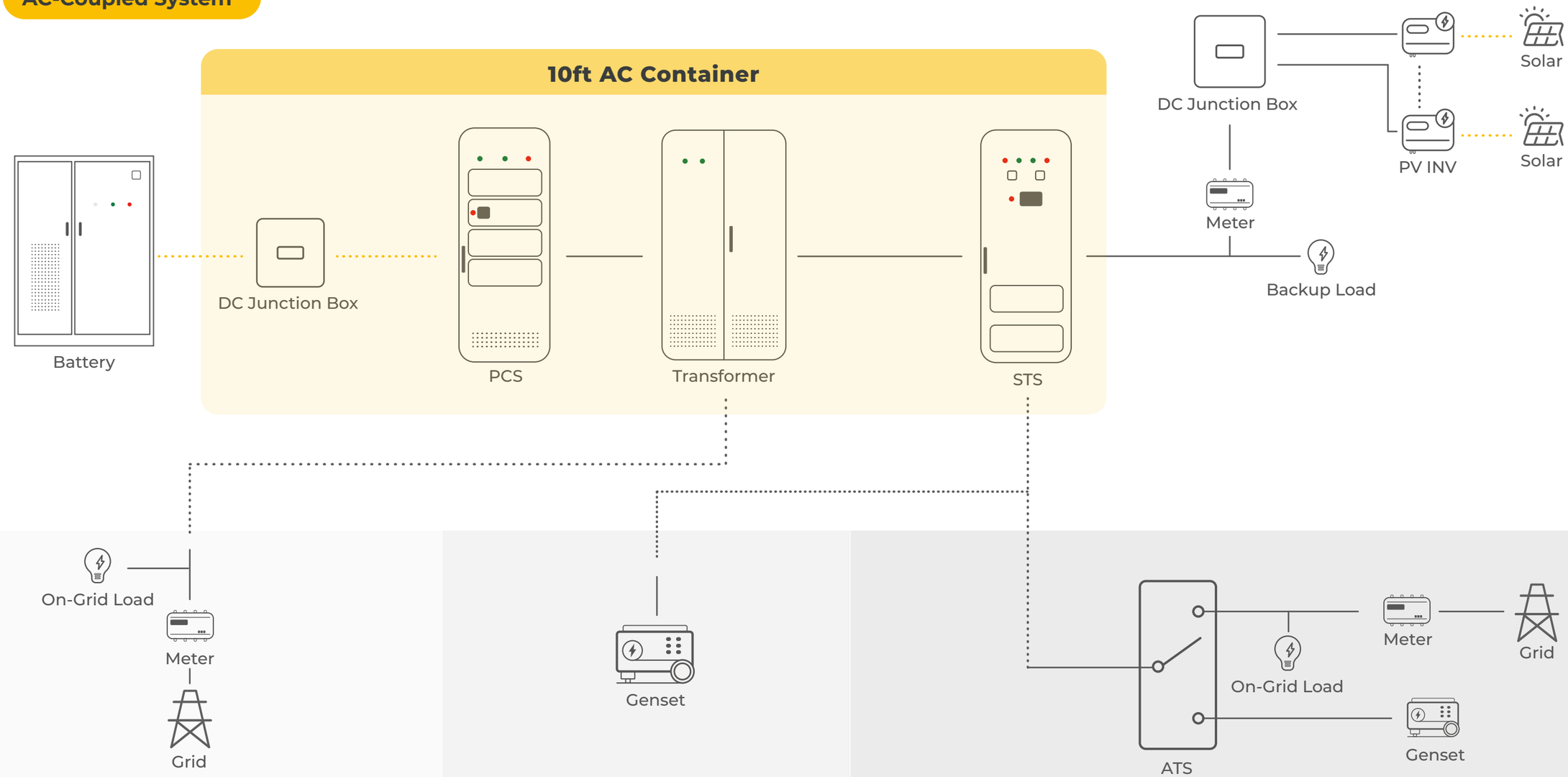

OPTION 1

On-Grid System

By integrating grid, solar, and battery sources, our system allows customers to select various operating modes. In the event of a grid outage, the on-grid load will be disconnected, and the system will automatically switch to supplying backup load, keeping you unaffected by power disruptions.

OPTION 2

Off-Grid System

The generator is managed by the EMS via dry contact, allowing users to control its operation based on preset schedules, battery SOC, or manually. This setup ensures continuous operation of either the generator or the STORION system at any given time. Both the diesel generator and the STORION system work together seamlessly, guaranteeing a reliable power supply for customers residing in remote off-grid areas.

OPTION 3

Dual Power Supply System

This solution requires an additional ATS device for seamless power source switching. In the event of a grid outage, the ATS will automatically switch to the generator side. The EMS controls the generator's operation, ensuring continuous power supply. This setup ensures that either the generator or the STORION system is always operational, guaranteeing uninterrupted backup power for essential loads.

SOLUTIONS

DC-Coupled System

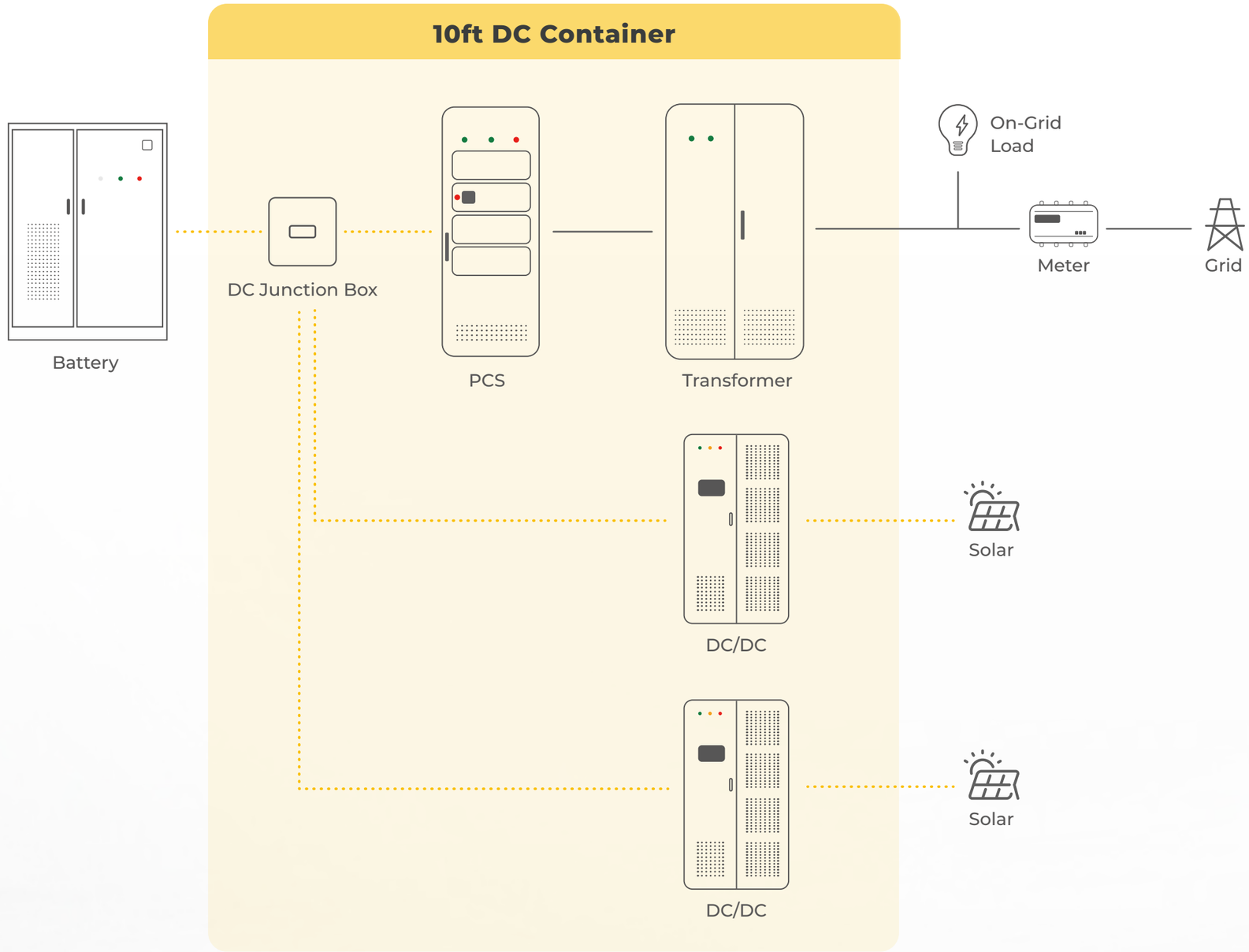

- **For some scenarios with PV oversizing requirements**
  - Need extra DC/DC modules
  - Support Max. two DC/DC modules in parallel
  - Each DC/DC module has 8 MPPTS
  - Adapt to multi-orientation PV arrays to maximize energy output
- **Maximum 160% PV oversizing**
- **Integrated DC/DC modules in containers, saves space and installation time**

COMPONENTS

DC / DC Module

- 400kVA, 8MPPTs
- Max. 2 Modules in Parallel Operation

The DC/DC module can be integrated into the TB series configuration to enable a DC-coupled solution. This module consists of eight 50kW DC/DC converters, each equipped with 8 MPPTs, and supports two units connected to TB series PCS in parallel. For TB500, up to 160% DC oversizing is attainable, optimizing energy utilization. During sunny conditions, part of the electricity output can be directed to supply the load while the other part charges the battery, effectively maximizing the self-consumption rate.

The TB series three-phase battery inverter is one of the best products on the market today. It has six power options to match different customer needs, and the product has a modular design with modular STS and Transformer for easy installation and lining up.

PCS TB250/500 Battery Inverter

- 4/8 × 62.5kVA PCS
- 340 ~ 460V , 50/60Hz, 3L/N/PE

PCS is an important component of a microgrid. It can bidirectional invert DC and AC, and adjust the current waveform to be consistent with the grid, to realize the interaction with the grid. It supports a range of voltages up to 460V, so multiple batteries and PV arrays can be connected in series or parallel.

STS 800kVA

- On/Off-Grid Switching Time ≤ 20ms

STS is responsible for switching between on-grid and off-grid states. When the system detects a grid abnormality, the STS can switch to off-grid mode within 20ms. This ensures that the electronic equipment connected to the system is not affected by a power outage. A rated power of 800kW ensures circuit safety during switching.

Transformer 500kVA

- Isolation and Transfer from Delta Grid to Star Grid

The transformer has a maximum input voltage of 380V and a maximum output voltage of 400V. In addition, it supports switching between star and delta circuits to isolate the grid and the devices connected to the system, thus maximizing the protection of the system from grid fluctuations.

COMPONENTS

BATTERY CLUSTER SYSTEM

Battery Module

Module	**M166280-S**
Nominal Capacity	46.5 kWh
Max. Charging/Discharging Current	140 A
Depth of Discharge	98%(On-Grid), 90%(Off-Grid)

Configuration Rack

BLMU	**HV1500250-II**
Rated Voltage	Max. 1500V
Rated Current	Max. 250A
Operation Temperature	-30 ~ 50 °C
Dimensions (W x D x H)	526 × 650 × 250mm
Weight	30 kg

Battery Cabinet

Module	**STORION-LC372**
Nominal Capacity	209.6 kWh
Number of Cabinet	3 ~ 10
Dimensions (W x D x H)	810 x 1110 x 237.5 mm
Ingress Protection	IP 55
Operating Temperature Range	-30 °C ~ 50 °C

WIRING DIAGRAM

AC-COUPLED SOLUTION

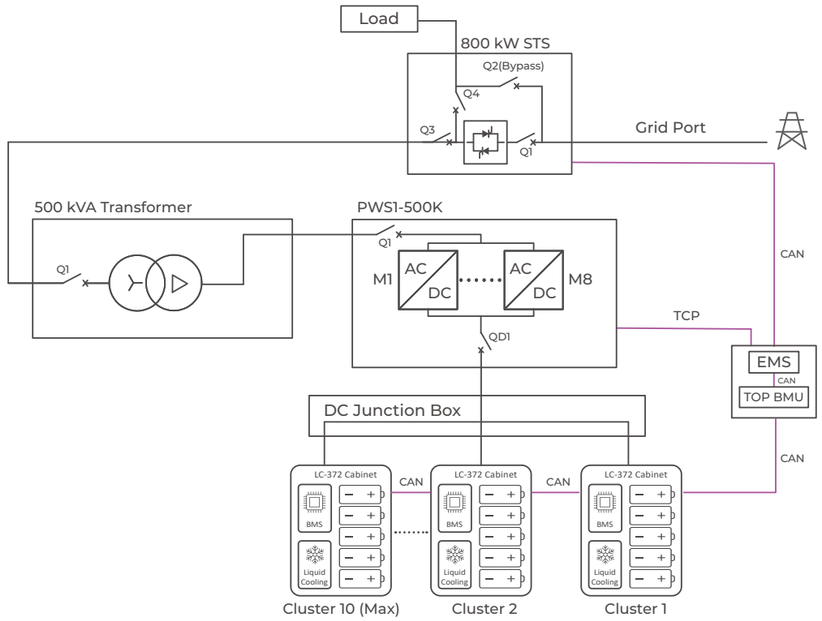

DC-COUPLED SOLUTION

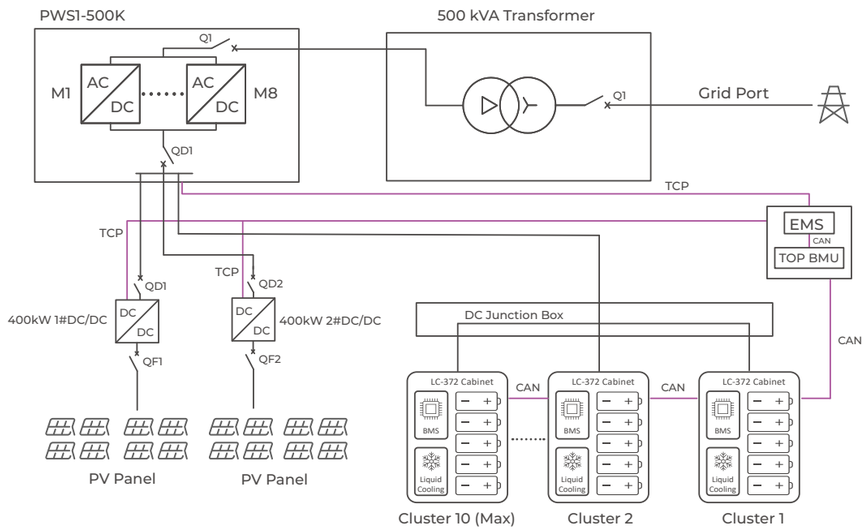

MULTIPLE UNITS EXPANSION

SCALEABLE

STORION-TB250/500 CONTAINERS IN PARALLEL

TOTAL POWER CAPACITY: **250kW/500kW/1MW/2MW...**

STORION-LC372

372.7 kWh / 1500 V Liquid-Cooling Battery Cabinet

Easy Installation
Most devices are pre-assembled at the factory
Just install the battery and external wiring at first installation

Liquid-cooling solution
Built-in advanced liquid-cooling system provides excellent temperature management for battery cabinet. Reduced risk and longer life span.

Safety
Built-in aerosol and sprinkler system. Real-time monitoring of battery cells and ambient temperatures. Once the abnormal temperature and smoke is detected, the fire suppression system will be activated immediately.

Expandable Capacity
Single-system access up to 12 liquid-cooling battery cabinets, expandable to 4.47 MWh.

STORION-LC372

Model	Storion-LC-372
System Parameters	
Dimensions (W x D x H)	1700 x 1500 x 2450 mm
System Weight	4.65 t
Ingress Protection	IP55
Rated Voltage	1331.2 V (8 Modules)
Nominal Capacity	372.7 kWh (8 Modules)
Rated Charging and Discharging Power	186.3 kW (0.5C)
Battery Modules Connection	4 ~ 8 in series connection
Battery Chemistry	LFP (LiFePO4)
Cooling	Liquid Cooling
Product Type	Outdoor Cabinet
Fire-Fighting System	Aerosol + Sprinkler
Battery Parameters	
Battery Model	M166280-S
Rated Voltage	166.4 V
Nominal Capacity	46.5 kWh
Rated Charging and Discharging Power	23.2 kW (0.5P)
Ingress Protection	IP67
Weight	333 kg
Dimensions (W x D x H)	810 x 1100 x 237.5 mm
Operating Temperature Range	-30 °C ~ 50 °C
Certification	
Transportation	UN 38.3
Compliance	IEC 62619, IEC 62477, IEC 61000, UL 9540A, UL 1973

AlphaCS-H20-DC-LC

3.72 MWh / 1500V Liquid-Cooling Battery Container

- Ultra-large capacity energy storage for diverse application scenarios (Utility projects)
- Liquid-Cooling System Enhances Temperature Control and Durability
- Multi-level safety protection with European ICE and American UL certification
- Built-in BMS system, real-time monitoring and management
- Noise reduction option available (< 75dB)

20FT CONTAINER

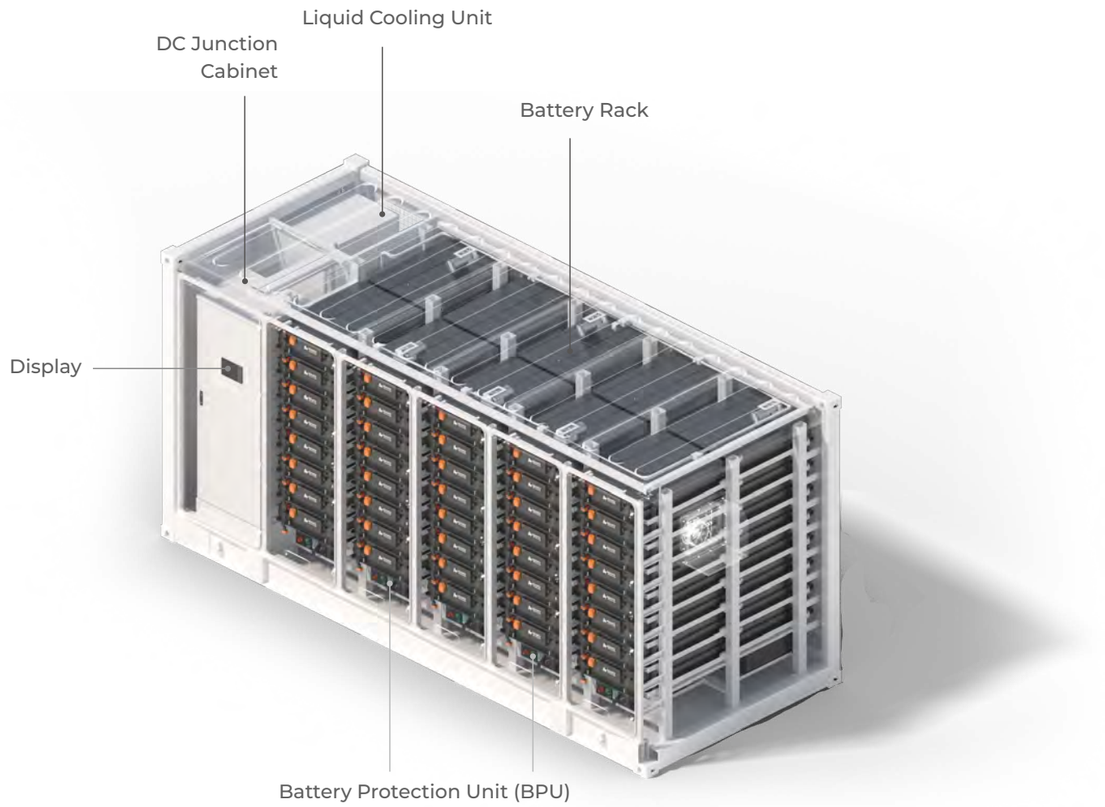

Battery Type	LiFePO4
Nominal Capacity	3727.3 kWh
Weight	35t
Dimensions (W×DxH)	6058 x 2438 x 2896 mm
Housing	IP55
DC Voltage Range	1123.2~1497.6V
Rated Power	0.5 P
Cooling	Liquid Cooling
Operating Temperature	-30°C~ 50°C

AlphaCS-H20-DC-LC

Model	AlphaCS-H20-DC-LC
System Parameters	
Dimensions (W x D x H)	6058 x 2438 x 2896 mm
System Weight	35 t
Ingress Protection	IP55
Rated Voltage	1331.2 V
Nominal Capacity	3727.3 kWh
Rated Charging and Discharging Power	1863.6 kW (0.5 P)
Battery Cluster Connection	10 Clusters in Parallel
Battery Chemistry	LFP (LiFePO4)
Cooling	Liquid Cooling
Product Type	Outdoor Container
Fire-Fighting System	Aerosol + Sprinkler (Perfluorohexanone is optional)
Battery Parameters	
Battery Model	M166280-S
Rated Voltage	166.4 V
Nominal Capacity	46.5 kWh
Rated Charging and Discharging Power	23.2 kW (0.5 P)
Ingress Protection	IP67
Weight	333 kg
Dimensions (W x D x H)	810 x 1110 x 237.5 mm
Operating Temperature Range	-30 °C ~ 50 °C
Certification	
Compliance	IEC 62619, IEC 62477, UL 9540A, UL 1973, IEC 61000

4 SMART ENERGY

EMS 4.0

EMS4.0, the fourth generation of AlphaESS's EMS products, was officially released in 2024. Since the first release in 2013, the R&D team has continually updated the EMS to meet market demands and technological advancements. Its robust performance and features assist users in commercial and industrial sectors in tackling complex issues, adapting to various applications, and offering versatile solutions.

Alpha ESS EMS 4.0

- **Rich Functions**

  Self-Consumption; multiple time periods charging and discharging; SOC calibration; PmeterOffset; Peak Shaving; Modbus scheduling (RTU); Battery-only function; Diesel control; Dual power supply function; API data reading; Remote upgrade

- **Friendly Display**

  SCADA monitoring system, display screen with Windows operating system; Space-saving and Security

- **Space-Saving and Security**

  Integrated battery DC convergence cabinet in the box, and external SCADA HMI display screen, space-saving and an additional layer of box protection, increasing security.

- **Reserved Communication Port**

  It is convenient for users to control other equipments through the STORION system.

DC Junction Cambinet

AlphaCloud (C&I Version)

- Customizable system scheme drawing for clearer demonstration of energy flow.
- Cell level monitoring to help monitor the energy storage system in all aspects.
- Visualization of energy production and consumption statistics, helping users to clearlyunderstand the situation of power consumption.
- Remote configuration and upgrading, eliminating the pain point that installers need come to the site to deal with all issues.
- One page contains monitoring of all systems installed, helping users to carry out daily maintenance efficiently.

AlphaESS
your smart energy

ENERGY STORAGE SOLUTIONS

Residential | Commercial & Industrial | Utility

Alpha ESS Europe GmbH

europe@alpha-ess.de

www.alphaess.de

Paul-Ehrlich-Straße 1a, Langen,
Hessen D-63225 Germany