V01

INSTALLATION MANUAL OF ENERGY STORAGE SYSTEM STORION-LC-TB125



@AlphaEnergyStorageSystem @AlphaESS @alpha_ess @AlphaESS www.alphaess.com

Alpha ESS Co., Ltd.
+86 513 8060 6891
info@alpha-ess.com
www.alphaess.com
No. 1086 Bihua Road, Tongzhou District, Nantong City,Jiangsu Province, 226300, P.R. China

Alpha ESS International Pte. Ltd.
+65 6513 1125 / +65 6513 1126
Singapore@alpha-ess.com
16 Science Park Drive,#05-01 DNV GL Technology Centre, Singapore 118227

Alpha ESS Europe GmbH
+49 610 3459 1601
europe@alpha-ess.de
www.alphaess.de
Horizon Tower 17.OG, Alfred-Herrhausen-Allee 3-5, 65760 Eschborn, Germany

Alpha ESS Australia Pty. Ltd.
+61 02 9000 7676
techsupport@alphaess.au
www.alphaess.au
8/15-21 Gibbes Street, Chatswood, NSW 2067 Australia

Alpha ESS UK Co., Ltd
+44 330 043 2610
info@alpha-ess.com
Drake house, Long street, Dursley, gl11 4hh UK

Alpha ESS Italy S.r.l.
+39 339 462 4288
info@alphaess.it
www.alphaess.it
Via Del Molinuzzo 83, 59100 Prato (PO), Italy

Alpha ESS NZ Ltd.
+64 0800 769 377
info@alpha-ess.com
www.alpha-ess.co.nz
19 Arrenway Drive, Albany, 0630, New Zealand

Alpha ESS USA, Inc.
+1 800 220 0725 (Service Inquiries)
service@alphaess.us
www.alphaess.us
2180 S Ivanhoe St. Unit 5 Denver.CO 80222 USA

Alpha ESS South Africa (Pty.) Ltd.
+27 010 745 5653
measervice@alpha-ess.com
Johannesburg, South Africa

Alpha ESS Korea Co., Ltd
info@alpha-ess.com
2F, 19-4, Nohyeong 11-gil, Jeju-si, Jeju-do, Republic of Korea

Alpha ESS Malaysia SDN. BHD.
info@alpha-ess.com
Plot 49 & 63, Lorong Perusahaan 2b, Kulim Industrial Estate, 09000 Kulim, Kedah, Malaysia

Alpha ESS Benelux B.V.
contact@alphaess.nl
www.alphaess.nl
Room 113 F1, High Tech Campus 41, 5656 AE Eindhoven, Netherlands

Alpha ESS Japan, Inc.
info@alpha-ess.com
www.alphaess.jp

Copyright Statement

This manual is copyrighted by Alpha ESS Co., Ltd., and all rights are reserved. Without the written permission of our company, no organization or individual may extract or copy part or all of the content of this document without authorization, and may not disseminate it in any form. Unauthorized modification or disassembly of the system is strictly prohibited.

Please keep this manual safe and strictly follow all safety and operating instructions in this manual. Do not install or operate the system before reading this manual

Notice

The products, services, or features you purchase are subject to the AlphaESS commercial contract and terms, and some of the products, services, or features described in this document may not be within the scope of your purchase or use. Unless otherwise agreed in the contract, AlphaESS makes no express or implied warranties regarding the content of this document.

Due to product version upgrades or other factors, the content of this document may be updated from time to time. This document is for guidance only and does not constitute any form of commitment. Please refer to the actual product for accuracy.

Preface

The STORION-LC-TB125 energy storage system has been developed by AlphaESS over many years and has been successfully applied in many fields. It is a high-tech product with excellent quality and stable performance that meets today's power supply needs.

This manual is intended to address product installation and usage issues. It provides detailed installation and usage information, including safety instructions, product introduction, installation, and user guidelines.

Symbols

The following symbols may appear in this document. Please note that they represent the following meanings:

Symbol	Description
CAUTION	Indicates potential risks that may cause system malfunctions or errors if not avoided.
WARNING	Indicates moderate potential hazards that may lead to system damage or personal injury if not avoided.
DANGER	Indicates high potential hazards that may result in death or serious injury if not avoided.
NOTE	Supplementary explanation of key information in the main text. "Explanation" is not a safety warning information and does not involve personal, system, or environmental injury.

Terminology

1. Battery Management System (BMS)

Monitors the operational information of battery cells, battery packs, and system units (such as voltage, current, temperature, and battery protection parameters), and intelligently assesses the state of charge (SOC), state of health (SOH), and total energy output to ensure battery safety.

2. Energy Management System (EMS)

Consists of data collection and monitoring systems and supports automatic power generation control, economic dispatch control, and power system status and safety analysis.

3. Battery Energy Storage System (BESS)

A combination of series- and parallel-connected batteries and the BMS, used to connect the DC side of PCS.

4. Energy Storage System (ESS)

A combination of a battery system and power conversion systems (PCSs) such as STORION-LC-TB125. An ESS can be used as an independent power source or be directly controlled by a monitoring system.

5. Photovoltaic (PV)

A PV power system is a new type of power generation system that utilizes the photovoltaic effect of semiconductor materials in solar cells to directly convert solar radiation energy into electrical energy.

6. On-Grid System

On-grid systems typically consist of PV strings, PCSs, battery systems, and the power grid. When the electricity generated by the PV strings is sufficient, the excessive electricity can be fed into the grid. When the electricity generated by the PV strings and battery system is insufficient, the grid can supply power to the load.

7. Off-Grid System

Off-grid systems are suitable for areas without a grid or where the grid power is unstable. These systems typically consist of PV strings, energy storage inverters, battery systems, and generators. When the battery has sufficient energy, the load is powered by the PV system and the battery. If the battery energy is insufficient, the generator powers the load while charging the battery system.

Version Information

Version	Date	Content
V01	2025.07.29	New

Contents

Copyright Statement 3

Notice 4

Preface 5

Symbols **5**

Terminology 6

Version Information 8

Contents 9

1. Introduction 12

1.1 **System Model Description** **12**

1.2 **System Introduction** **12**

1.3 **Personal Safety** **13**

1.3.1 General Requirements 13

1.3.2 Personnel Requirements 14

1.4 **Product Safety** **15**

1.5 **Electrical Safety** **16**

1.5.1 Grounding Requirements 16

1.5.2 Cabling Requirements 16

1.6 **Mechanical Safety** **17**

1.6.1 Transportation Safety 17

1.6.2 Hoisting Safety 18

1.6.3 Working at Heights Safety 19

1.6.4 Aerial Safety 19
1.7 Environmental Requirements 19
1.7.1 General Requirements 19
1.7.2 Site Selection Requirements 20
1.7.3 Foundation Requirements 23
2. Product Introduction 25
2.1 Product Features 25
2.2 Product Composition 25
2.2.1 Appearance Introduction 25
2.2.2 Indicator Light Function Description 27
2.2.3 Outdoor Cabinet Dimensions 27
2.2.4 Outdoor Cabinet Internal Design 28
2.2.5 Equipment Operation Switch Location Overview 30
2.2.6 Cable Entry 31
3. Product Components Introduction 32
3.1 M166314-52S-EX 32
3.2 HV-Box 33
3.3 ALPEMS500 Interface Definition 35
3.4 PCS 37
4. Installation 39
4.1 Installation Location 39
4.1.1 STORION-LC-TB125 Installation Location Requirements 39
4.1.2 STORION-LC-TB125 with ALPSTS-300-O Cabinet Installation Location Requirements 41
4.2 STORION-LC-TB125 Outdoor Cabinet Fixing 42
4.2.1 Parts List 42
4.2.2 STORION-LC-TB125 Outdoor Cabinet Installation 42

4.3 **Electrical Connection** **46**

4.3.1 Safety Precautions 46

4.3.2 Cabinet Grounding Installation 47

4.3.3 Single Unit On-grid and Meter cabling 47

4.3.4 Off-Grid Mode cabling 51

4.3.5 System Parallel Connection cabling 54

4.3.6 Off-Grid Parallel Connection cabling 57

4.3.7 DC Expansion cabling 63

4.3.8 MSD installation 65

5. Startup and Operation **68**

6. Technical Contact **69**

7. Attachment **70**

System Installation of a Torque Wrench **70**

System Normal Voltage Range Table **70**

1. Introduction

1.1 System Model Description

Model Identification

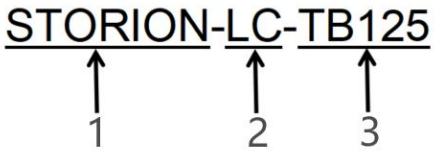

Model Description

Identification	Meaning	Details
1	Series Name	Commercial & Industrial Energy Storage System Name
2	Cooling Method	Liquid Cooling
3	System Composition	TB represents AC-coupled system, 125 represents a 125kW system

1.2 System Introduction

The STORION-LC-TB125 is equipped with a 125kW PCS, paired with M166314-52S-EX batteries, and optionally configured with an STS cabinet for On-grid/off-grid switching. The total capacity is 261.248kWh.

The system is purely AC-coupled. Photovoltaics can be installed on either the grid side or the load side. The specific topology is shown below:

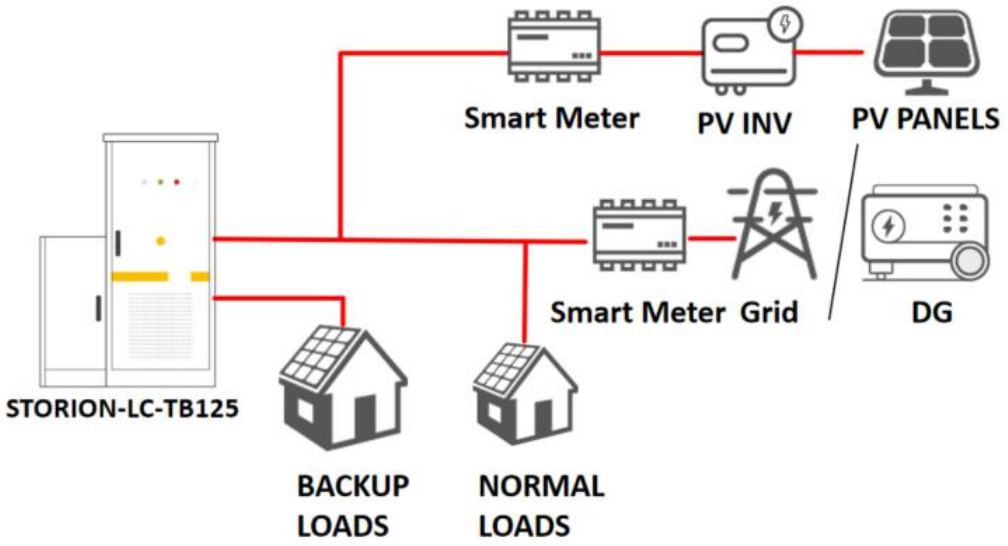

1.3 Personal Safety

1.3.1 General Requirements

1. This manual contains important information regarding product installation, usage, etc. Read it carefully before operation.
2. Keep this manual properly for installation, operation, and maintenance.
3. Strictly follow the instructions in this manual for installation, operation, and maintenance to avoid product damage, personal injury, and property loss.
4. For systems where commissioning is not completed, ensure the system is shut down before the installation personnel leave the site.
5. If a fault occurs in a normally operating system, first refer to the troubleshooting table to eliminate the fault. If the problem is not resolved, contact AlphaESS engineers promptly. Keep the system shut down until you receive a response from AlphaESS engineers.
6. To ensure optimal reliability and meet warranty requirements, the energy storage system must be installed, operated, and maintained according to the instructions in this manual. Our company does not assume any liability for damages resulting from violations of general safety operating requirements or safety standards for the design, production, and use of the product. Product damage caused by such violations is not covered under warranty.

7. Erect clear signage at breakers for PV, batteries, PCS, distribution boxes, etc., to prevent accidents caused by accidental closure.
8. Ensure the system's connection and usage methods comply with relevant regulations to prevent arcs or electric shock accidents.
9. Erect warning signs or set up safety warning tape near the operating area.

1.3.2 Personnel Requirements

1. Operators must hold a professional qualification certificate issued by AlphaESS or authorized by AlphaESS.
2. Operators must be familiar with the product, including its composition and working principles.
3. Operators must be familiar with the product manual and strictly follow it for installation, operation, and maintenance.
4. When performing any product-related work, ensure at least two operators are present. Do not perform maintenance work until the product is powered off.
5. Personnel involved in special scenarios such as electrical operations, working at heights, or operating special equipment must possess the special operation qualifications required by the local country/region.
6. Replacing equipment or components (including software) must be performed by authorized professionals.
7. The system contains high voltage; accidental contact may pose a fatal electric shock hazard. Ensure proper protection is in place when performing live testing.
8. When performing electrical connections, trial runs, or product maintenance, use a multimeter to measure electrical parameters to ensure they meet requirements. Use the multimeter correctly to ensure personnel safety.

CAUTION

During installation, operation, and maintenance, the following installation tools and protective equipment are required.

The installation tools are listed in the following table.

Number	Name	Model/Specification	Unit	Qty
1	Diagonal pliers	/	pcs	1
2	Screwdriver	2/4/6/8mm	pcs	1
3	Cable tie	/	pcs	1
4	Multimeter	DC 1000V	pcs	1
5	Impact drill	/	pcs	1
6	Socket wrench	Socket wrench set	pcs	1
7	Open end wrench	Open end wrench set	pcs	1
8	Socket torque wrench	/	pcs	1
9	PV cable connector tool	/	pcs	1

The protective equipment is listed in the following table.

Number	Name	Number	Name
1	Safety Shoes	4	Safety Goggles
2	Safety Helmet	5	Dust Mask
3	Safety Gloves		

1.4 Product Safety

1. Warning signs contain important information for the safe operation of the product. Ensure that the warning signs are clear and visible and prevent any deliberate damage. If any sign is damaged, it should be replaced immediately.
2. The key must be removed from the system after formal operation or maintenance is completed.
3. Avoid unnecessary contact with the circuit board to prevent damage to it or other static-sensitive components caused by contact or improper operation.
4. Fire inspections must be conducted regularly on the energy storage system, no less than once per month.

5. During live inspections, pay attention to hazardous warning signs on the equipment and avoid standing near the cabinet door.

DANGER

During maintenance, all products must be powered off and maintained strictly in accordance with the relevant requirements of this manual.

1.5 Electrical Safety

1.5.1 Grounding Requirements

1. Equipment grounding impedance should meet local electrical standards.
2. When you install the product, install the protective ground wire first. When you disassemble it, remove the protective ground wire in the last step.
3. The system should be permanently grounded. Before you operate on the system, you must check the electrical connections of the system to ensure that it is reliably grounded.
4. It is prohibited to operate the equipment without installing the grounding conductor.
5. Do not damage the grounding conductor.

CAUTION

It is strictly prohibited to install the system before grounding.

1.5.2 Cabling Requirements

1. Cable selection, erection, and routing must comply with local laws, regulations, and specifications.
2. During power cable laying, loops and twists are strictly prohibited. If the cable length is insufficient, replace the cable. Making joints or solder points within the power cable is strictly prohibited.
3. All cables must be securely connected, well insulated, and of appropriate specification.
4. Cable trays and cable entry holes must have no sharp edges. Cable entry points through conduits or holes must be protected to prevent cables from being damaged by sharp edges or burrs.

5. Cables used in high-temperature environments may be subject to insulation layer aging and damage. Ensure that the distance between the cable and any surrounding heating devices or heat source areas is at least 30 mm.
6. Similar cables should be bundled together, while different types of cables must be laid at least 30 mm apart. Wrapping or crossing cables is prohibited.
7. All cables used in the product must be securely connected, properly insulated, and meet the applicable specifications.
8. Buried cables need to be reliably fixed using cable supports and cable clamps. Cables in backfilled soil areas must fit tightly to the ground to prevent deformation or damage due to force during backfilling.
9. At very low temperatures, severe impact or vibration may cause the plastic sheath of cables to become brittle and crack. To ensure construction safety, the following requirements must be met:
   - All cables should be laid and installed at temperatures above 0°C. Handle cables gently during transportation, especially during construction in low-temperature environments.
   - If the storage environment temperature of cables is below 0°C, they must be moved to room temperature storage for more than 24 hours before laying.

CAUTION

The system's operating temperature range is -20°C to 50°C.

1.6 Mechanical Safety

1.6.1 Transportation Safety

1. When moving large products with transport packaging intact, use a forklift to lift the cabinet from the bottom before moving.
2. When using a forklift for handling, the forks must be positioned centrally to prevent tipping. Secure the equipment to the forklift with ropes before moving; have a dedicated person supervise during movement.

3. The cabinet tilt angle must comply with the diagram requirements: with packaging, tilt angle α ≤ 15°; after removing packaging, tilt angle α ≤ 10°.

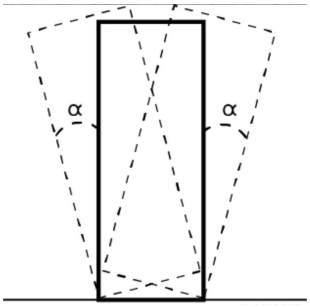

1.6.2 Hoisting Safety

1. Personnel performing hoisting operations must undergo relevant training and be qualified before starting work.
2. The foundation for hoisting operations must meet the load-bearing requirements for crane operation.
3. The hoisting area must be isolated with temporary warning signs or fences.
4. During hoisting, walking under the boom or hoisted object is strictly prohibited.
5. During hoisting, dragging wire ropes or slings is prohibited, and striking with hard objects is prohibited.
6. During hoisting, ensure the angle between the two slings is no greater than 90°, as shown below.

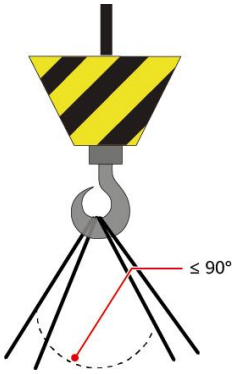

7. Crane hoisting must ensure the hoisting hook center point is perpendicular to the outdoor cabinet.
8. The cabinet tilt angle during hoisting should be less than 5°.
9. Hoisting acceleration ≤ 0.5g, and hoisting should be performed at constant speed.

10. The angle between the hoisting rope and the cabinet top ≥ 60°.

1.6.3 Working at Heights Safety

1. When electrical work at heights is possible, use wooden ladders or insulated ladders.
2. Prioritize using platform ladders with guardrails for work at heights; step ladders are prohibited.
3. Before using a ladder, confirm it is intact, its load capacity meets requirements, and overloading is strictly prohibited.
4. The ladder must be placed on a stable surface and must be held by someone during operation.
5. When climbing the ladder, keep your body steady and ensure your center of gravity does not deviate from the edge of the ladder frame to reduce danger and ensure safety.
6. When using an A-frame ladder, the spreader rope must be secure.

1.6.4 Aerial Safety

1. Operations performed more than 2 meters above the ground are considered aerial work and require a supervisor.
2. Relevant training and certification are required before performing aerial work.
3. At aerial work sites, dangerous restricted areas should be marked with clear signs, and unauthorized personnel are strictly prohibited from entering.

1.7 Environmental Requirements

1.7.1 General Requirements

1. It is strictly prohibited to place equipment in flammable, explosive gas, or smoke environments. Any operation in such environments is prohibited.
2. It is strictly prohibited to store flammable or explosive items in the equipment area.
3. It is strictly prohibited to place equipment near heat sources or ignition sources, such as fireworks, candles, heaters, or other heating devices. Equipment overheating may cause damage or fire.

4. Equipment should be installed away from liquids. Installation directly under water pipes, air outlets, or other locations prone to condensation is strictly prohibited. Installation directly under air conditioning outlets, vents, or room outlet windows prone to leakage is strictly prohibited to prevent liquid ingress causing equipment failure or short circuits.
5. During equipment operation, do not block ventilation openings, heat dissipation systems, or cover them with other items to prevent damage from high temperatures or fire.
6. The storage temperature and humidity environment for equipment should be suitable. Store in a clean, dry, well-ventilated area, and protect from dust and condensation.
7. Installation, use, and operation of outdoor equipment and cables (including but not limited to moving equipment, operating equipment and cables, plugging/unplugging outdoor signal interfaces, aerial work, outdoor installation, opening doors, etc.) are strictly prohibited during severe weather such as thunderstorms, rain, snow, or winds above level 6.

1.7.2 Site Selection Requirements

1. Installation environment requirements are shown in the table below:

Environmental parameters				Installation environmental conditions	Environmental conditions for transportation and storage		Remarks
Project		Parameter	Unit		Storage	Transport	
Climatic conditions	Temperature	Low temperature	℃	-10	0	-20	
		High temperature	℃	+50	+35	+45	
	Pressu	Low pressure	kPa	79.5	/		

	re	High pressure	kPa	106	/		
	Humidity	Low relative humidity	%	0	0	0	When the temperature is below 20 ℃
		High relative humidity	%	90	80	90	
		Condensation	Yes/No	/	/		Within the relative humidity range of 0~90%, there is no condensation generated inside the product.
	Altitude	Low altitude	m	0	0	0	When the altitude exceeds 3000m and exceeds the maximum limit, it shall be used in accordance with the provisions of 5.11.2 in GB/T3859.2-1993.
		High altitude	m	3000	3000	3000	
Remarks	For the installation environment conditions of the system, the system performance will be affected when the temperature is below 0 ° C and above 40 ° C To the limit.						

2. The installation horizontal plane should be higher than the historical highest water level in the area and at least 300mm above the level ground. Installation locations must not be in low-lying areas.
3. Energy storage systems or power stations must be placed in environments free from combustion and explosion risks.
4. Choose a well-ventilated location.

Site selection should avoid scenarios not recommended by industry standards and regulations, including but not limited to the following areas, regions, and locations:

1. Areas with strong vibration, strong noise sources, and strong electromagnetic field interference.
2. Places that produce or contain dust, oil smoke, harmful gases, corrosive gases, etc.

3. Places that produce or store corrosive, flammable, or explosive items.
4. Ground with poor geological conditions such as elastic soil or weak soil layers, prone to water accumulation or subsidence.
5. Below reservoirs, water features, or water intake rooms.

NOTE

- If unavoidable in locations prone to water accumulation, install water barriers, drainage facilities, or raise the ground level.
- Cable trenches should not be used as drainage paths. All cable entry openings (e.g., holes where cables pass through walls or floors) must be fire-stopped.

6. Seismic fault zones and seismic zones with fortification intensity above degree IX.
7. Areas directly endangered by mudslides, landslides, quicksand, karst caves, etc.
8. Within the boundaries of mining subsidence (displacement) zones.
9. Within blasting hazard zones.
10. Areas that may be submerged after dam or dike breaches.
11. Important drinking water source sanitation protection zones.
12. Historical and cultural relic protection zones.
13. Crowded places, high-rise buildings, underground buildings.
14. Urban arterial road intersections and busy traffic sections.
15. Indoor installation of energy storage cabinets is prohibited. General requirements for outdoor energy storage system site selection are as follows:
    - Within the installation site of the energy storage system or power station and 3m surrounding it, there should be no combustibles to prevent fire spread hazards. (Exemption: Single specimens of trees, shrubs, or cultivated groundcover that do not easily contribute to fire spread, such as green grass, ivy, succulents, or similar plants used as groundcover, should be exempt.)

- It is not recommended to add coverings above the energy storage system. If coverings must be added in special scenarios, the following conditions must be met:
  - The distance between the covering and the top of the energy storage should be greater than 3m.
  - The covering must be non-combustible.

  Simultaneously, in extreme situations, there is a risk of damage to the covering; our company does not assume responsibility for damage to coverings.
- The safety distance between the energy storage system and buildings must comply with local fire regulations or standards.
- Energy storage systems installed in salt damage or polluted areas will be corroded. Do not install energy storage systems in salt damage or polluted areas. Energy storage systems can be used in the following or better environments:
  - Outdoor environments more than 3000m from the coast; use within 2000m of the coast is not recommended (consult the distributor or our engineers if needed).
  - More than 3000m from heavy pollution sources like smelting plants, coal mines, thermal power plants.
  - More than 2000m from moderate pollution sources like chemical plants, rubber plants, electroplating plants.
  - More than 1000m from light pollution sources like food processing, leather tanning, heating boilers, slaughterhouses, centralized garbage dumps, sewage treatment stations.

NOTE

If the site selection does not meet local regulatory requirements, it is recommended to re-select the location.

1.7.3 Foundation Requirements

1. The energy storage system must be installed on concrete or other non-combustible surfaces. Ensure the installation surface is level, solid, flat, and has sufficient load-bearing capacity. Depressions or tilting are prohibited.
2. The equipment foundation should be configured according to the total weight of the equipment. If the foundation's load-bearing capacity is insufficient, re-evaluation is required.
3. After excavation, the equipment foundation must not be soaked or disturbed by water. If soaked or disturbed, continue excavation and replace the fill material.
4. The bottom of the foundation pit must be compacted and leveled.
5. The levelness error of the contact surface between the equipment foundation and the cabinet should be ≤ 3mm.
6. The foundation must be higher than the local historical highest water level and at least 300mm above the level ground.
7. Build drainage facilities according to local geology and municipal drainage requirements to ensure no water accumulation at the equipment foundation. Foundation construction should meet the drainage requirements for the local historical maximum rainfall. Discharged water must be treated according to local regulations.
8. When building the equipment foundation, consider the cable outlet for the energy storage system and reserve cable trenches or entry holes.
9. Reserved holes in the foundation and cable entry holes at the bottom of the equipment must be sealed.

2. Product Introduction

2.1 Product Features

The Lithium Iron Phosphate (LFP) batteries produced by AlphaESS feature long life and high reliability, meeting the application needs of various energy storage systems.

The system is designed with a highly modular structure, making it easy to assemble, transport, and maintain.

The system uses real-time balancing technology to ensure high consistency between battery modules.

The system is designed with a detachable structure, compact and flexible, facilitating installation and testing, and meeting application requirements in different working environments and types.

The system features advanced thermal management technology, allowing it to operate within the optimal temperature environment.

The system has local and remote monitoring and control functions.

Through communication between the BMS, PCS, EMS, and monitoring system, the system enables flexible dispatch of the power system.

2.2 Product Composition

2.2.1 Appearance Introduction

The appearance of the STORION-LC-TB125 energy storage system is shown below:



NOTE

***The above images are for reference only. Please refer to the actual received product!**

Product appearance description is shown in the table below:

View	Description
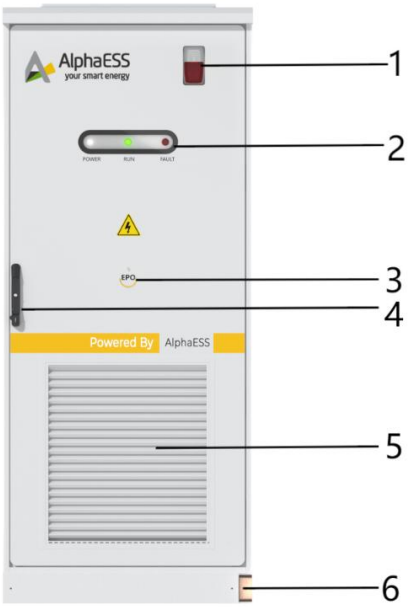	Front View 1.Audible and Visual Alarm 2.Indicator Lights 3.Emergency Stop Button 4.Door Lock 5.Air Intake Louver 6.Grounding Point

NOTE

***The above image is for reference only. For more information, refer to the actual product received.**

2.2.2 Indicator Light Function Description

Three indicator lights showing the main operating status of the system are installed on the upper part of the cabinet door: "POWER" (power), "RUN" (running), and "FAULT".

The indicator description is shown in the table below:

Name	Color	Description
POWER	White	Always on when the system is powered on, and always off when the system is powered off.
RUN	Green	Always on when the system is running normally with power output; flashes slowly when the system is running off-grid; and always off when the system is in standby mode or powered off.
FAULT	Red	Always on when a fault occurs during system operation, and always off during normal operation.

The status and descriptions of the LED indicator lights are listed in the following table.

Name	Description
POWER on, RUN on, FAULT off	The system is running normally.
POWER on, RUN on, FAULT constantly on	The constant illumination of the FAULT indicator during system operation indicates a system malfunction.
POWER on, RUN off, FAULT off	The system is in standby mode.

2.2.3 Outdoor Cabinet Dimensions

The expansion cabinet and system cabinet are shown below:

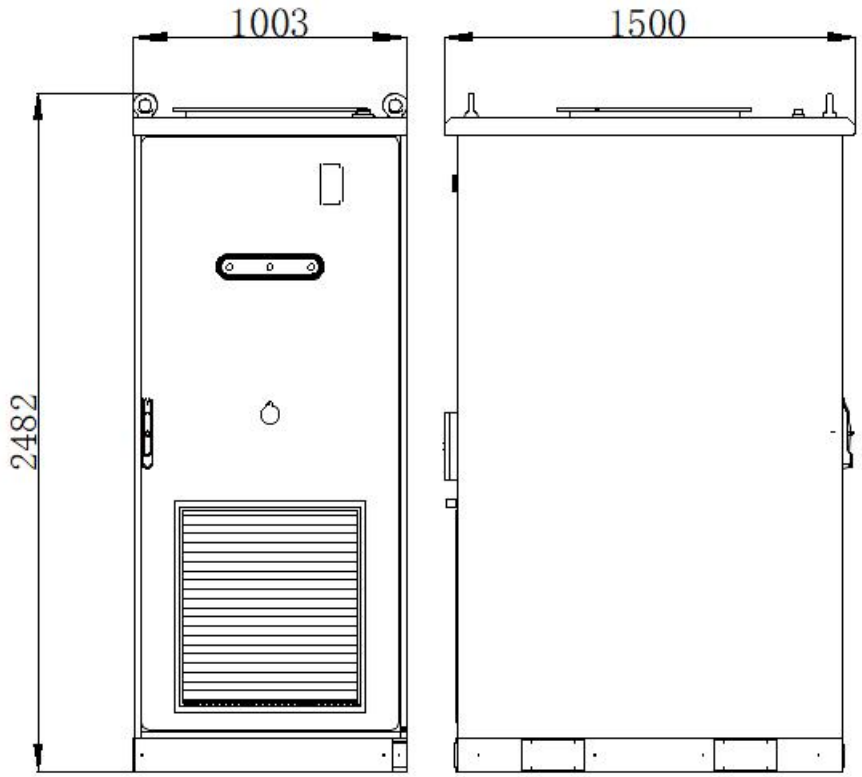

Front View **Left View**

Cabinet dimensions are shown in the table below:

Machine Type	STORION-LC-TB125
W（mm）	1003
H（mm）	2482
D（mm）	1500

2.2.4 Outdoor Cabinet Internal Design

The system adopts an all-in-one design, integrating the PCS module, energy storage battery system, liquid cooling system, etc., into one system, all installed within the same cabinet.

View	Description

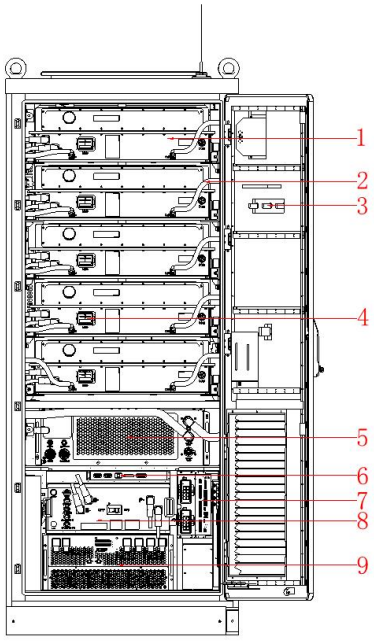	Front View 1. Battery 2. Liquid Cooling Pipes 3. Indicator Lights 4. MSD 5. Liquid Cooling Unit 6. BAMS 7. EMS 8. HV-BOX 9. PCS
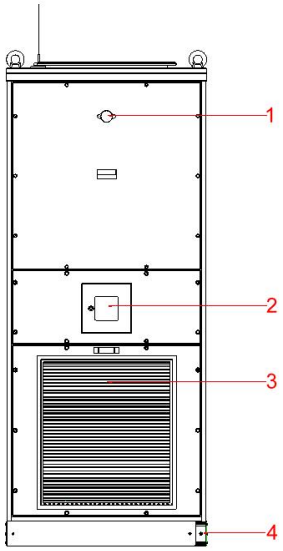	Rear View 1. Pressure Relief Valve 2.Water Firefighting Interface 3. Louver 4. Grounding Point

2.2.5 Equipment Operation Switch Location Overview

The STORION-LC-TB125 system includes the HV-BOX Auxiliary Power Switch, HV-BOX Molded Case Switch, Cabinet Auxiliary Power Switch, and AC Molded Case Switch. The locations of these switches in the system are shown below:

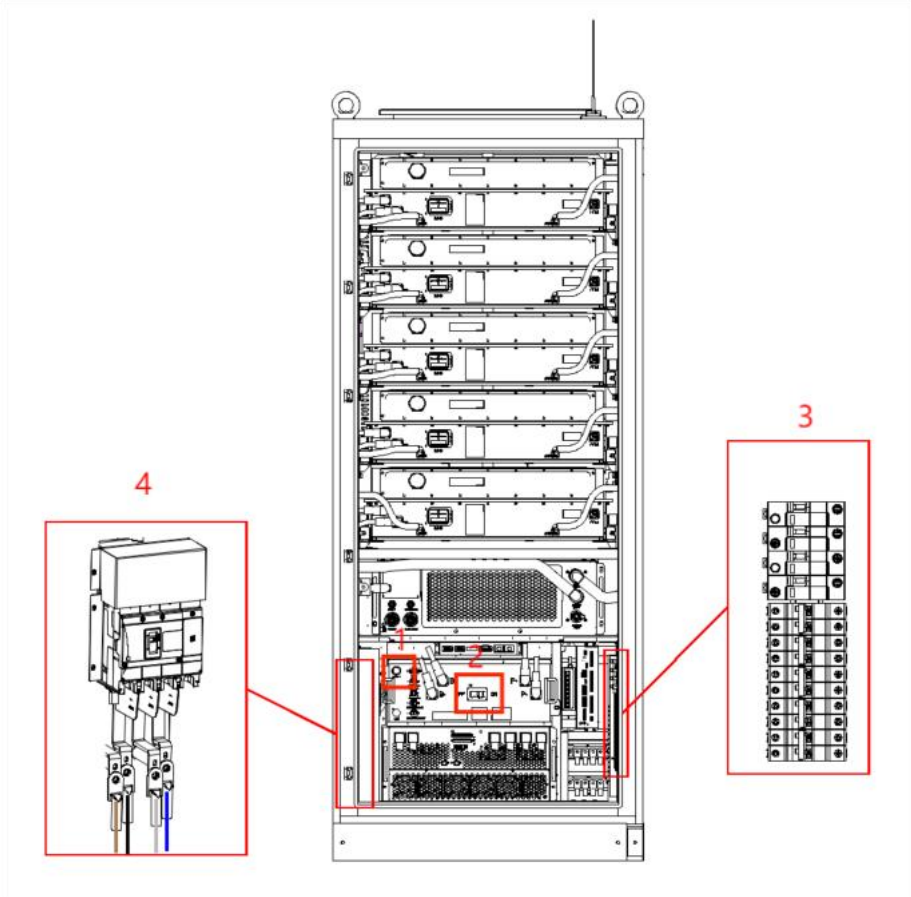

The functions of these switches in the system are described in the table below:

Number	Equipment Switch	Description
1	HV-BOX Aux Power Switch.	Controls AC power supply to the battery
2	HV-BOX MCCB	Controls DC power supply to the battery system
3	System Cab Aux Power Switch.	Controls auxiliary power to the system
4	System AC MCCB	Controls system connection to grid power

2.2.6 Cable Entry

For convenient on-site cable connections, all cables between internal devices in the system cabinet are pre-connected before delivery. Communication cables connecting the system cabinet to external devices can enter through the cable entry located at the bottom right of the system cabinet. The system cable entry diagram is shown below:

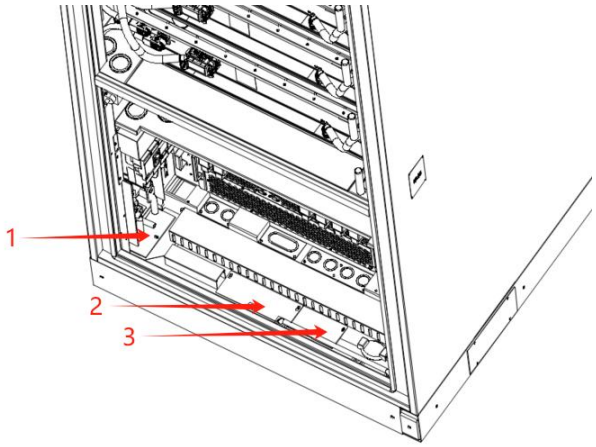

Dimension requirements are shown in the table below:

Number	Description	Dimensions
1	System cabinet power cable entry port	54.5 x 144.8 mm
2	PCS communication cable entry port (Parallel port)	69 x 195 mm
3	EMS communication cable and expansion cabinet power cable entry holes	Φ50mm x 2

3. Product Components Introduction

3. 1 M166314-52S-EX

The battery diagram is shown below:

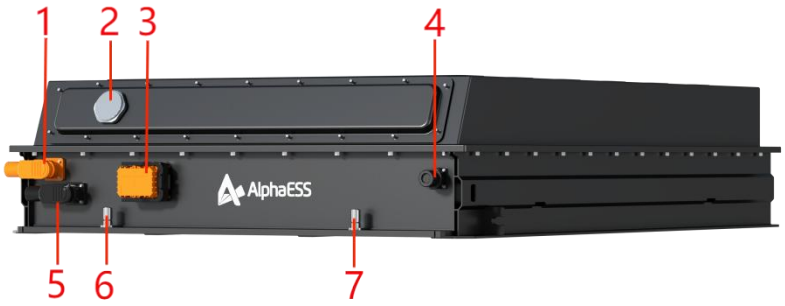

Appearance introduction is shown in the table below:

Number	Description	Number	Description
1	Battery Positive (+)	5	Battery Negative (-)
2	Pressure Relief Valve	6	Liquid Cooling Inlet
3	MSD	7	Liquid Cooling Outlet
4	Communication Port		

Battery technical parameters are shown in the table below:

Number	Description	Technical Parameter	Remarks
1	Model	M166314-52S-EX	
2	Cell Grouping Configuration	1P52S	

3	Rated Voltage (V)	166.4V	
4	Operating Voltage Range (V)	140.4 ~ 187.2	
5	Rated Capacity (Ah)	314	Max. Charge/Discharge 0.5C
6	Rated Energy (kWh)	52.249	
7	Operating Power Consumption (W)	< 2	
8	Standby Power Consumption (mW)	< 100	Battery in standby state
9	Max. Charge/Discharge Current (A)	157	Constant Current Mode
10	DC Internal Resistance (mΩ)	< 10	Factory Default
11	Transport Temperature (°C)	-20°C ~ 45°C	
12	Operating Temperature Range (°C)	15°C ~ 35°C	
13	Communication Mode	CAN	
14	Weight (kg)	333	
15	Permissible Operating Humidity	15% ~ 95%	

3.2 HV-Box

The HV-Box diagram is shown below:

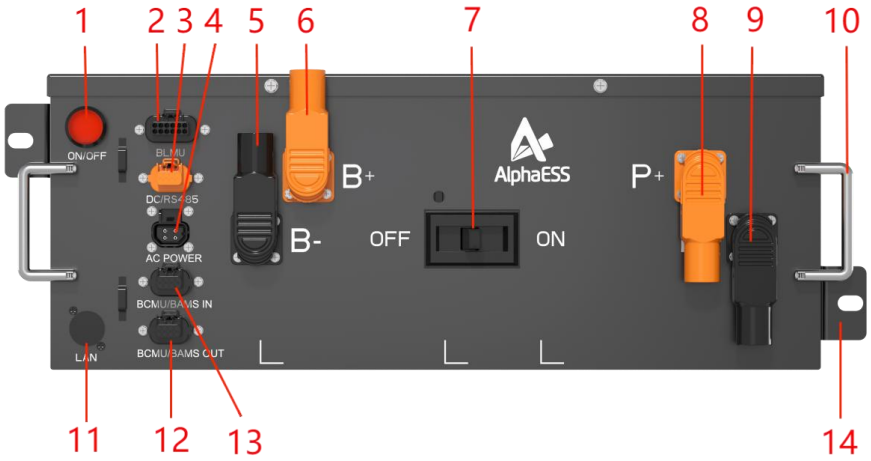

HV-BOX appearance introduction is shown in the table below:

Number	Description	Number	Description
1	Auxiliary Power Switch	8	Positive Output (+)
2	BLMU Communication Port	9	Negative Output (-)
3	DC Power / RS485 Port	10	Handle
4	AC Power Port	11	Communication Ethernet Port
5	Negative Input (-)	12	BCMU Communication Port
6	Positive Input (+)	13	BCMU Communication Port
7	Molded Case Circuit Breaker (MCCB)	14	Mounting Brackets

HV-BOX technical parameters are shown in the table below:

Number	Technical Parameter	Technical Specification
1	Model	HV1500250
2	Operating Voltage Range (V)	Max. 1500
4	Rated Current (A)	Max. 250
5	Cabinet Material	Galvanized Steel Plate

6	Dimensions (L×W×H, mm)	526×670×250 (±2)
7	Weight (kg)	≤30
8	Cooling Method	Air Cooling
9	Storage Temperature (°C)	-20 ~ +70
10	Operating Temperature Range (°C)	-20 ~ +50
11	Recommended Operating Temp (°C)	23±5
12	Operating Humidity Range	≤85%RH (No condensation)

3. 3 ALPEMS500 Interface Definition

The ALPEMS500 is shown below:



Interface definitions are shown in the table below:

Number	Interface Name	Interface Definition	Remarks
1	DI1	ATS Main Circuit Signal	Remote Signal (External NO)
2	DI2	ATS Backup Circuit Signal	Remote Signal (External NO)
3	DI3	RRCR1	Remote Signal (External NO)
4	DI4	RRCR2	Remote Signal (External NO)
5	DI5	RRCR3	Remote Signal (External NO)
6	DI6	RRCR4	Remote Signal (External NO)
7	DI7	Limit Charge Power	Remote Signal (External NO)
8	DI8	Unlimited Charge Power	Remote Signal (External NO)

9	DI9	External E-Stop Signal	Remote Signal (External NO)
10	DO1	Generator Start/Stop	NO Contact
11	DO2	Shed General Load	NO Contact
12	DO3	Shed Critical Load	NO Contact
13	LAN1	PCS Communication, BMS Communication	
14	LAN2	Third-party Host Computer	
15	LAN3	Reserved	Dynamic IP
17	LAN4	Wired Public Network to Cloud	Dynamic IP
18	RS485-1	Grid, Generator Meter	
19	RS485-2	PV Meter	
20	RS485-3	/	
21	RS485-4	PV Inverter	

ALPEMS500 technical parameters are shown in the table below:

Number	Description	Technical Parameter
1	Rated Input Voltage (V)	DC 24
2	Control Board Max. Power (W)	5
3	Interface Board Max. Power (W)	5
4	Cabinet Dimensions (W×H×D) (mm)	262.4×69.2×158.2
5	Isolated 485 Communication	8 Channels
6	Isolated CAN Communication	2 Channels
7	Ethernet Interfaces	4 (1,2: 100M; 3,4: 1G)
8	DEBUG	USB (Debug Interface)

9	SIM Card Socket	For SIM card with 4G module
10	TF Card Socket	For firmware burning and upgrade
11	HDMI	1

3.4 PCS

The Energy Storage Inverter INPPCS-125/0.4-W-14-A2-OS appearance is shown below:

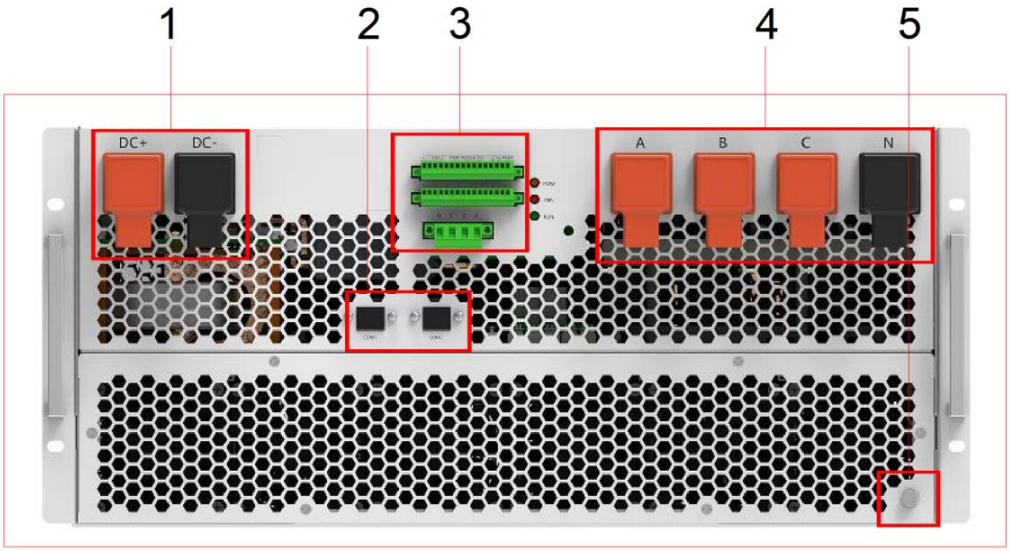

Appearance introduction is shown in the table below:

Number	Name	Description
1	DC Terminal Block	Connection for battery power interface
2	Communication Ports	COM1 for debugging, COM2 for EMS communication
3	Communication Interface	Dry Contacts, CAN/485 Communication
4	AC Terminal Block	Connection for grid power
5	Grounding Point	Connection for grounding cable

Inverter technical parameters are shown in the table below:

Number	Description	Product Model

DC Side Parameters		
1	Voltage Range (V)	DC600～1000
2	Max. Charge/Discharge Current (A)	198
3	Rated DC Power (kW)	125
Grid Side Parameters		
4	Rated AC Power (kW)	125
5	Overload Capability	1.1x continuous, 1.2x for 1min
6	Rated AC Voltage (V)	AC400
7	Rated AC Current (A)	180
8	Grid Voltage Range (V)	400 (-15% ~ +15%)
9	Frequency (Hz)	50/60 ±2.5
10	Charge/Discharge Switch Time (ms)	< 100
Other Parameters		
10	Max. Conversion Efficiency	≥99%
11	Dimensions (mm)	W520×H240×D680
12	Weight (KG)	≤65
13	Protection Rating	IP20
14	Operating Altitude (m)	3000 (Derating above 3000m)
15	Operating Temperature Range (°C)	-30 ~ +60 (Derating above +45°C)
16	Relative Humidity	≤95%
17	Noise (dB)	≤75
18	Cooling Method	Forced Air Cooling

4. Installation

4. 1 Installation Location

4. 1. 1 STORION-LC-TB125 Installation Location Requirements

NOTE

It is recommended to install the energy storage outdoor cabinet according to local fire safety distance requirements, such as distance from escape routes, doors, windows, and vents.

When installing STORION-LC-TB125, ensure sufficient space for ventilation, heat dissipation, installation, and maintenance. Specific installation location requirements are shown below:

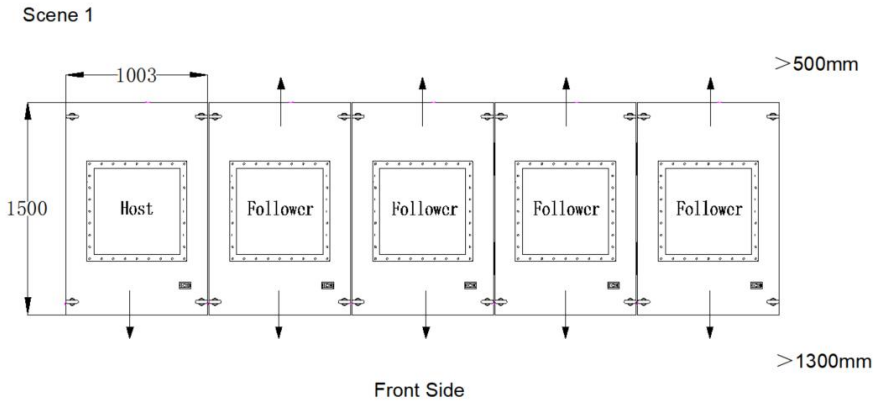

Scenario 1: System Parallel Connection - Supports side-by-side placement. Front/rear layout requirements as shown ensure cabinet front and rear doors can fully open, guaranteeing ventilation, heat dissipation, and sufficient space for operation and maintenance.

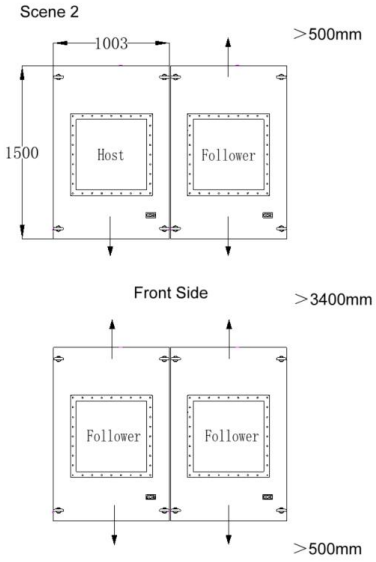

Scenario 2: System Parallel Connection - Supports side-by-side and face-to-face placement. Front/rear layout requirements as shown ensure cabinet front and rear doors can fully open, guaranteeing ventilation, heat dissipation, and sufficient space for operation and maintenance.

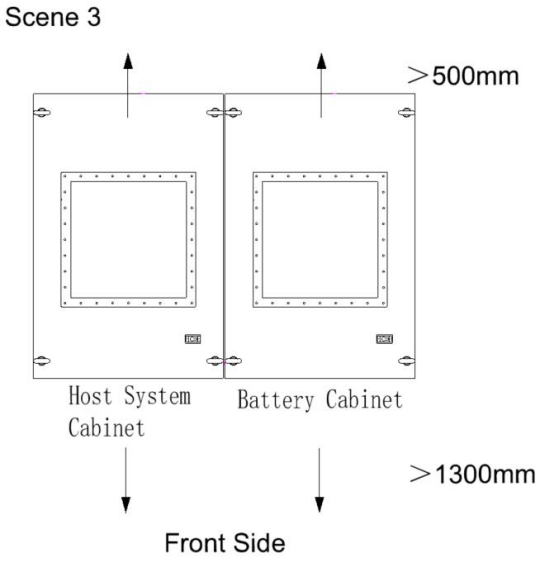

Scenario 3: System DC Expansion Parallel Connection - Supports side-by-side placement. Front/rear layout requirements as shown ensure cabinet front and rear doors can fully open, guaranteeing ventilation, heat dissipation, and sufficient space for operation and maintenance.

4.1.2 STORION-LC-TB125 with ALPSTS-300-O Cabinet Installation Location Requirements

When installing the ALPSTS-300-O STS cabinet, it is recommended to place it immediately to the left of the TB125 system cabinet. The front/rear space reservation should be consistent with the system cabinet requirements, ensuring sufficient space for ventilation, heat dissipation, installation, and maintenance. Specific installation location requirements are shown below:



Scene 4

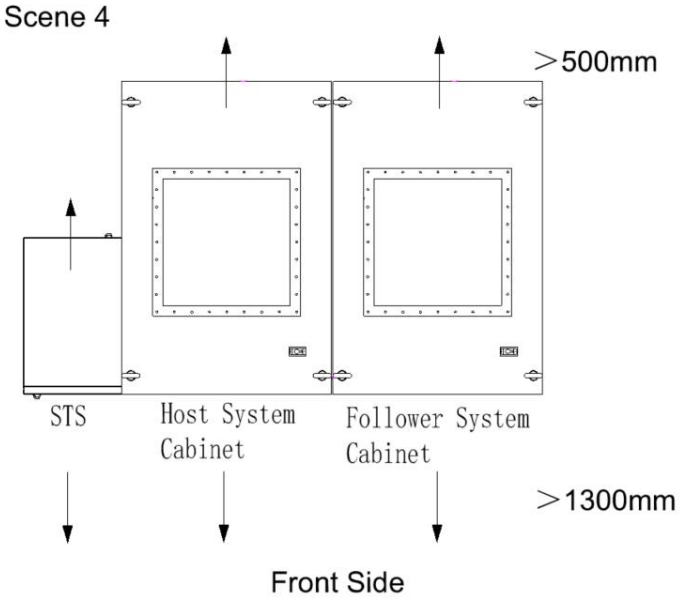

Scenario 4: System On-grid/Off-Grid Parallel Connection - Supports side-by-side placement. STS placed immediately to the left of the system cabinet. Front/rear layout requirements as shown ensure cabinet front and rear doors can fully open, guaranteeing ventilation, heat dissipation, and sufficient space for operation and maintenance.

4. 2 STORION-LC-TB125 Outdoor Cabinet Fixing

NOTE

Before unpacking, check the packaging for obvious signs of damage. If damage is evident, do not unpack, verify the system model, and contact the distributor promptly.

After unpacking, check that all products are intact. If there is obvious external damage, contact the distributor promptly.

4. 2. 1 Parts List

CAUTION

Please check the parts list before product installation. Do not randomly connect power or communication cables. Check the part number before cabling.

The parts list is shown in the table below:

System Accessories		External Cabinet Accessories	
	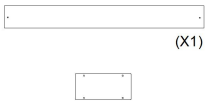	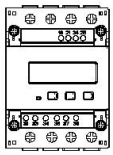	
MSD Qty:5	Cabinet Bottom Cover Plate Qty: 1	30500039 Chint DTSU666 Meter Qty: 1	30300020 Meter CT (80/5A) Qty: 1

4. 2. 2 STORION-LC-TB125 Outdoor Cabinet Installation

4.2.2.1 Transportation Conditions

All equipment for the STORION-LC-TB125 outdoor cabinet is pre-installed and fixed inside the cabinet before leaving the factory (except for the EMS box in follower cabinets). Transporting the outdoor cabinet is sufficient.

4.2.2.2 Forklift Transport

If the installation site is level, a forklift can be used to transport the STORION-LC-TB125 outdoor cabinet. The bottom of the STORION-LC-TB125 outdoor cabinet is equipped with dedicated forklift pockets. Move the STORION-LC-TB125 outdoor cabinet using the front pockets.

CAUTION

If using the forklift transport method, the following requirements must be met:

- The forklift should have sufficient load capacity (at least 5 tons).
- The fork length should be at least 1100mm.
- Movement and placement of the STORION-LC-TB125 outdoor cabinet should be slow and steady.
- Place the STORION-LC-TB125 outdoor cabinet only on level ground without obstacles or bumps. Remove the outer wooden crate before forklift transport.

The forklift transport diagram is shown below:

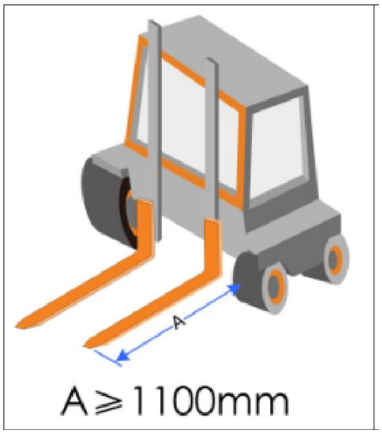

4.2.2.3 Crane Handling

The STORION-LC-TB125 outdoor cabinet also supports crane handling. Lifting eyes are installed on the top of the cabinet. Use the crane to lift the cabinet via the eyes for short-distance handling.

CAUTION

If using the crane handling method, the following requirements must be met:

- The crane should have sufficient load capacity (at least 5 tons).
- Place the STORION-LC-TB125 outdoor cabinet only on level ground without obstacles or bumps. Remove the outer wooden crate before crane handling.
- Crane handling is only suitable for short-distance movement; long-distance transport is not recommended.

The crane handling diagram is shown below:

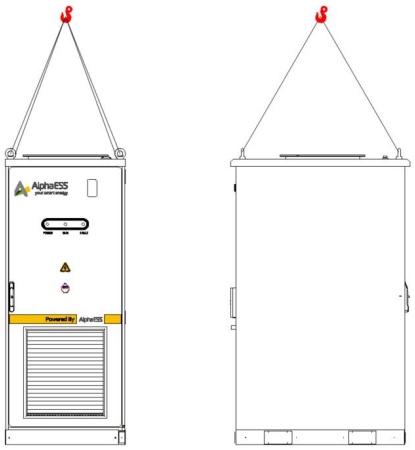

4.2.2.4 STORION-LC-TB125 Equipment Installation

After moving the STORION-LC-TB125 outdoor cabinet to the installation location using a forklift or other tools, fix its base using M12 screws (customer supplied). The base diagram is shown below:

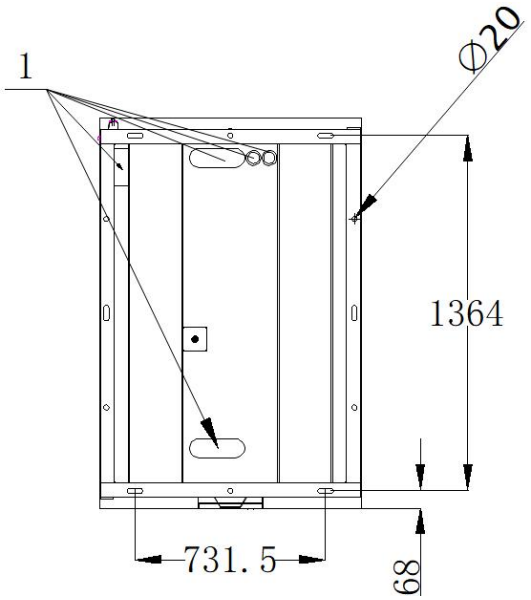

Bottom View

Number	Description
1	System cabinet bottom cable entry

CAUTION

Cable entry holes are located at the bottom of the STORION-LC-TB125 outdoor cabinet. Cables pass through the holes in the base into the cable tray.

When the STORION-LC-TB125 outdoor cabinet needs to be fixed to channel steel, drill Φ14 holes in the channel steel and fix the cabinet to the channel steel with screws. The diagram for fixing to channel steel is shown below:

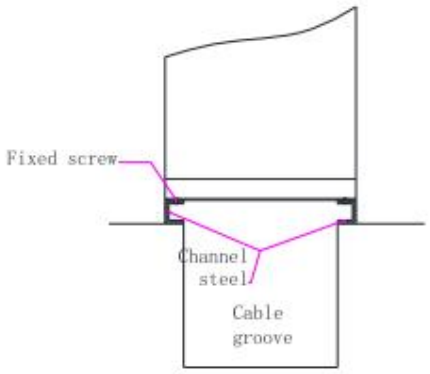

When the STORION-LC-TB125 outdoor cabinet needs to be fixed to a concrete floor, drill holes in the ground and fix the cabinet to the concrete floor with screws. Connect the grounding point at the lower part of the rear door of the STORION-LC-TB125 outdoor cabinet to the site grounding point using the grounding cable, and tighten with bolts after connection. The diagram for fixing to a concrete floor is shown below:

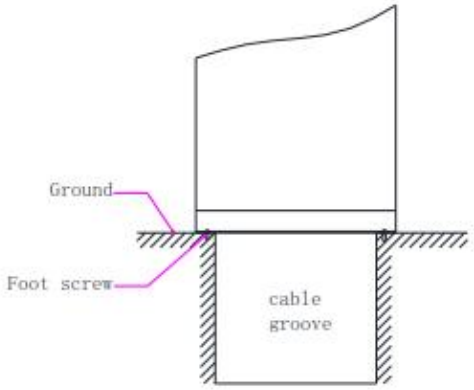

CAUTION

The STORION-LC-TB125 outdoor cabinet itself weighs 2.8 tons. It is recommended to make a foundation using cement or concrete according to local standard requirements for installing the outdoor cabinet.

4.3 Electrical Connection

4.3.1 Safety Precautions

Before performing any electrical connections or other operations on the energy storage integrated system and related equipment, observe the following safety precautions.

- Disconnect all external connections to the energy storage integrated system, as well as connections to internal power supplies.
- Ensure that disconnection points cannot be accidentally re-energized.
- Use a multimeter to ensure the equipment is completely de-energized internally.
- Implement necessary grounding.
- Cover nearby live parts of the operating area with insulating material.

4.3.2 Cabinet Grounding Installation

The system external grounding diagram is shown below. It is recommended to use single-core copper conductor cables with a cross-sectional area of 35 mm² or larger for grounding.

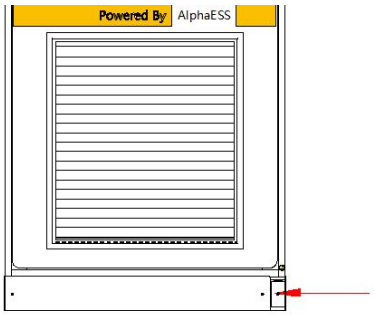

WARNING

Ensure the STORION-LC-TB125 outdoor cabinet is reliably grounded. If not connected or loose, electric shock may occur. It is recommended to paint over the outside of the grounding terminal after installation for protection.

CAUTION

Grounding resistance should be less than 4Ω.

4.3.3 Single Unit On-grid and Meter cabling

CAUTION

Before cabling, open the cable entry holes on the system cabinet. First pass the cables through the entry holes, then connect them to the corresponding points, as shown below.

Front Cable Entry Locations Diagram (System Cabinet)

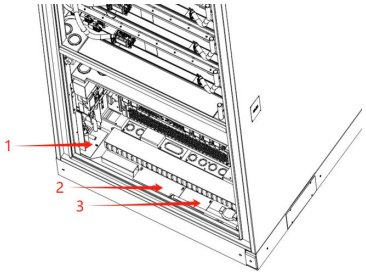

4.3.3.1 AC Grid cabling

1. Ensure correct phase sequence on the AC side.
2. Use a multimeter to measure and ensure cables connected to the busbar have no voltage.
3. Use copper cables of 95mm² or larger (cable diameter not exceeding 54mm) to connect grid phases L1/L2/L3 and Neutral (N) to the cabinet breaker terminals L1/L2/L3 and N respectively.
4. Confirm connections are secure.

The AC grid cabling diagram is shown below(Cables to be provided by the customer):

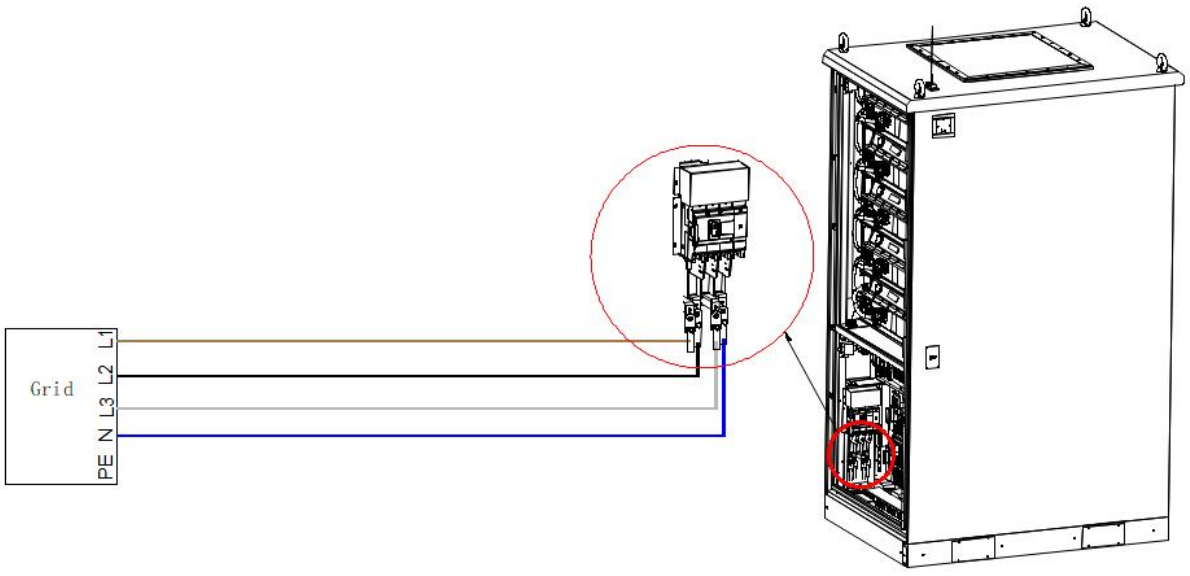

4.3.3.2 Meter cabling

1. Grid phases L1/L2/L3/N connect to meter terminals 1/4/7/10 respectively (providing power and voltage sampling for the meter).

2. Grid L1 phase passes through the meter CT from P1 side to P2 side, then connects to the PCS grid L1 terminal. The CT secondary terminals S1/S2 connect to meter terminals 31/33.
3. Grid L2 phase passes through the meter CT from P1 side to P2 side, then connects to the PCS grid L2 terminal. The CT secondary terminals S1/S2 connect to meter terminals 34/36.
4. Grid L3 phase passes through the meter CT from P1 side to P2 side, then connects to the PCS grid L3 terminal. The CT secondary terminals S1/S2 connect to meter terminals 37/39.

The meter cabling diagram is shown below(Cables to be provided by the customer):

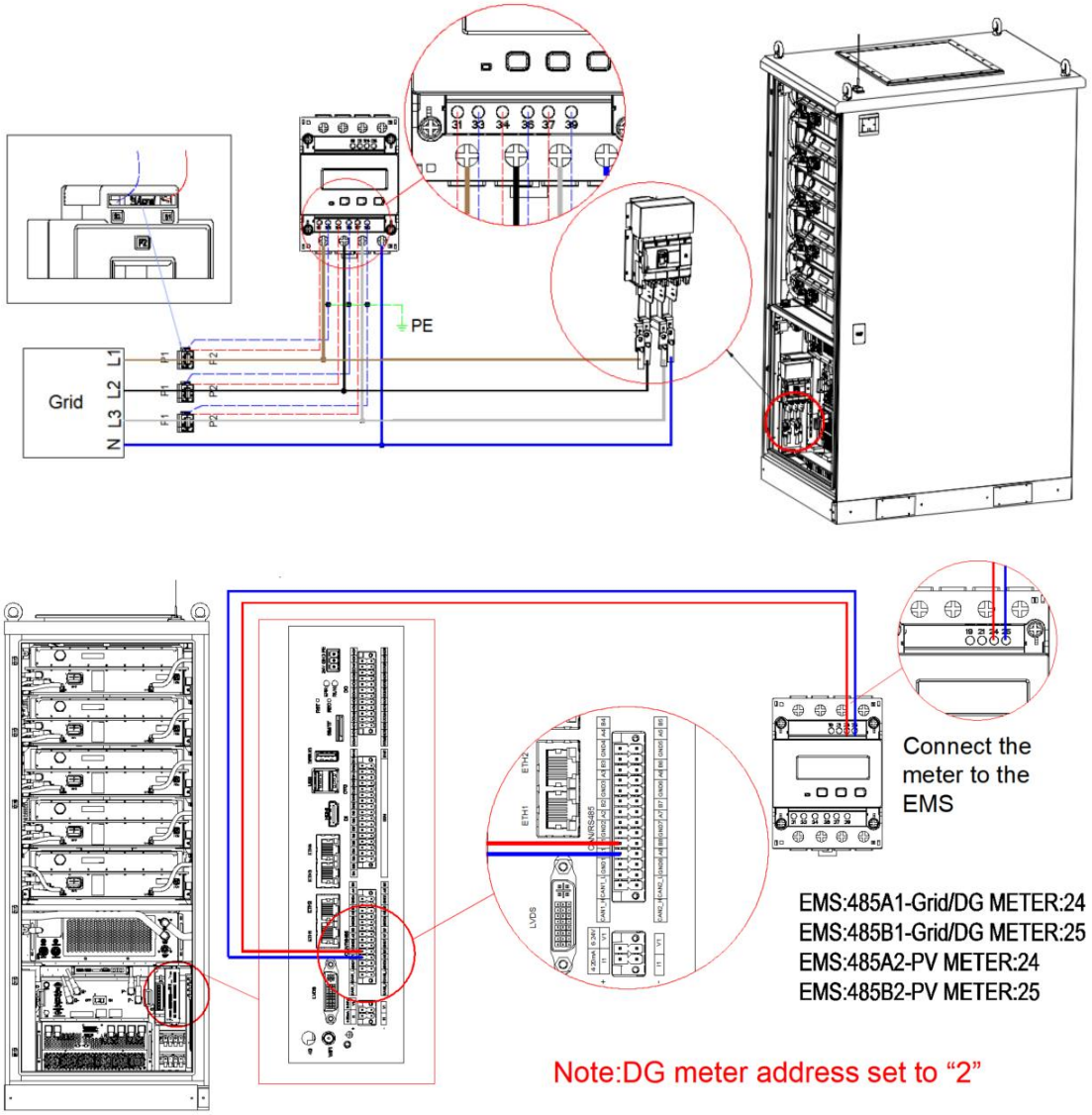

CAUTION

The meter default address is set to "1".

4.3.3.3 Meter cabling Positive Direction Diagram

The meter positive cabling diagram is shown below(Cables to be provided by the customer):

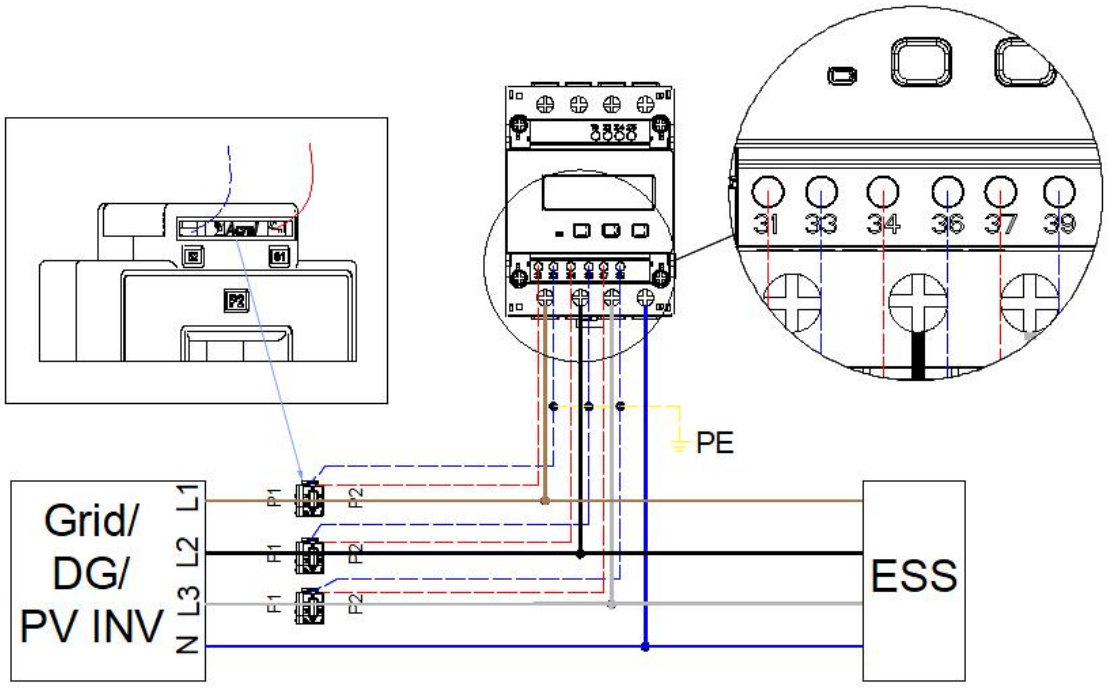

Positive meter data corresponds to the default positive direction shown above. Meters installed in STORION-LC-TB125 include the grid point-of-common-coupling (PCC) meter, PV grid-connection point meter, and generator meter.

4.3.3.4 Meter Settings

To set the meter communication address or baud rate, follow these steps:

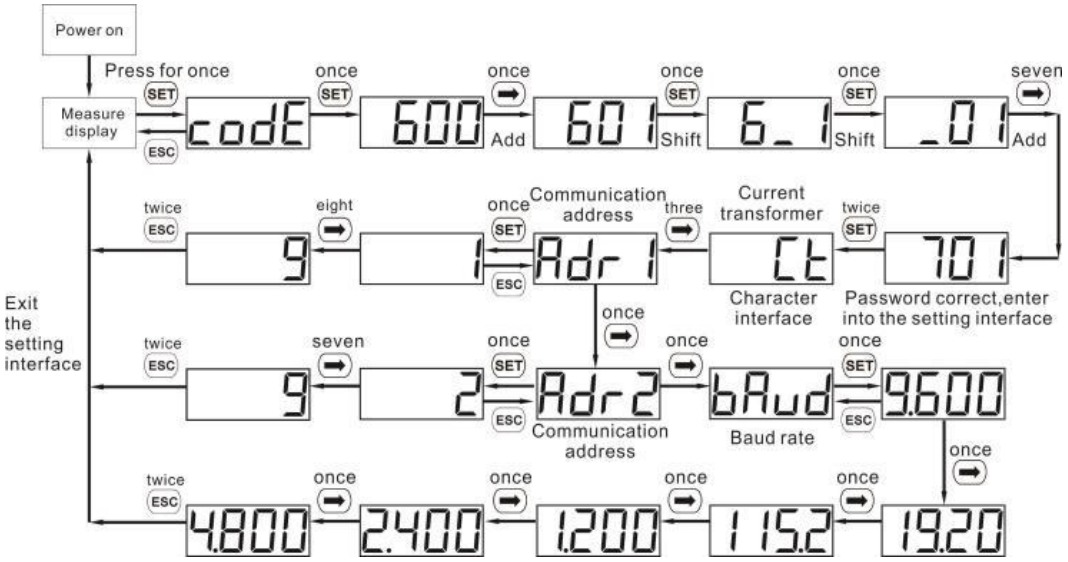

Use these steps to check the baud rate and set the communication address. The corresponding addresses and baud rates for each meter are:

Meter Type	Address Range	Baud Rate
Grid Meter	01	9600
Generator Meter	02	9600
PV Meter	01-05	9600
PV Inverter	01	-

4.3.4 Off-Grid Mode cabling

4.3.4.1 System to STS Cabinet Power Cable Connection

Using the power cables from the harness kit, connect L1/L2/L3/N of the AC MCCB in the system cabinet to A/B/C/N in the STS cabinet respectively.

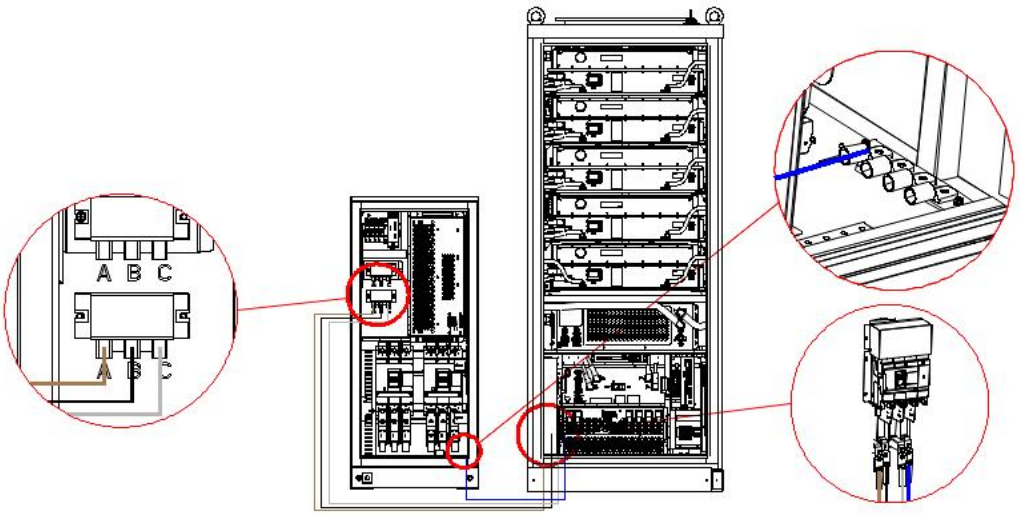

PCS cable routing is as shown below:

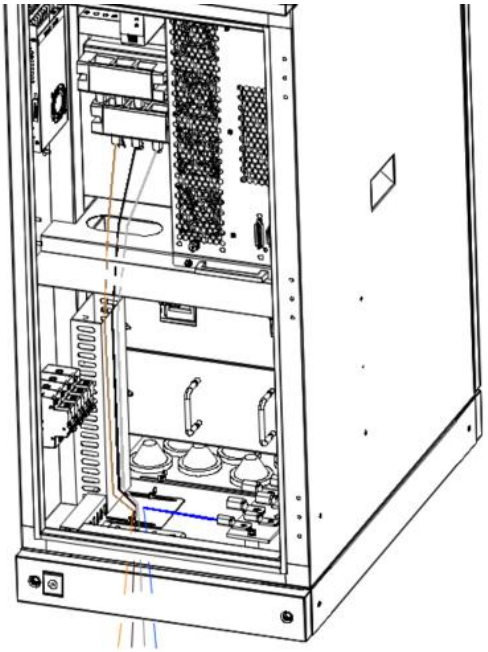

4.3.4.2 System to STS Cabinet Communication Cable Connection

Connect the communication sync cable from inside the STS cabinet to the inside of the system cabinet, according to the table below(Cables in harness kit):

STS Cabinet Terminal	STORION-LC-TB125 Cabinet PCS Terminal
XT1:4B	STS_COM

XT1:14B	STS
XT1:12B	I3_COM
XT1:13B	I3
XT1:7B	A
XT1:8B	B
XT1:9B	C
XT1:10B	N

The connection diagram is shown below:

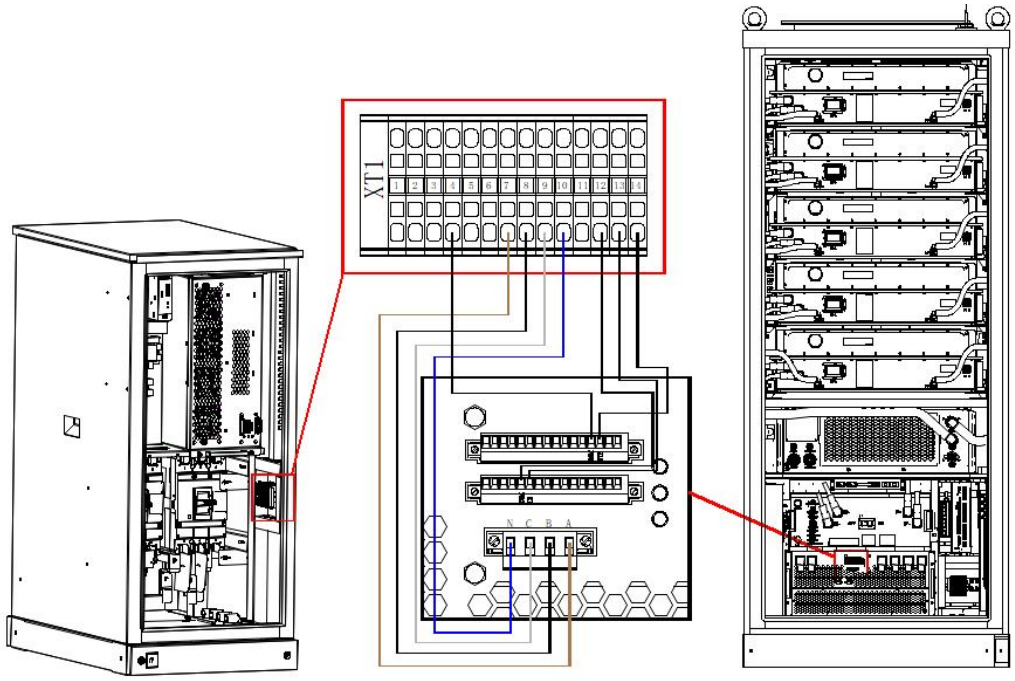

4.3.4.3 Generator Power Cable Connection

Use 2 x 95mm² or 1 x 240mm² single-core copper cables to connect the generator phases L1/L2/L3 and Neutral (N) to the cabinet breaker terminals L1/L2/L3 and N respectively. Install the generator meter as described in sections 4.3.2.2~4.3.2.4 above. The cabling diagram is shown below(Cables to be provided by the customer):

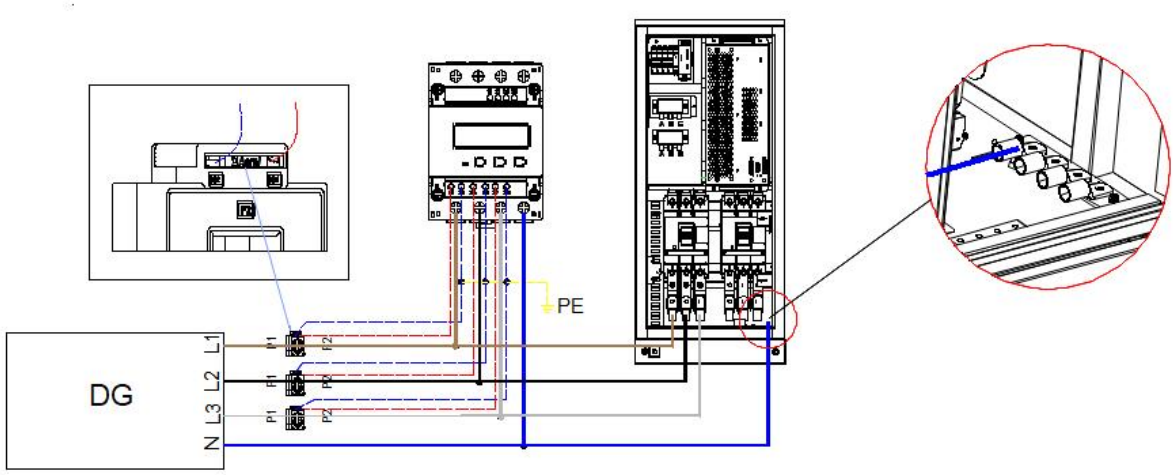

CAUTION

Using 240mm² cable requires raising the STS foundation by 300mm.

4.3.4.4 Generator Dry Contact Connection

For generator dry contact cabling, connect the generator dry contacts (NO/COM) to the ALPEMS500 in the system cabinet (DO:NO1/ DO:COM1). The diagram is shown below(Cables to be provided by the customer):

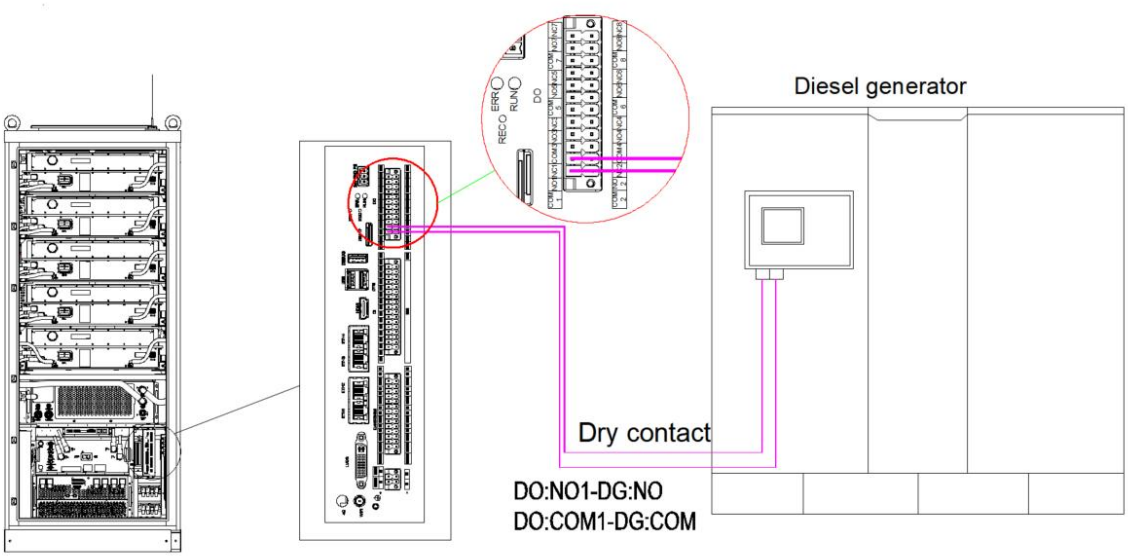

4.3.5 System Parallel Connection cabling

4.3.5.1 On-grid Parallel Grid Side cabling

1. Ensure correct phase sequence on the AC side.

2. Use a multimeter to measure and ensure cables connected to the busbar have no voltage.
3. Connect the L1/L2/L3 and N phases of the Host system cabinet and follower cabinets to the L1/L2/L3 and N phases of the Grid.
4. Confirm connections are secure.

The AC grid cabling diagram is shown below(Cables to be provided by the customer):

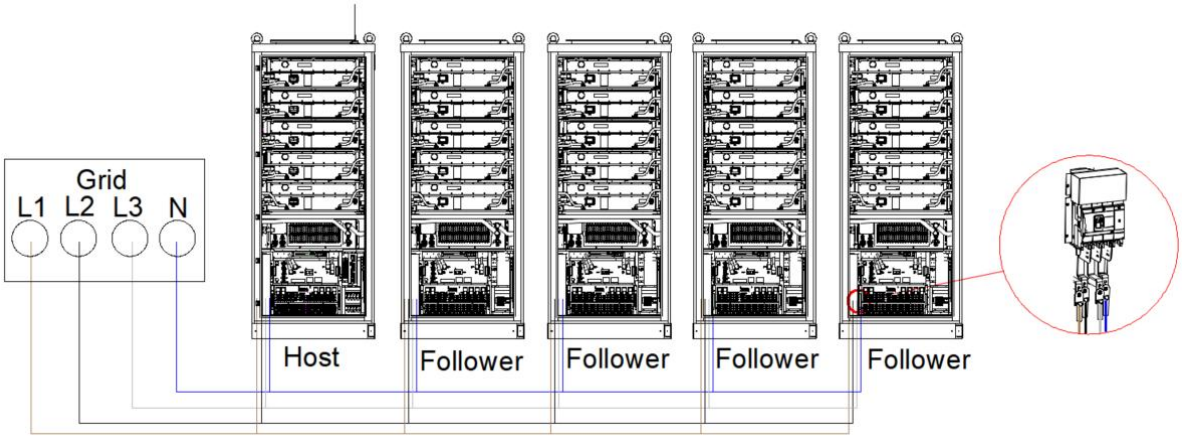

4.3.5.2 On-grid Parallel Communication Cable Connection

Use Ethernet cables (customer supplied) to connect the BAMS and PCS of the follower system cabinets to the switch in the Host cabinet. The diagram is shown below(Cables to be provided by the customer):

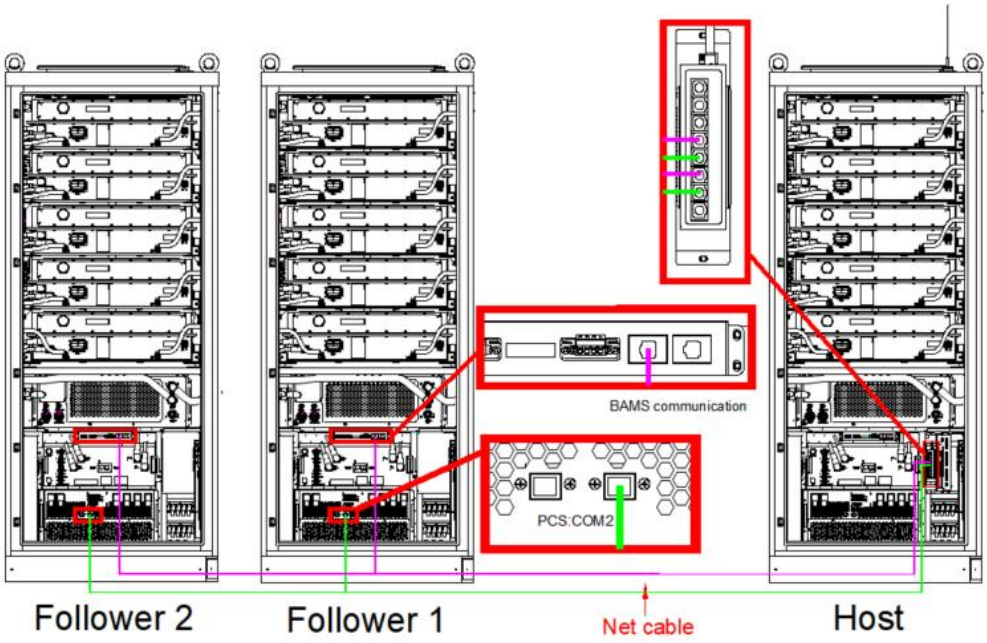

CAUTION

The switch included in the host system cabinet supports 1-3 cabinets in parallel. For more than 3 cabinets, an additional switch must be installed on-site.

4.3.5.3 Switch Installation

When the number of outdoor cabinets for On-grid or off-grid parallel connection exceeds 3, a separate switch needs to be installed inside one of the follower cabinets (determined based on the actual site scenario) to ensure communication between cabinets. The installation location inside the cabinet is shown below:

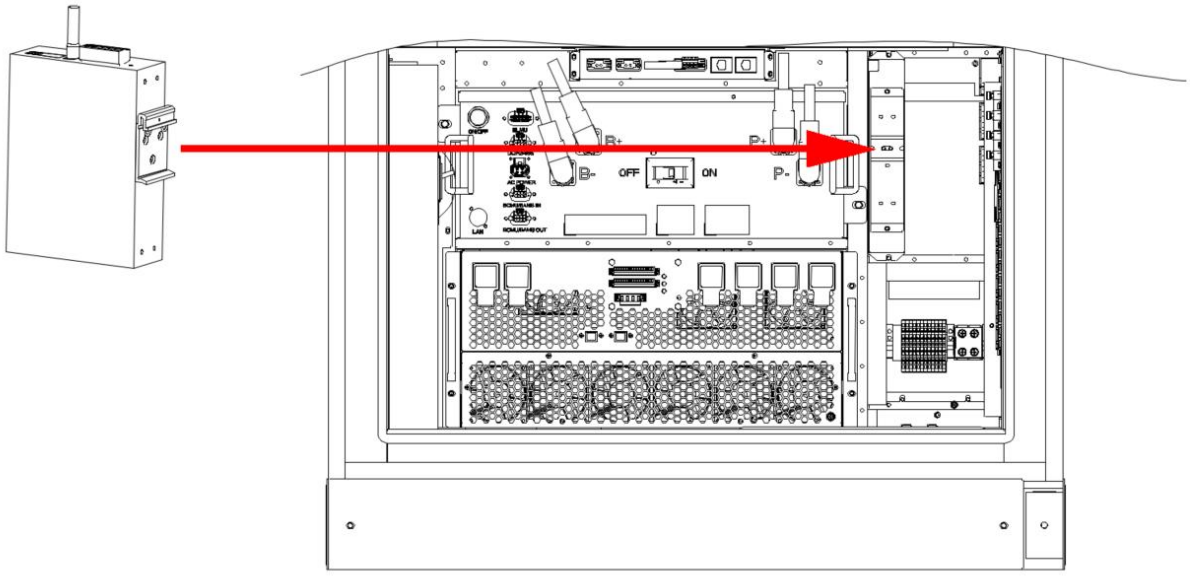

1. Hold the switch, align the hook of the clip with the upper edge of the rail. First, snap the bottom clip of the device into the lower edge of the rail, then gently push the top of the device to snap the upper clip onto the upper edge of the rail (a "click" sound indicates engagement).
2. Connect the pre-wired power cable (pre-wired inside the cable tray) to the switch power port, as shown below:
3. Use Ethernet cables (customer supplied) to connect the BAMS and PCS of the follower system cabinets to the switch in the follower cabinet

4. Interconnect the switch in the follower cabinet to the switch in the host cabinet via Ethernet cabling.

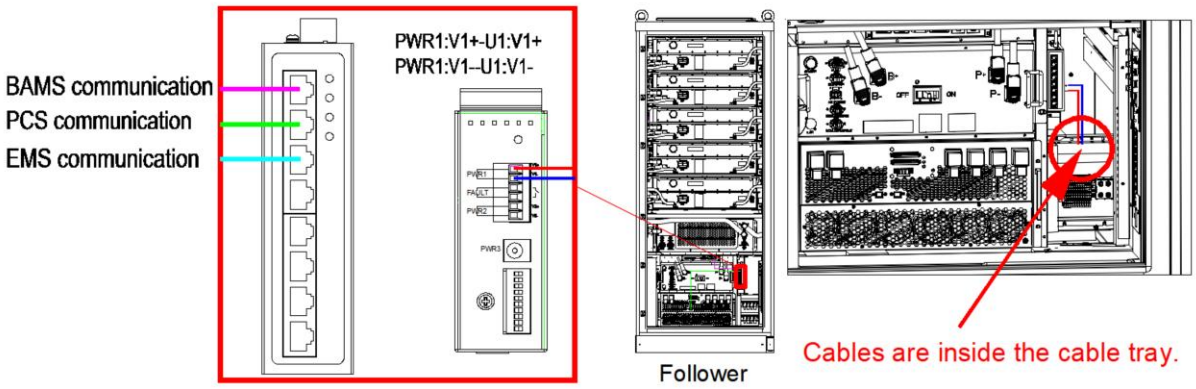

4.3.6 Off-Grid Parallel Connection cabling

CAUTION

Off-grid parallel operation installations must adhere to Scheme 4.2.2.1 Option 4. Pre-engineered harness lengths are strictly non-extendable and solely accommodate this configuration.

4.3.6.1 Off-Grid Parallel System Cabinet Power Cable Connection

1. Ensure correct phase sequence on the AC side.
2. Use a multimeter to measure and ensure cables connected to the busbar have no voltage.
3. Use copper cables of 95mm² or larger to connect the L1/L2/L3 and N phases of the host system cabinet and follower cabinets to the L1/L2/L3 and N phases of the STS cabinet respectively(Cables in harness kit).
4. Confirm connections are secure.

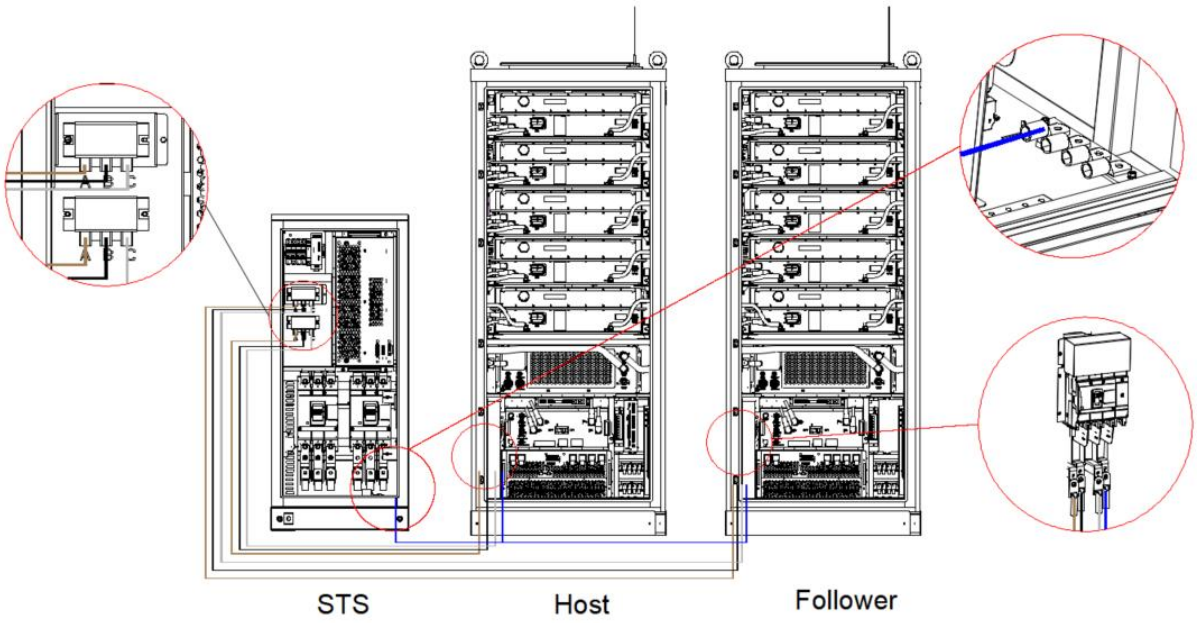

4.3.6.2 System to STS Cabinet Communication Cable Connection

Connect the communication sync cable from inside the STS cabinet to the inside of the system cabinet, according to the table below(Cables in harness kit):

STS Cabinet Terminal	STORION-LC-TB125 Cabinet PCS Terminal
XT1:4B	STS_COM
XT1:14B	STS
XT1:12B	I3_COM
XT1:13B	I3
XT1:7B	A
XT1:8B	B
XT1:9B	C
XT1:10B	N

The connection diagram is shown below:

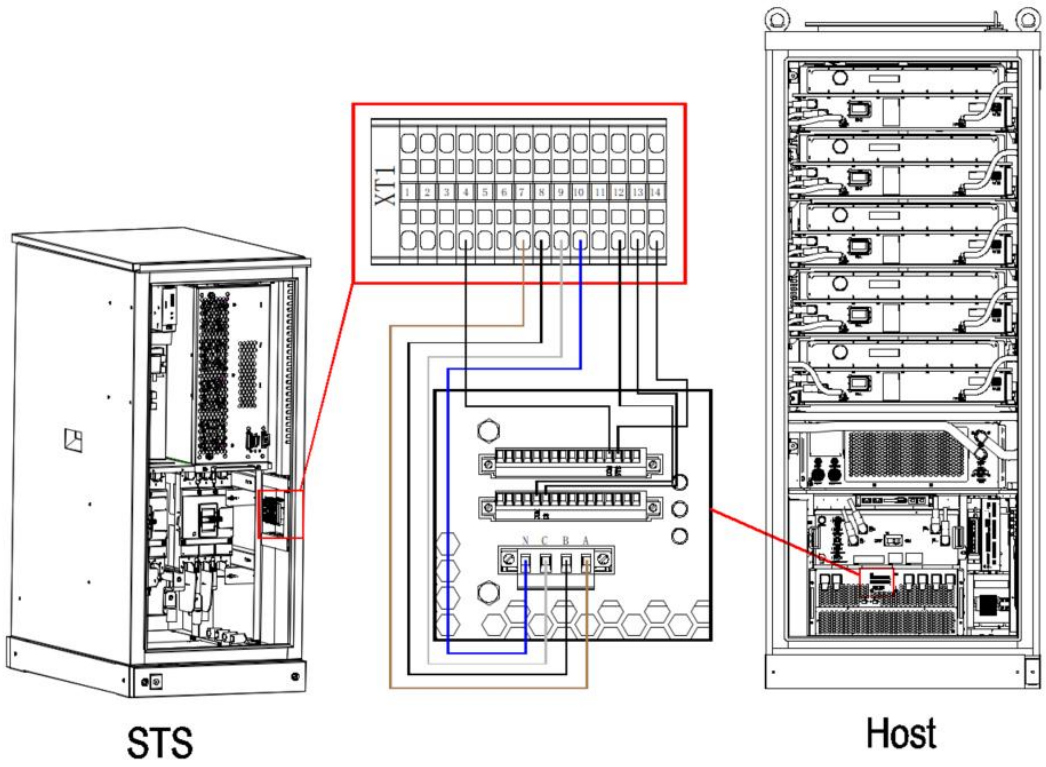

4.3.6.3 Off-Grid Parallel Host PCS to Follower PCS Communication Cable Connection

Connect the CAN communication and sync communication cables between the Host PCS and Follower PCS cabinets, according to the table below:

Host System PCS Terminal	Follower System PCS Terminal
Host PCS: SYNC+	Follower PCS: SYNC+
Host PCS: SYNC-	Follower PCS: SYNC-
Host PCS: CAN H2	Follower PCS: CAN H2
Host PCS: CAN L2	Follower PCS: CAN L2

The connection diagram is shown below(Cables in harness kit):

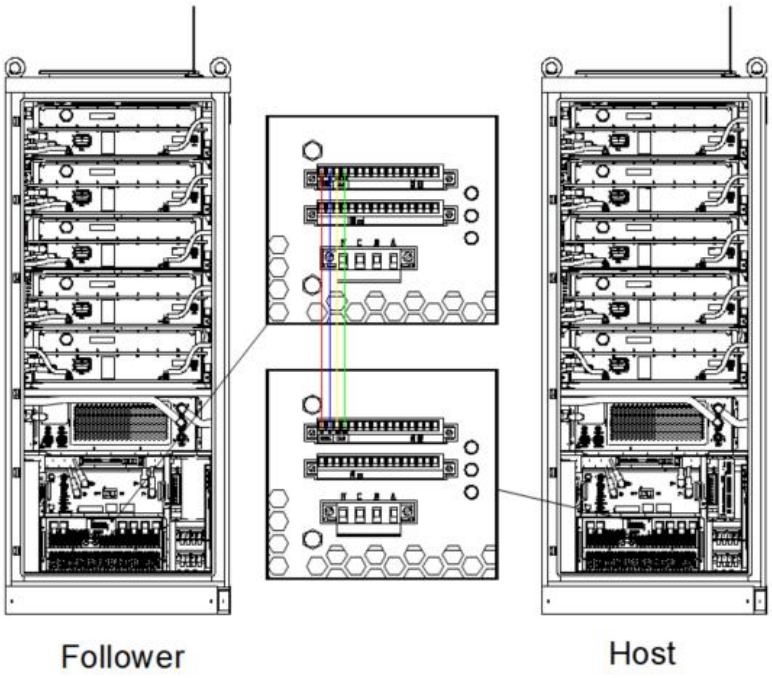

Communication cable routing is as shown below.

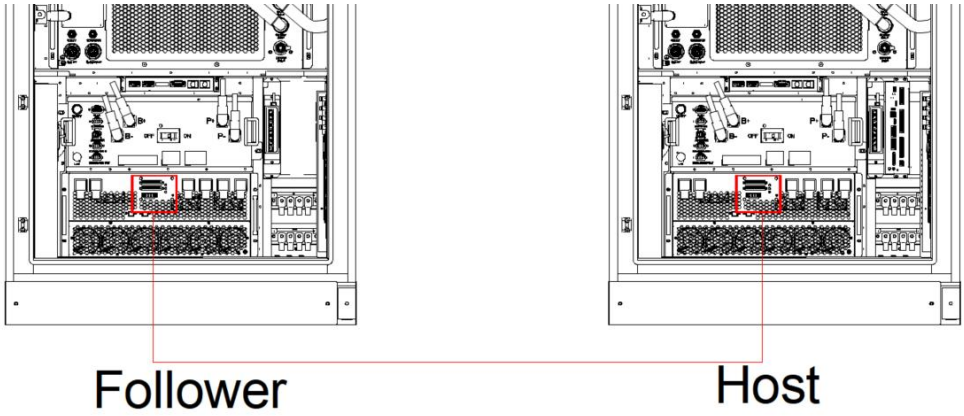

4.3.6.4 Off-Grid Parallel Other Device Communication Cable Connection

Use Ethernet cables to connect the BAMS and PCS of the follower system cabinets to the switch in the Host cabinet. The diagram is shown below(Cables in harness kit):

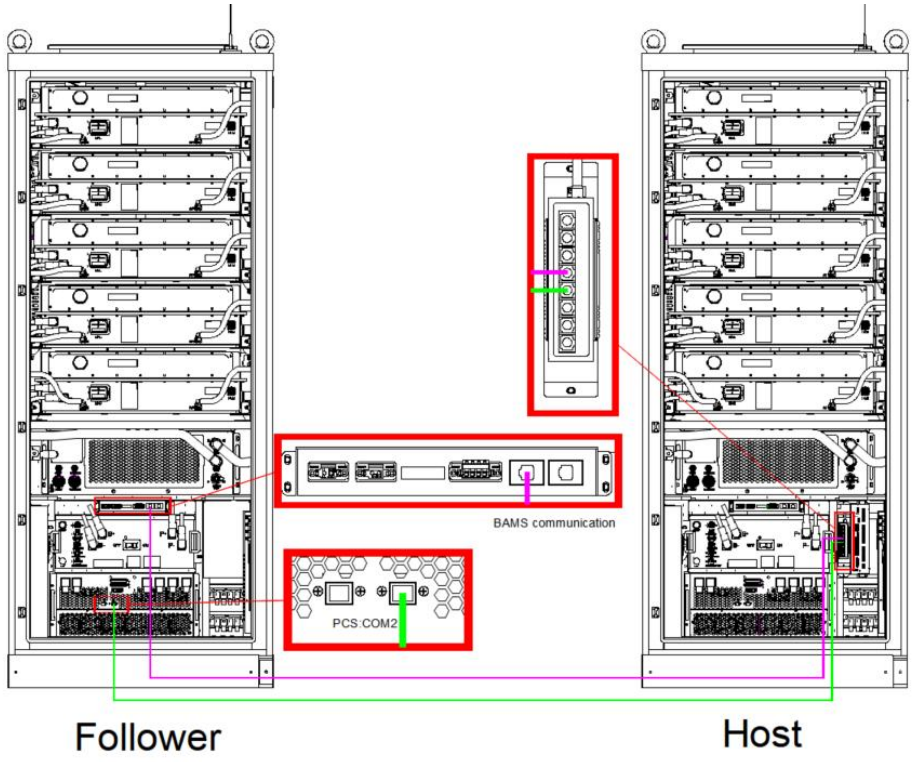

4.3.6.5 Generator Power Cable Connection

Use 2 x 95mm² or 1 x 240mm² single-core copper cables to connect the generator phases L1/L2/L3 and Neutral (N) to the cabinet breaker terminals L1/L2/L3 and N respectively. Install the generator meter as described in sections 4.3.3.2~4.3.3.4 above. The cabling diagram is shown below(Cables to be provided by the customer):

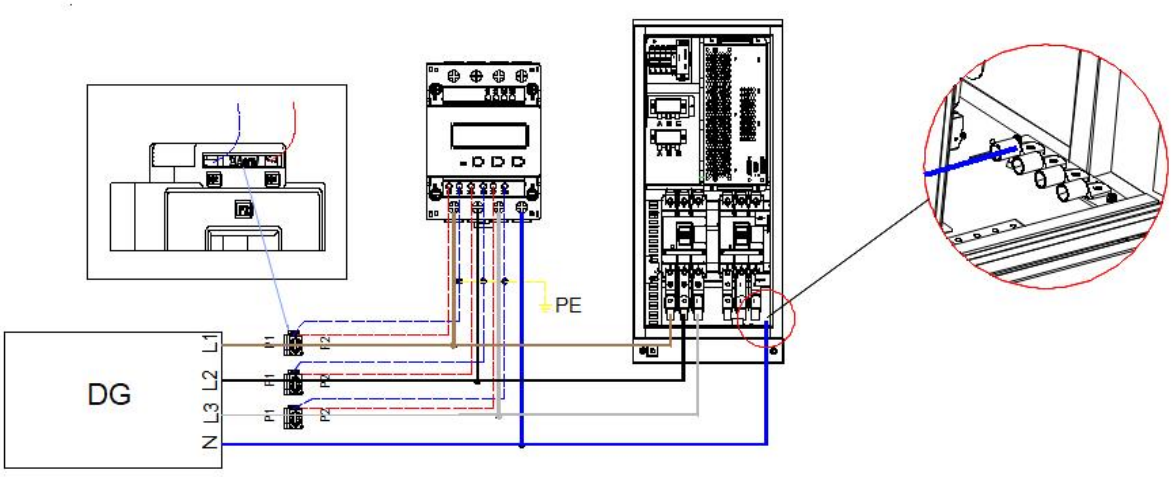

CAUTION

Using 240mm² cable requires raising the STS foundation by 300mm.

4. 3. 6. 6 Generator Dry Contact Connection

For generator dry contact cabling, connect the generator dry contacts (NO/COM) to the ALPEMS500 in the system cabinet (DO1:NO/DO1:COM). The diagram is shown below(Cables to be provided by the customer):

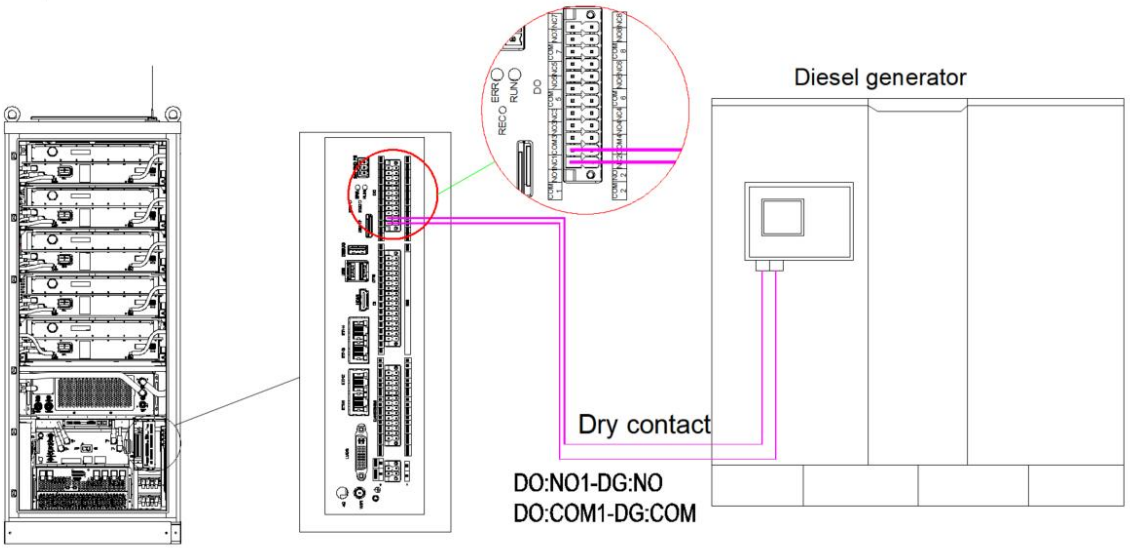

4. 3. 6. 7 Load to STS cabling

cabling for On-grid loads and off-grid loads to the STS is shown below(Cables to be provided by the customer):

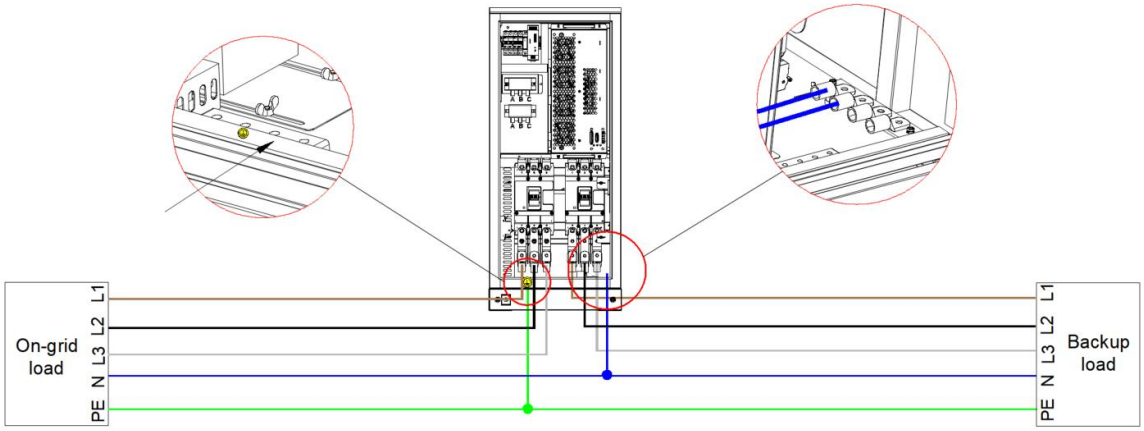

CAUTION

On-Grid loads can also be connected to the building's AC busbar.

4.3.7 DC Expansion cabling

CAUTION

Before cabling, open the cable entry holes on the system cabinet. Pass the cables through the entry holes first, then connect them to the corresponding points, as shown below.

Front Cable Entry Locations Diagram (System Cabinet)

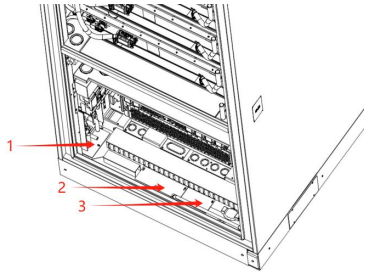

4.3.7.1 DC Expansion Cabinet to System Cabinet Power Cable Connection

1. First, remove the screws from the rear cover plate of the host system cabinet and take it off.

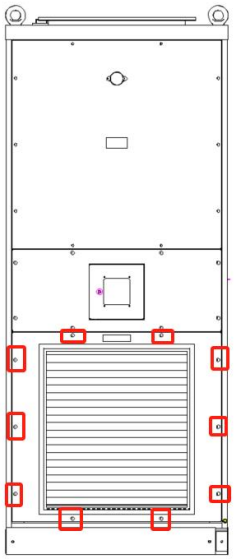

2. Remove the rear cable entry cover plate from the cabinet prior to cabling.

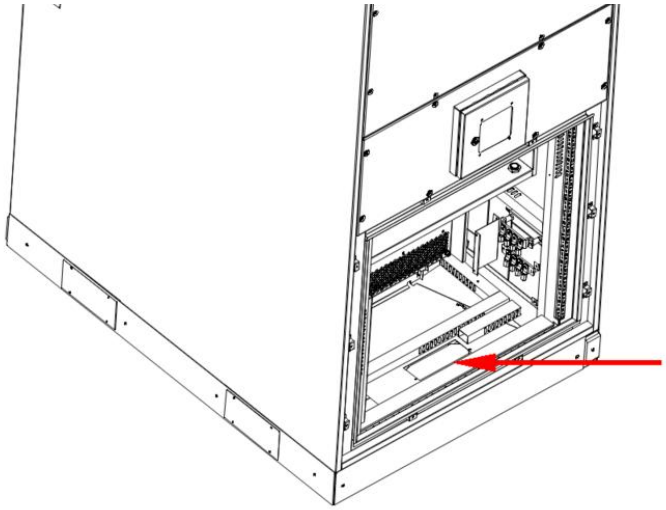

3. Use the power cable harness from the accessory kit to connect the battery cabinet's P+ and P- to the busbar in the system cabinet(Harnesses located within the battery cabinet).

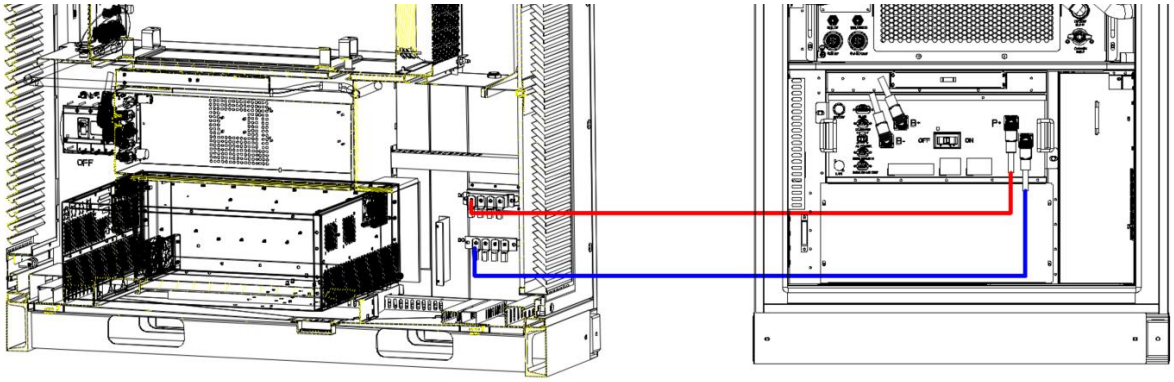

4. Install the rear cover plate onto the host system cabinet and properly secure it with the mounting screws.

4.3.7.2 Use the power cable harness from the accessory kit to connect the battery cabinet's P+ and P- to the busbar in the system cabinet.

Use the communication harness from the accessory kit to connect the battery cabinet HV-BOX's BCMU/BAMS OUT to the system cabinet HV-BOX's BCMU/BAMS IN, as shown below(Harnesses located within the battery cabinet):

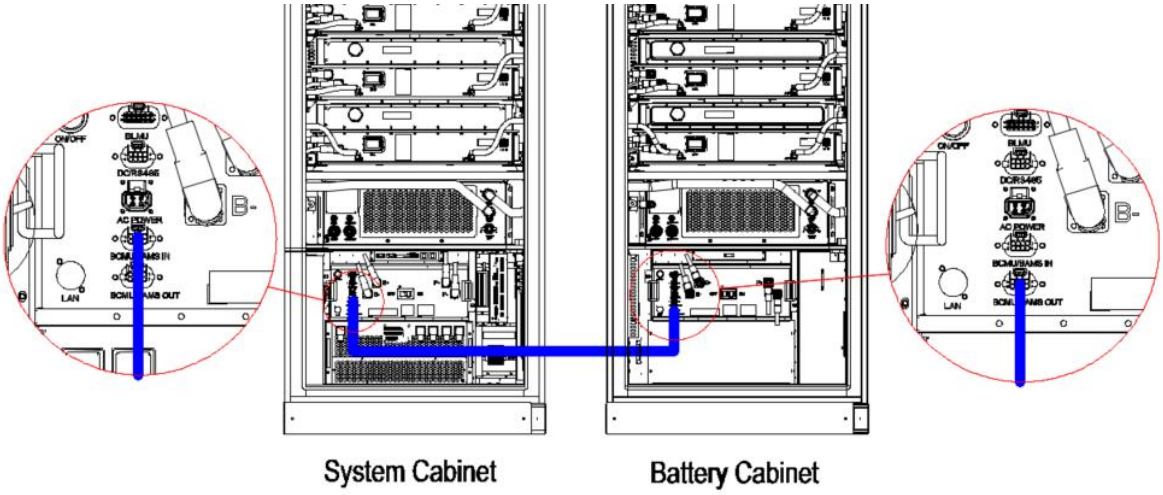

4.3.7.3 DC Expansion Cabinet Auxiliary Power Connection

Use 4mm² cables (customer supplied) to connect the system cabinet's auxiliary power supply (L and N) to the battery cabinet(Harnesses located within the battery cabinet).

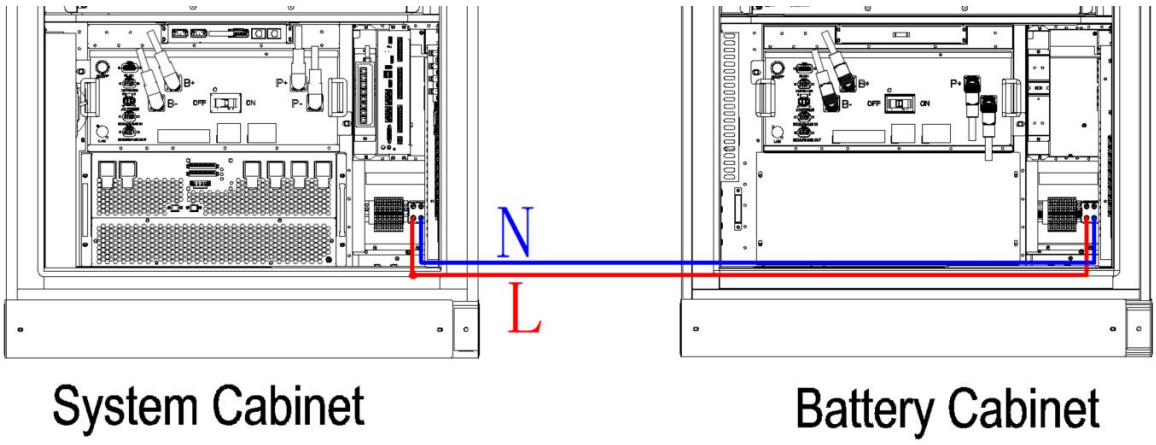

4.3.8 MSD installation

Install the MSD accessory from inside the cabinet onto the battery.

1. Unlock: pull the MSD CPA to the direction shown below, then pull the MSD unlock slider as shown below, and the MSD handle can be rotated to open and complete the unlock

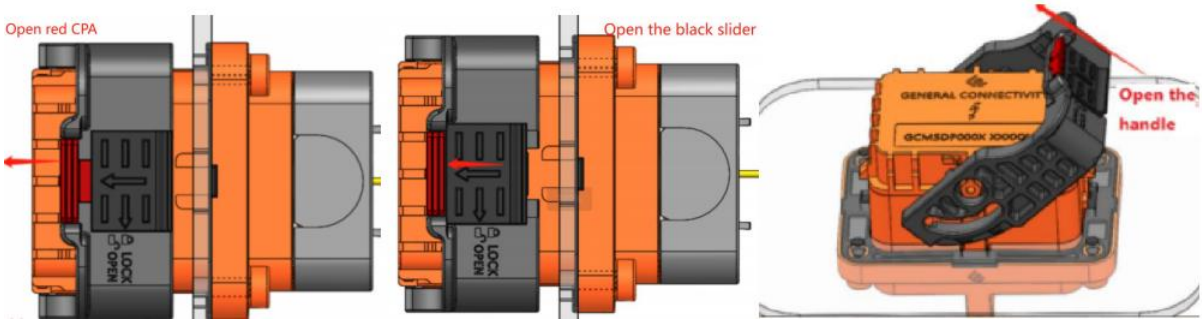

2. Plug the MSD securely into the battery.

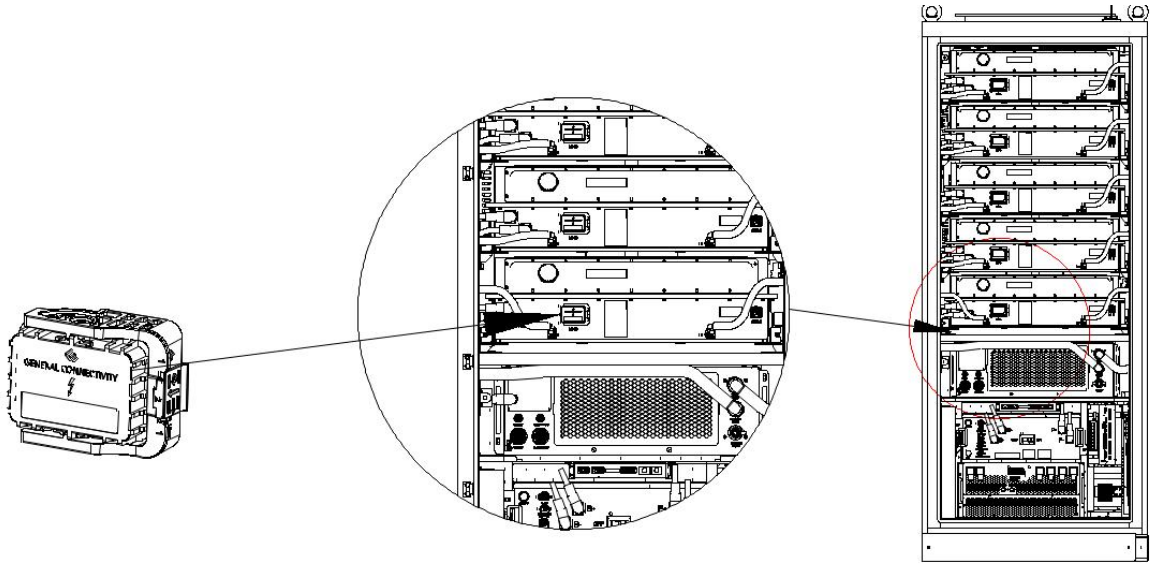

Assembly Diagram.

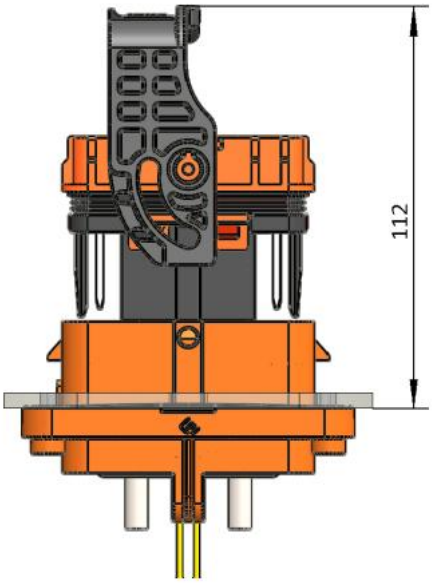

3. Unplug the MSD from the battery in reverse order of the above sequence, disengaging the locking mechanism first.

5. Startup and Operation

After the system cabling is completed, perform the following steps before proceeding with the operation:

1. Measure the input voltage of the high-voltage box with a multimeter. The voltage range is detailed in the system normal voltage range table at the end of the document.
2. In addition, use an insulation meter to measure the insulation resistance (B+ to ground/B- to ground) of the input terminal of the high-voltage box, with an insulation resistance of ≥ 1 MΩ.
3. For more information, see the operation manual.

6. Technical Contact

If you have any technical issues with our products, please contact us. The contact information can be found on the front page of this manual. To help us quickly resolve your issue, please provide the following information:

A. System configuration
B. Product serial number
C. Software version number
D. Fault information
E. Photovoltaic module information

7. Attachment

System Installation of a Torque Wrench

Number	Location	Specification & Material	Qty	Torque (Nm)
1	Cover Plate Fixing Screw	Cross Pan Head M4 Screw, Stainless Steel	4 pcs	1.5 ±10%
2	External Grounding Fixing	M8 Stainless Steel 304, Hex Bolt w/ Spring & Flat Washer	1 pcs	12 ±10%

NOTE

Please follow the recommended torque values in the table. If there are any special or abnormal situations, please provide your feedback to an AlphaESS engineer.

System Normal Voltage Range Table

Model	STORION-LC-TB125
Rated Voltage (V)	832